EE 230 - Analog Lab
Wadhwani Electronics Laboratory
Electrical Engineering IIT Bombay

Lab:2

Instructions:

- Write down all your observations in notebook.
- Verify your calculations with your respective TA.

Objectives:

- Familiarizing with Operational Amplifier(OpAmp) based Negative feedback circuits.
- Understanding how OpAmp can be used to implement various mathematical operations.
- Designing of positive feedback OpAmp-based circuit.
- Understanding the feedback factor in OpAmp circuits.

---

1. **OpAmp based Negative feedback circuits**

   (a) **Inverting Amplifier circuit**

   i. The inverting amplifier circuit is shown in Fig. [1] with $R_1 = 1k\Omega$, $R_2 = 10k\Omega$. Apply a sinusoidal input with a peak of $0.1V$ and frequency $1kHz$.
   Plot V_i and V_o versus time. Apply the supply voltage of $\pm 15V$. Do not connect R_L explicitly, DSO itself will act as a load while measuring the output.

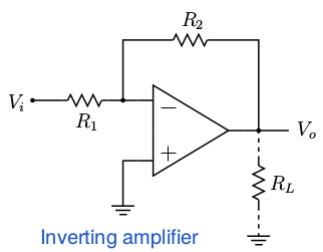

Figure 1: Inverting amplifier

   ii. Now, vary the input amplitude from 0.1 V to 2 V and observe the output waveform. Explain what happens to output voltage after a particular value of input voltage.

   (b) **Differentiator**

   i. The Differentiator circuit is shown in the Fig. [2] with a triangular wave input (±2V, 2.5kHz), R = 10kΩ, C = 0.01µF. Observe the output waveform on DSO. Plot the input and output waveforms as a function of time in your notebook and explain the type of output waveform observed.

   ii. Now, connect a small capacitor C = 0.001µF in parallel with R, and observe $V_o(t)$. Explain what difference you observe in output waveform as compared to (i).

   (c) **Summer Amplifier Circuit**

   i. The Op-Amp based circuit shown in Fig. [3] can be used as a summer. This circuit takes two inputs X_1 and X_2 and is required to give an output of $V_0 = -2(X_2 + X_1/2)$

   ii. Design the values of R_1, R_2 and R_3.

   iii. Assemble the circuit as shown in Fig. [3] and apply X_1 and X_2 as two sinusoidal voltage signal with $4V_{PP}$ and $2V_{PP}$ amplitudes respectively and frequency of 500 Hz.

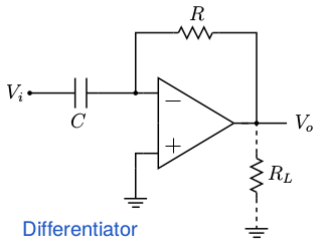

Figure 2: Differentiator

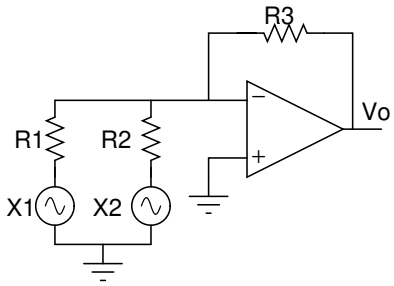

Figure 3: Summer Circuit Using Op-Amp

iv. Plot the input X_1 and output V_0 and comment on the output voltage amplitude.

(d) **Equation Solver**

i. Design a circuit that performs the following mathematical computation

$$V_0 = -(0.0001\frac{\mathrm{d}}{\mathrm{d}t}X_1 + 2X_2)$$

Draw a clean circuit and note down the values of components used.

ii. Mathematically, drive expression of the expected output.
Hint:

$$a * \sin(x) + b * \cos(x) = (\sqrt{a^2 + b^2}) * \sin(x + \tan^{-1}(a/b))$$

iii. Take

$$X_1 = 10 * \sin(2 * \pi * 500 * t)$$

$$X_2 = 2.5 * \sin(2 * \pi * 500 * t)$$

and plot the output V_0 on DSO. Note down the waveform and report its Vpp and frequency.

2. **OpAmp Based Positive Feedback Circuits**

(a) **Schmitt Trigger Circuit**

i. Design the Schmitt trigger circuit shown in the Fig. [4] for upper threshold value (V_{TH}) of 2.5V and lower threshold value (V_{TL}) of -2.5V. Assume $V_a = 0V(GND)$. Use dual supply of $\pm 15V$ for the Op-amp 741.

ii. Apply a sinusoidal input ($10V_{pp}, 1kHz$) and observe $V_o(t)$.

iii. Compare the observed threshold voltages V_{TH} and V_{TL} with the design specification.

iv. Now, keeping resistor values same as above calculate the new threshold values for $V_a = 2V$.

v. Now repeat the steps (ii) and (iii).

vi. If we want V_{TH} and V_{TL} to be robust and not change with the change/variations in Opamp then is this a good design of the Schmitt trigger?

(b) **Modified Schmitt Trigger Circuit**

A modified Schmitt Trigger circuit is shown in Fig. [5].

i. What is the purpose of R'. What if R' = 0 ?

ii. Connect the circuit as shown in Fig. [5]. D_1 and D_2 are 4.7 V, Zener diode.

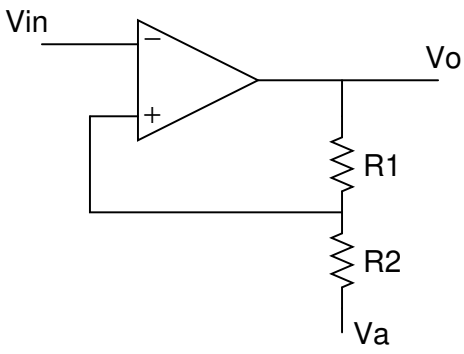

Figure 4: Schmitt Trigger

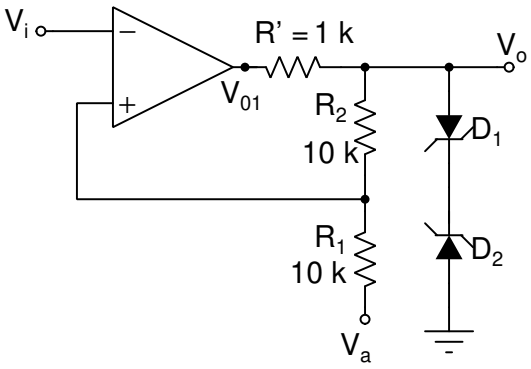

Figure 5: Schmitt Trigger with zener diode at output

iii. Apply a sinusoidal input $(10V_{pp}, 1kHz)$ and observe $V_o(t)$ for $V_a = 0V(GND)$.

iv. Compare the threshold voltages V_{TH} and V_{TL} with the values you expected theoretically.

3. **OpAmp Based Feedback circuit**

   i. What type of feedback circuit is shown in Fig. [6]? $R_1 = 1k\Omega$, $R_2 = 10k\Omega$, $R_3 = 100k\Omega$, $R_4 = 1k\Omega$.

   ii. Apply a sinusoidal input with a peak of $0.1V$ and frequency $1kHz$. Plot V_i and V_o as a function of time. Apply the supply voltage of $\pm 15V$.

   iii. What type of feedback circuit is shown in Fig. [6]. $R_1 = 1k\Omega$, $R_2 = 100k\Omega$, $R_3 = 10k\Omega$, $R_4 = 1k\Omega$.

   iv. Apply a sinusoidal input with a peak of $0.1V$ and frequency of $1kHz$. Plot V_i and V_o as a function of time. Apply the supply voltage of $\pm 15V$.

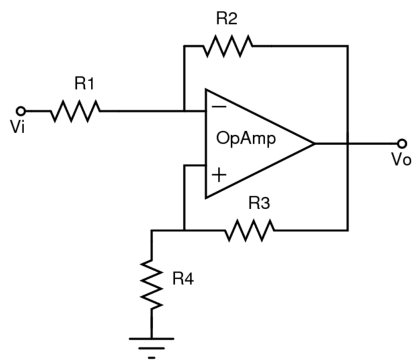

Figure 6: OpAmp based feedback circuits

Pin diagram of op-amp

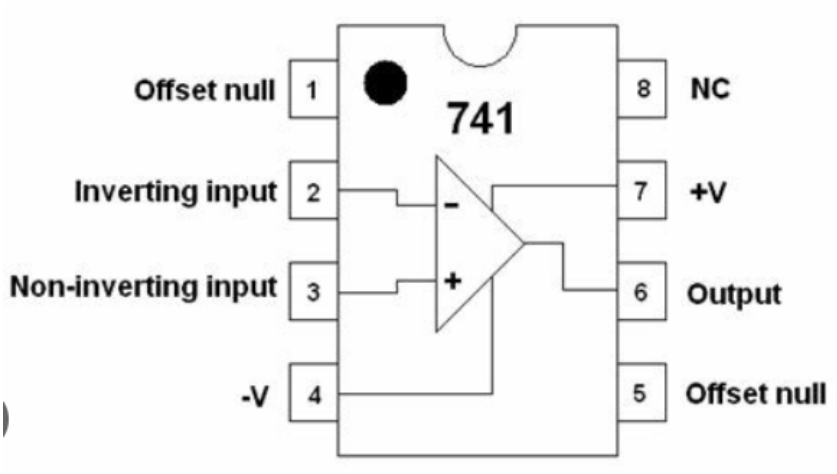

Figure 7: IC 741