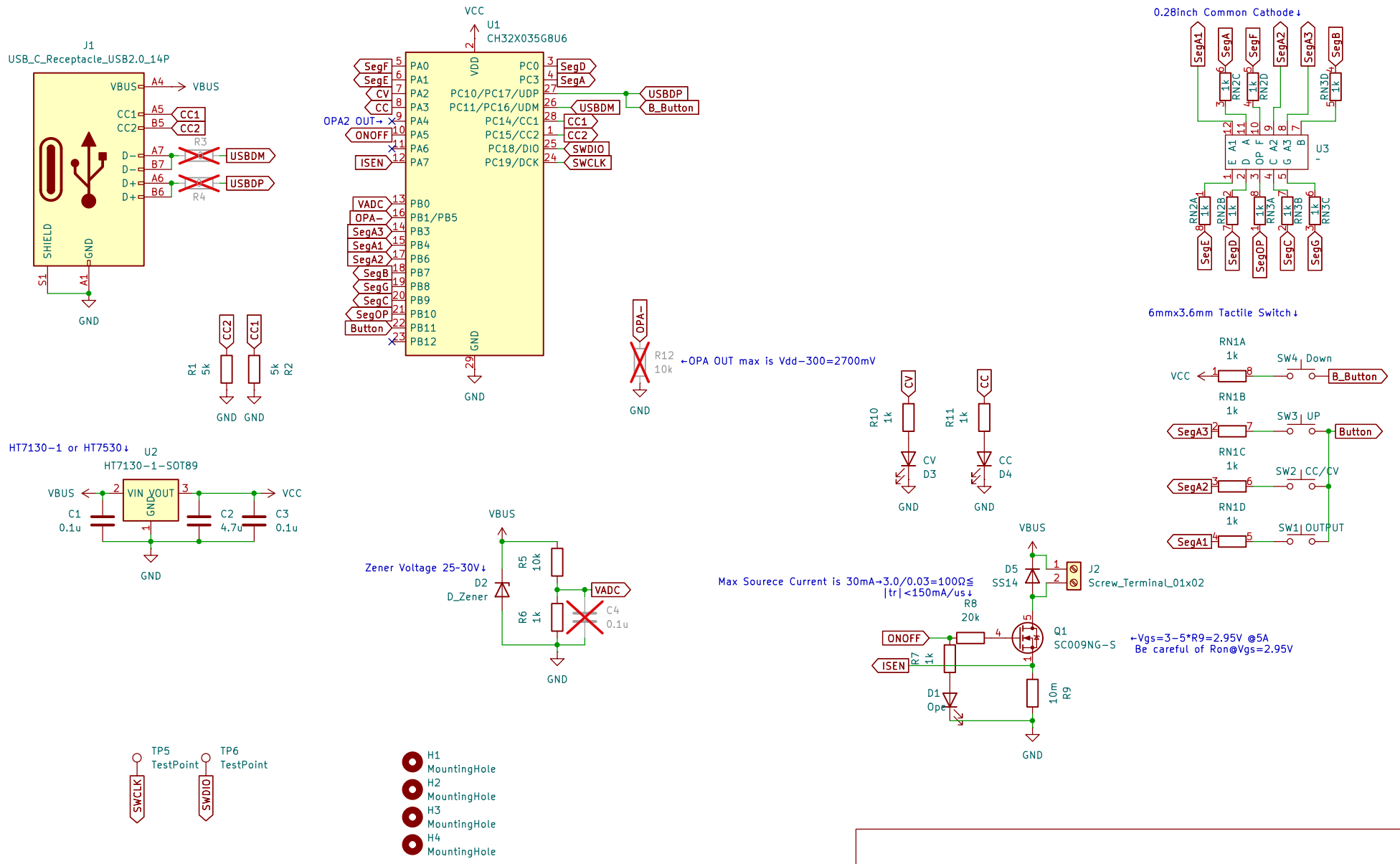

Unagi Dojyou

Sheet: /

File: PPS可変電源.kicad_sch

Title: PD−PPS VariablePowerSupply

Size: A4	Date:	**Rev: V3**
KiCad E.D.A. 9.0.4		Id: 1/1