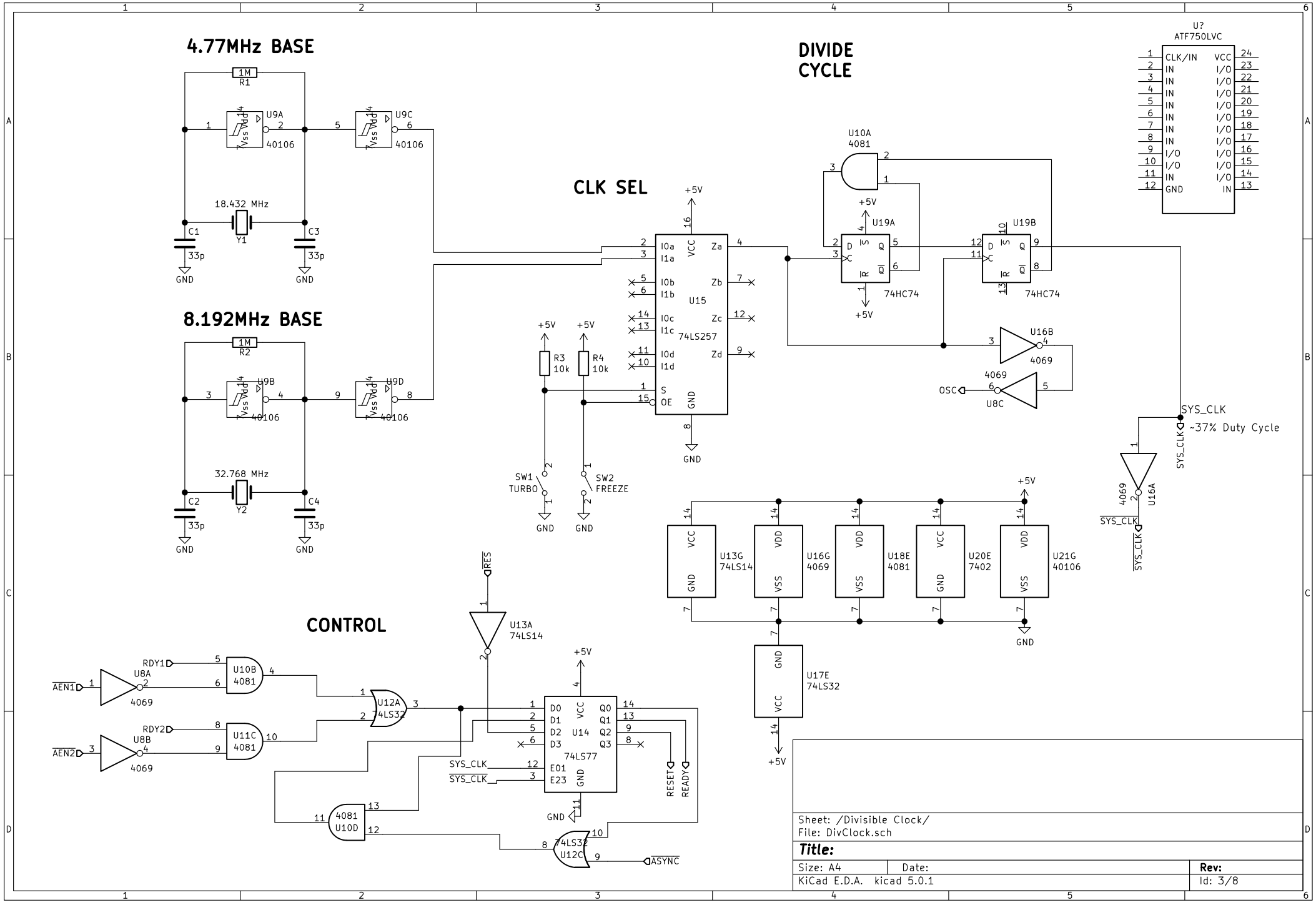


Sheet: /Divisible Clock/
File: DivClock.sch

**Title:**

| Size: A4 | Date: | Rev: |
|---|---|---|
| KiCad E.D.A. kicad 5.0.1 | | Id: 3/8 |