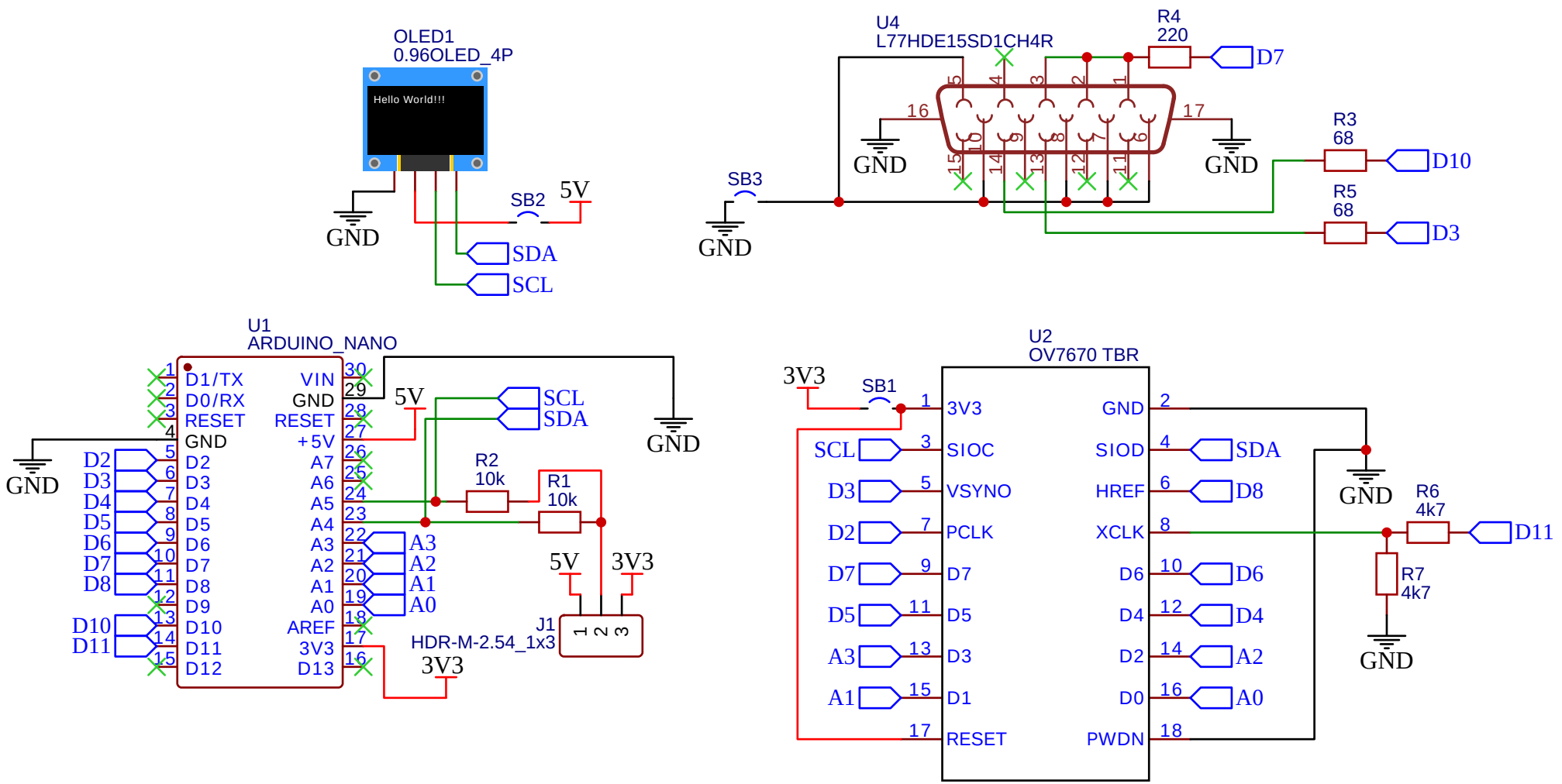

TITLE: Ethan 2023	REV: 1.0
Company: github.com/UnethicalBear	Sheet: 1/1
Date: 2023-05-23 Drawn By:	