USB, POWER PATHS, CHARGING AND FILTERING

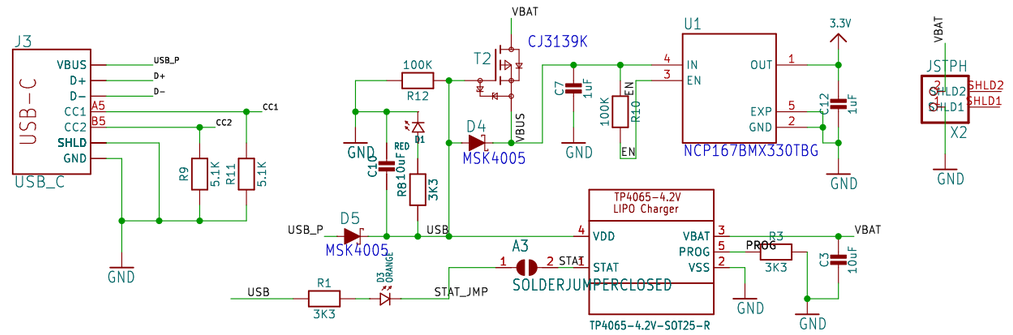

SENSE IO

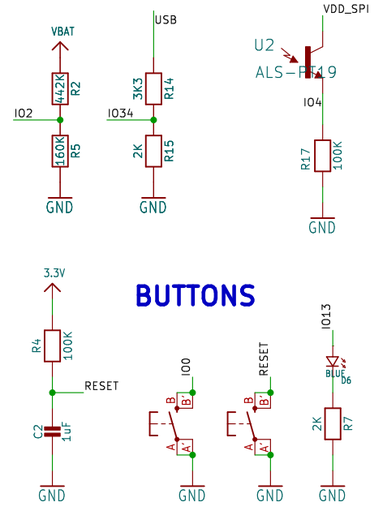

LIGHT SENSOR

BUTTONS

LDO2 & AUTO-SHUTDOWN

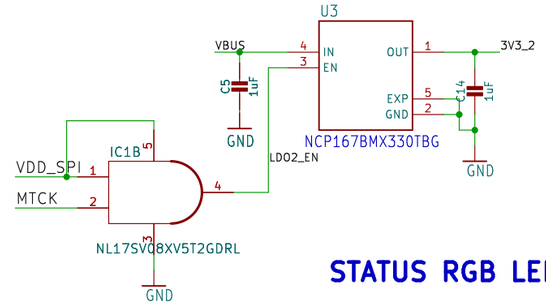

STATUS RGB LED

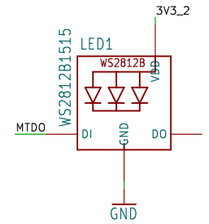

ESP32-S3

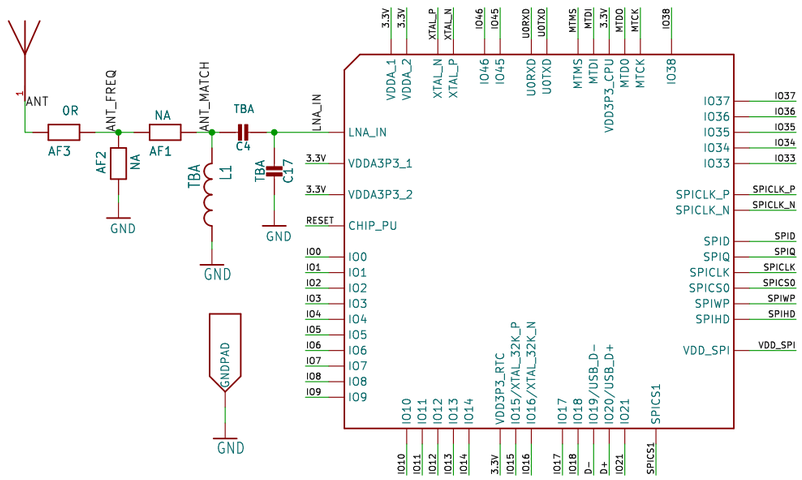

EXTERNAL CRYSTAL

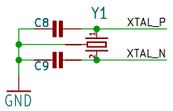

RESET DBL PRESS

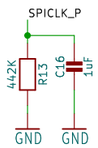

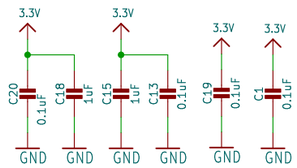

EXTERNAL FLASH & PSRAM

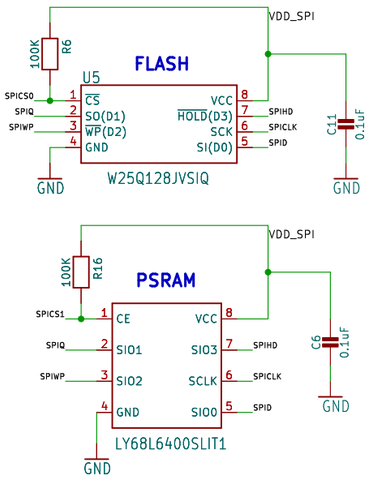

VERTICAL STEMMA CONNECTED TO LDO2

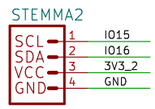

HORIZONTAL STEMMA CONNECTED TO LDO1

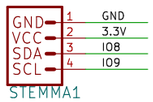

HEADERS

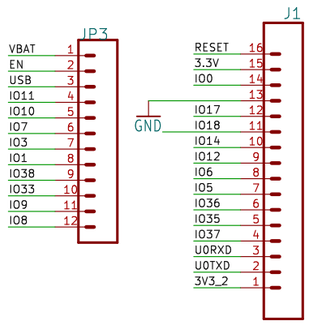

FeatherS3

Unexpected Maker

Sheet: /

File: FeatherS3_P8_V2_AT2450AT18B100.kicad_sch

Title: FeatherS3

Size: A3	Date: 2024-06-31	Rev: P8
KiCad E.D.A. 9.0.4		Id: 1/1