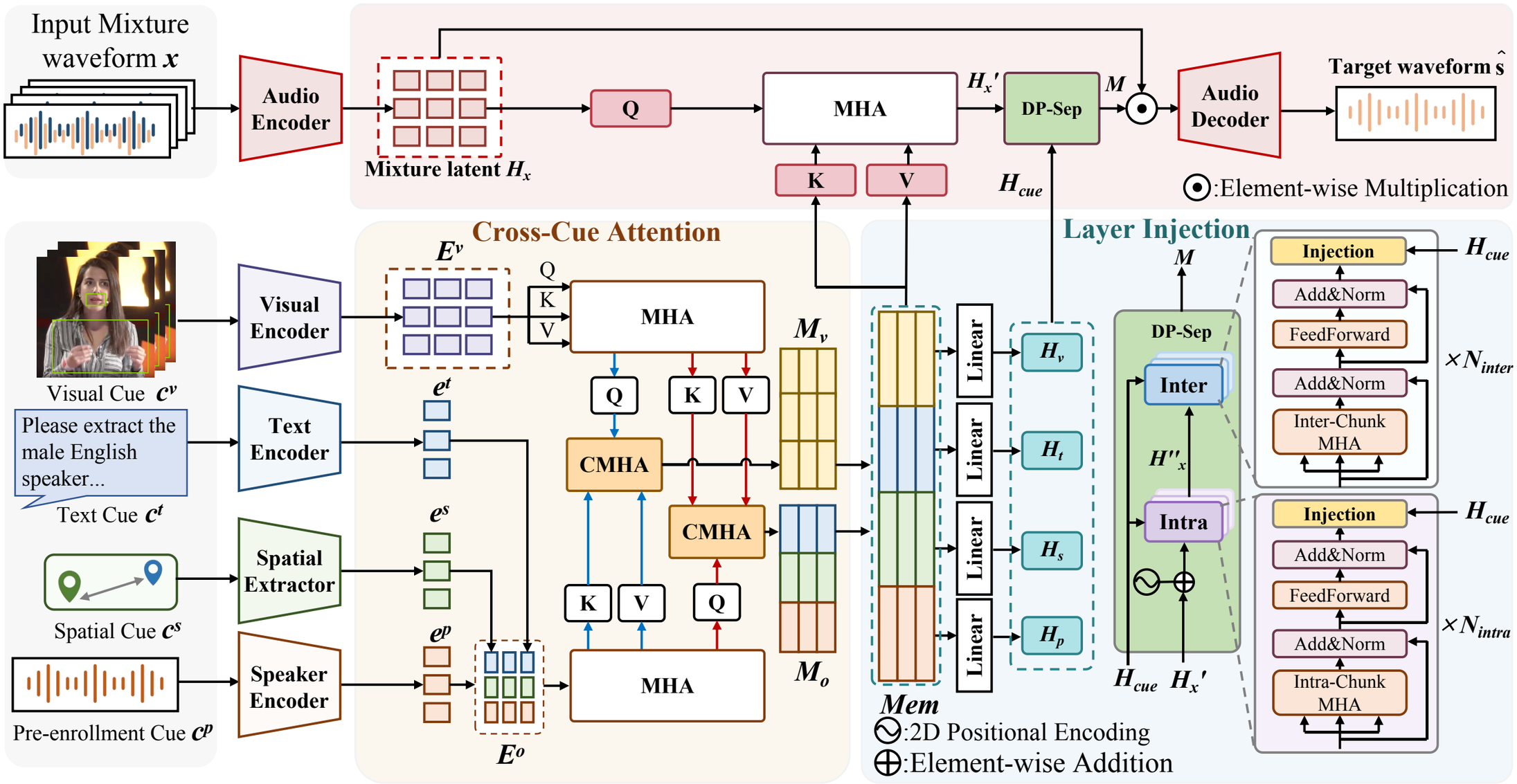
Input Mixture waveform x
Audio Encoder
Mixture latent H_x
Q
MHA
K
V
H_x'
DP-Sep
M
H_{cue}
Audio Decoder
Target waveform ŝ
⊙:Element-wise Multiplication
Visual Cue c^v
Please extract the male English speaker...
Text Cue c^t
Spatial Cue c^s
Pre-enrollment Cue c^p
Visual Encoder
Text Encoder
Spatial Extractor
Speaker Encoder
Cross-Cue Attention
E^v
e^t
e^s
e^p
E^o
CMHA
M_v
M_o
Layer Injection
Linear
H_v
H_t
H_s
H_p
Mem
DP-Sep
Inter
Intra
H''_x
Injection
Add&Norm
FeedForward
Inter-Chunk MHA
Intra-Chunk MHA
$\times N_{inter}$
$\times N_{intra}$
:2D Positional Encoding
⊕:Element-wise Addition