EDES 301

PCB Project

Pedro Cardon Unikovski

Due 05/05/2025 @ 11:59pm

Background Information

- Create a PCB for an “Etch-a-Sketch”
- Hardware:
  - SPI Display Screen
  - Two Potentiometers
  - Two Buttons (Reset the Game, Change Color)
  - Three LEDs (Red, Green, and Blue for Color)
  - USB Port (Expansion)

System Block Diagram – “Etch-a-Sketch”

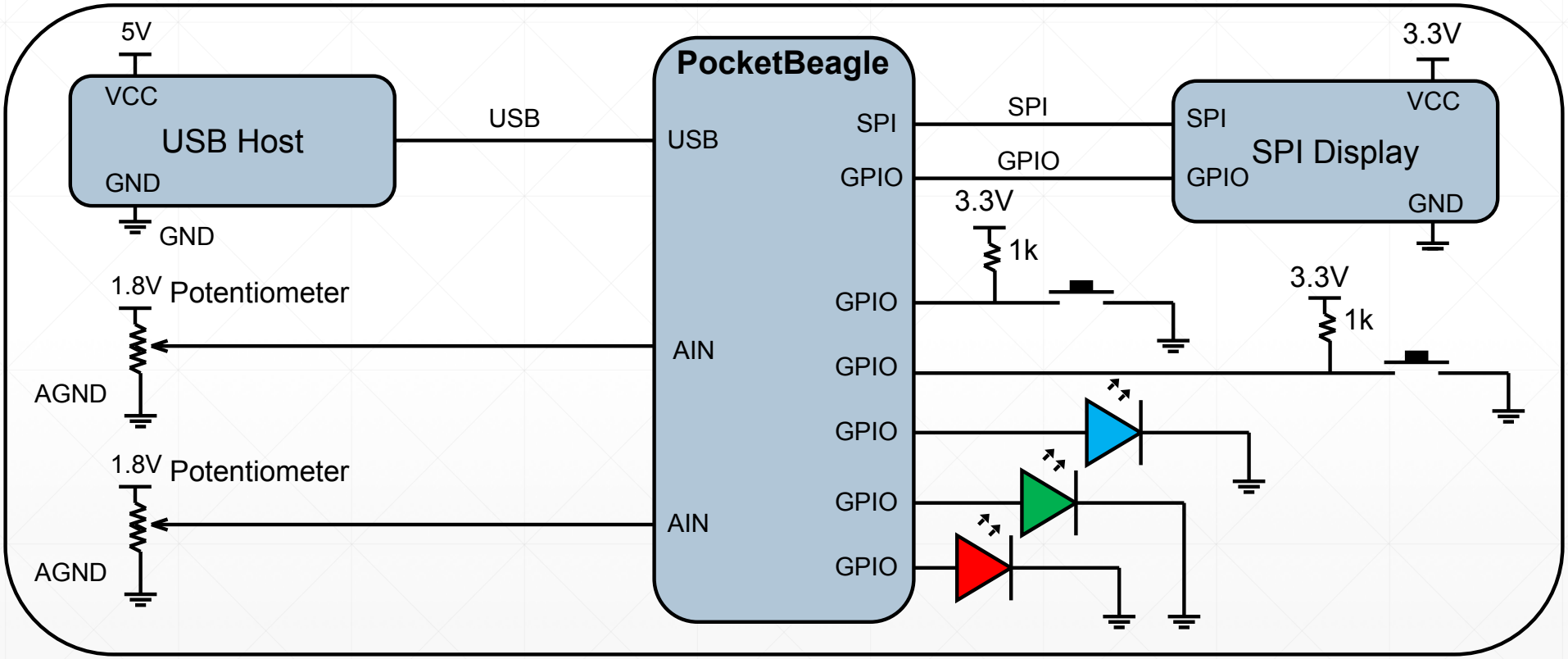

Mechanical Drawing

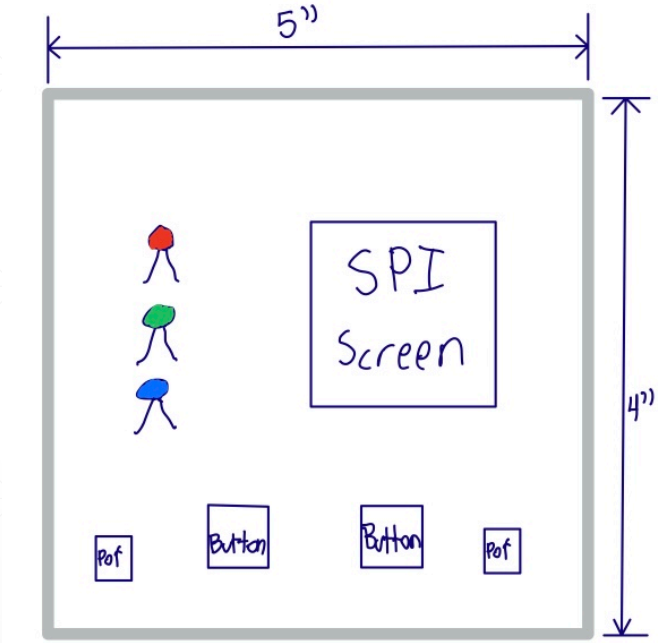

FRONT

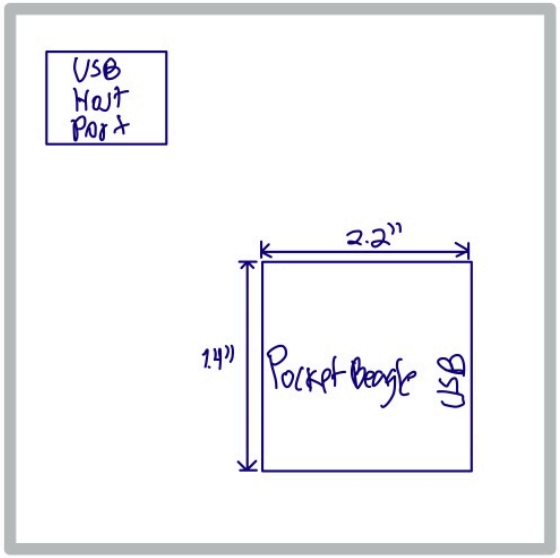

BACK