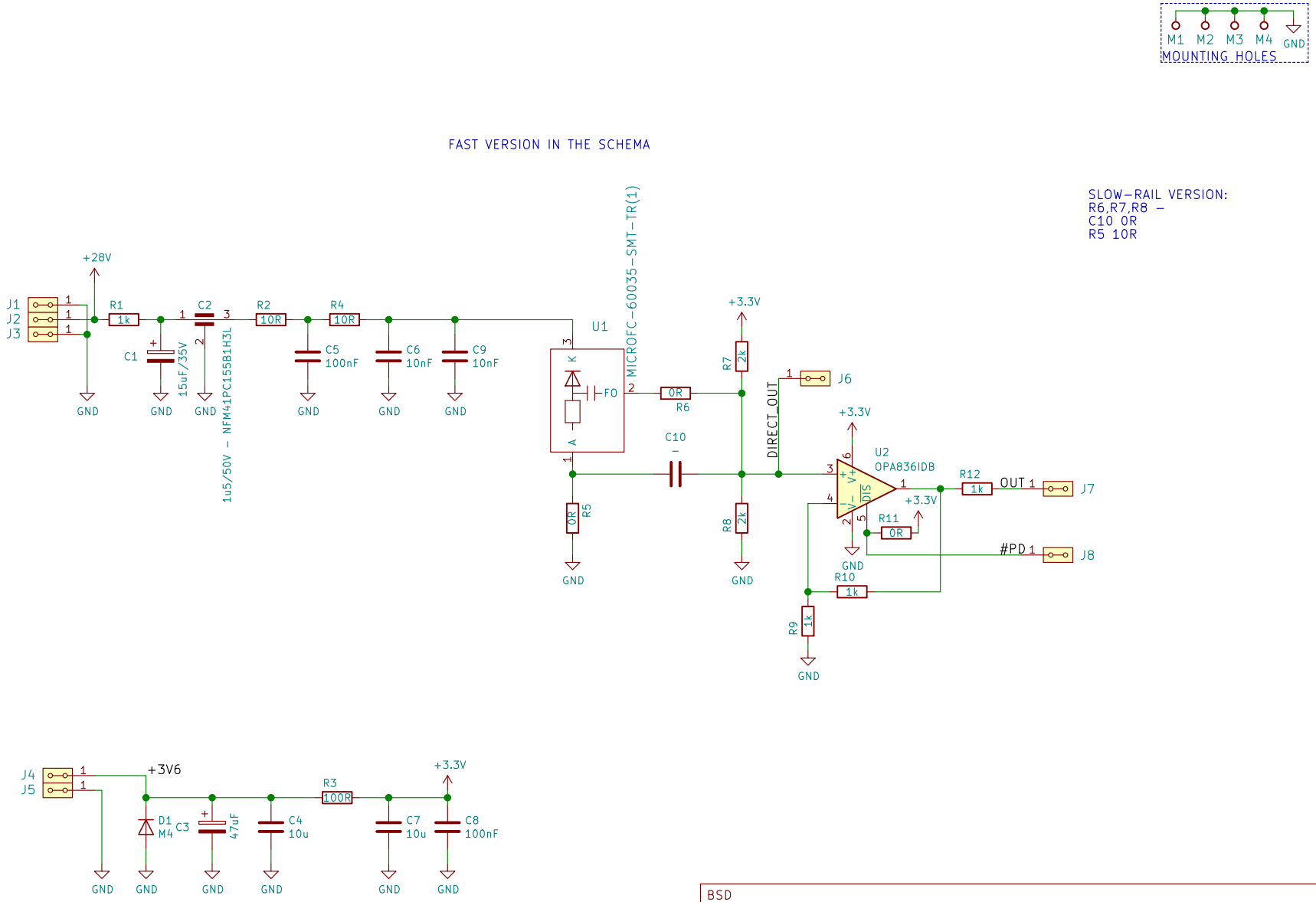


BSD

nickname <email@example.com>
Short description
Two lines are maximum
VERSION

**Mlab www.mlab.cz**

Sheet: /
File: AIRDOSC01A_PCB01A.sch

***Title: NAME***

| | | |
|---|---|---|
| Size: A4 | Date: %F | **Rev: REV** |
| KiCad E.D.A. kicad (6.0.0-rc1-dev-205-gc0615c5ef) | | Id: 1/1 |