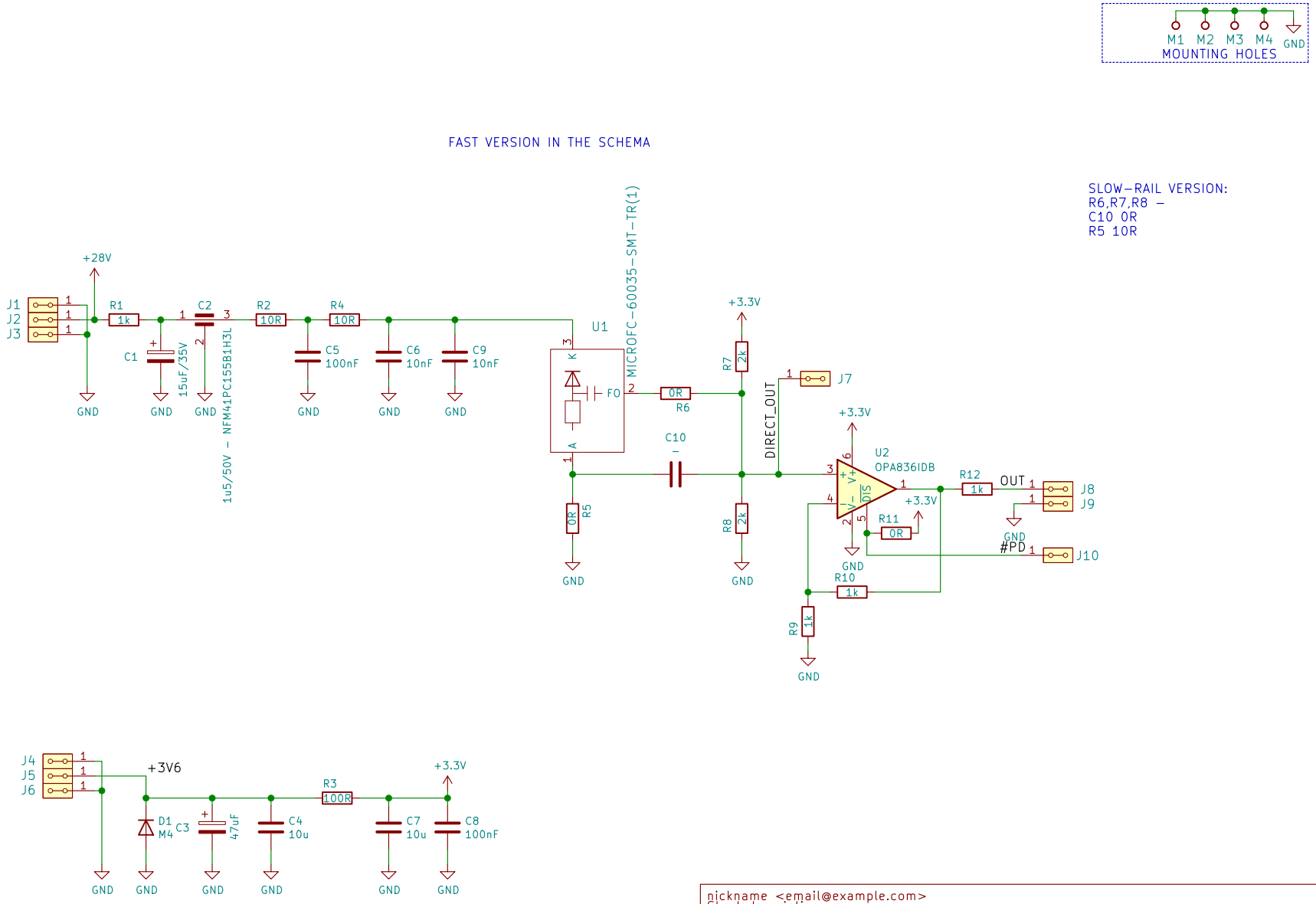

nickname <email@example.com>
Short description
Two lines are maximum
VERSION

Mlab www.mlab.cz

Mlab www.mlab.cz

Sheet: /
File: AIRDOSC01A_PCB01B.kicad_sch

Title: NAME

Size: A4	Date: %F	**Rev: REV**
KiCad E.D.A. kicad (5.99.0-9154-g0d2ee266a1)		Id: 1/1