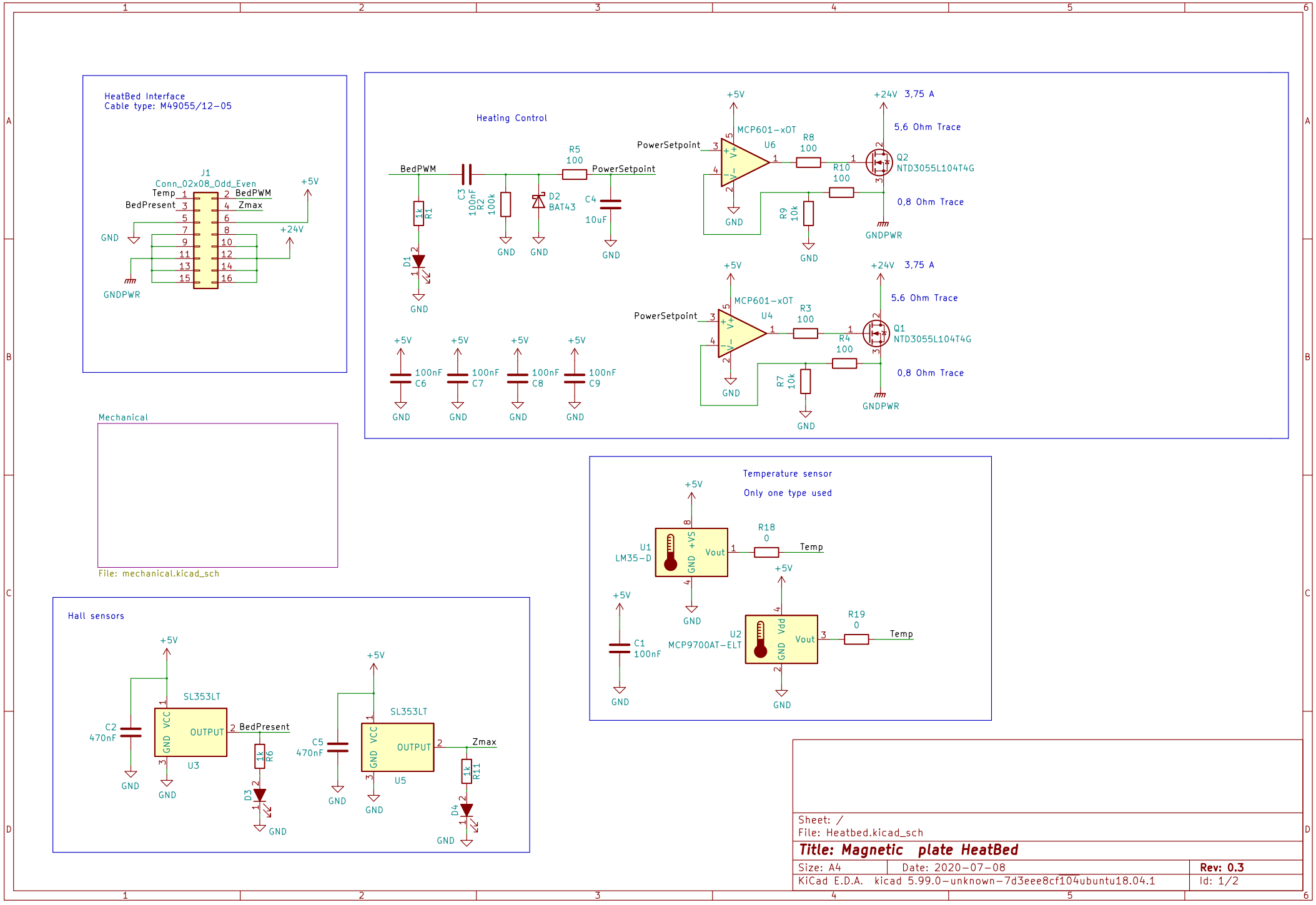

Sheet: /
File: Heatbed.kicad_sch

Title: Magnetic plate HeatBed

Size: A4	Date: 2020-07-08	Rev: 0.3
KiCad E.D.A. kicad 5.99.0-unknown-7d3eee8cf104ubuntu18.04.1		Id: 1/2

HeatBed Mount Holes

H1
M4 Mounting Hole

H2
M4 Mounting Hole

H3
M4 Mounting Hole

H4
M4 Mounting Hole

H5
M4 Mounting Hole

H6
M4 Mounting Hole

H7
M4 Mounting Hole

H8
M4 Mounting Hole

H9
M4 Mounting Hole

H10
Print_plate_arangement_screw

H11
Print_plate_arangement_screw

KV-20-04-03-N KV-20-04-03-N KV-20-04-03-N KV-20-04-03-N KV-20-04-03-N KV-20-04-03-N KV-20-04-03-N
KV-20-04-03-N KV-20-04-03-N KV-20-04-03-N KV-20-04-03-N KV-20-04-03-N KV-20-04-03-N KV-20-04-03-N
KV-20-04-03-N KV-20-04-03-N KV-20-04-03-N KV-20-04-03-N KV-20-04-03-N KV-20-04-03-N KV-20-04-03-N
KV-20-04-03-N KV-20-04-03-N KV-20-04-03-N KV-20-04-03-N KV-20-04-03-N KV-20-04-03-N KV-20-04-03-N
KV-20-04-03-N KV-20-04-03-N KV-20-04-03-N KV-20-04-03-N

Sheet: /Mechanical/
File: mechanical.kicad_sch

Title:

Size: A4	Date:	**Rev:**
KiCad E.D.A. kicad 5.99.0-unknown-7d3eee8cf104ubuntu18.04.1		Id: 2/2