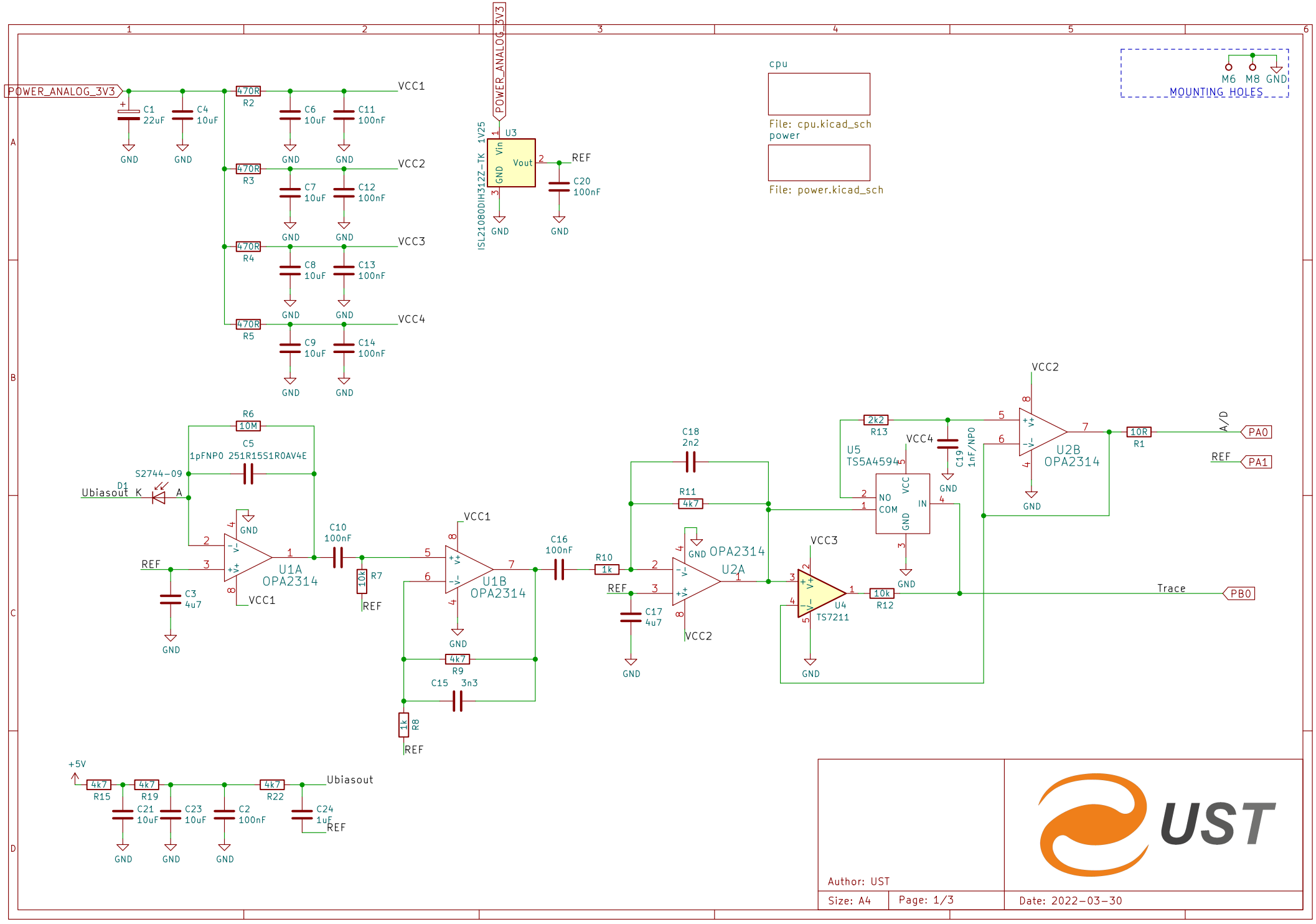
POWER_ANALOG_3V3
C1 22uF
C4 10uF
470R R2
470R R3
470R R4
470R R5
C6 10uF
C11 100nF
C7 10uF
C12 100nF
C8 10uF
C13 100nF
C9 10uF
C14 100nF
VCC1
VCC2
VCC3
VCC4
GND
U3
ISL21080DIH312Z-TK 1V25
Vin
Vout
REF
C20 100nF
cpu
File: cpu.kicad_sch
power
File: power.kicad_sch
M6 M8 GND
MOUNTING HOLES
R6 10M
C5 1pFNP0 251R15S1R0AV4E
S2744-09
D1
Ubiasout
K
A
U1A OPA2314
C3 4u7
C10 100nF
R7 10k
U1B OPA2314
R9 4k7
C15 3n3
R8 1k
C16 100nF
R10 1k
C18 2n2
R11 4k7
C17 4u7
U2A OPA2314
U5 TS5A4594
NO
COM
VCC
IN
2k2 R13
C19 1nF/NP0
U4 TS7211
10k R12
U2B OPA2314
10R R1
A/D
PA0
PA1
Trace
PB0
+5V
4k7 R15
4k7 R19
4k7 R22
C21 10uF
C23 10uF
C2 100nF
C24 1uF
Ubiasout
Author: UST
Size: A4
Page: 1/3
Date: 2022-03-30
UST

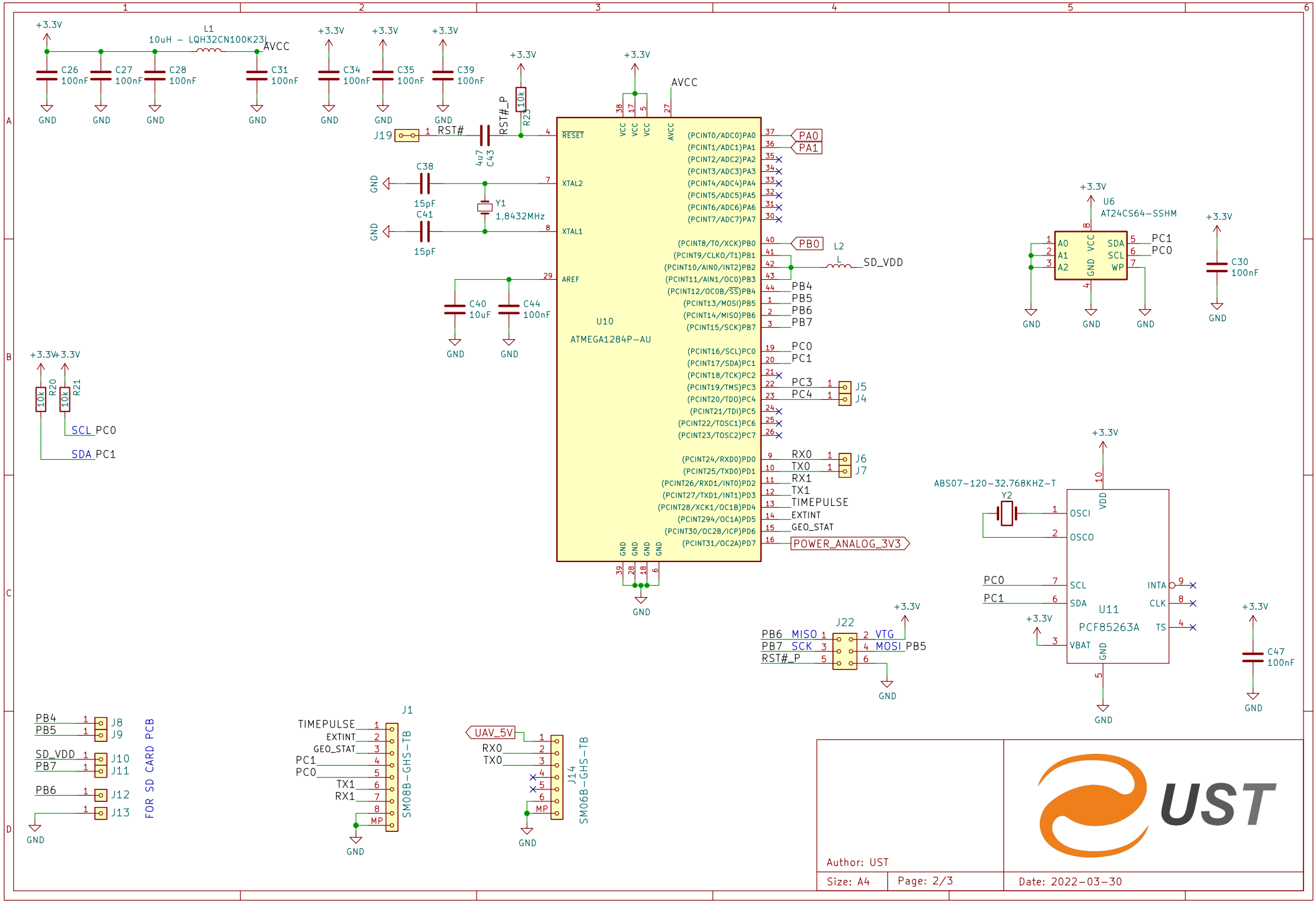
+3.3V
L1
10uH – LQH32CN100K23L
AVCC
C26 100nF
C27 100nF
C28 100nF
C31 100nF
C34 100nF
C35 100nF
C39 100nF
GND
J19
RST#
RST#_P
R23 10k
4u7 C43
C38 15pF
C41 15pF
Y1 1,8432MHz
XTAL2
XTAL1
RESET
AREF
C40 10uF
C44 100nF
U10
ATMEGA1284P–AU
(PCINT0/ADC0)PA0
(PCINT1/ADC1)PA1
(PCINT2/ADC2)PA2
(PCINT3/ADC3)PA3
(PCINT4/ADC4)PA4
(PCINT5/ADC5)PA5
(PCINT6/ADC6)PA6
(PCINT7/ADC7)PA7
(PCINT8/T0/XCK)PB0
(PCINT9/CLKO/T1)PB1
(PCINT10/AIN0/INT2)PB2
(PCINT11/AIN1/OC0)PB3
(PCINT12/OC0B/SS)PB4
(PCINT13/MOSI)PB5
(PCINT14/MISO)PB6
(PCINT15/SCK)PB7
(PCINT16/SCL)PC0
(PCINT17/SDA)PC1
(PCINT18/TCK)PC2
(PCINT19/TMS)PC3
(PCINT20/TDO)PC4
(PCINT21/TDI)PC5
(PCINT22/TOSC1)PC6
(PCINT23/TOSC2)PC7
(PCINT24/RXD0)PD0
(PCINT25/TXD0)PD1
(PCINT26/RXD1/INT0)PD2
(PCINT27/TXD1/INT1)PD3
(PCINT28/XCK1/OC1B)PD4
(PCINT294/OC1A)PD5
(PCINT30/OC2B/ICP)PD6
(PCINT31/OC2A)PD7
PA0
PA1
PB0
L2
SD_VDD
PB4
PB5
PB6
PB7
PC0
PC1
PC3
PC4
J5
J4
RX0
TX0
RX1
TX1
TIMEPULSE
EXTINT
GEO_STAT
J6
J7
POWER_ANALOG_3V3
U6
AT24CS64–SSHM
A0
A1
A2
SDA
SCL
WP
C30 100nF
R20 10k
R21 10k
SCL PC0
SDA PC1
ABS07–120–32.768KHZ–T
Y2
OSCI
OSCO
VDD
U11
PCF85263A
INTA
CLK
TS
VBAT
C47 100nF
J22
PB6 MISO
PB7 SCK
RST#_P
VTG
MOSI PB5
J8
J9
J10
J11
J12
J13
FOR SD CARD PCB
J1
SM08B–GHS–TB
MP
UAV_5V
J14
SM06B–GHS–TB
Author: UST
Size: A4
Page: 2/3
Date: 2022–03–30
UST

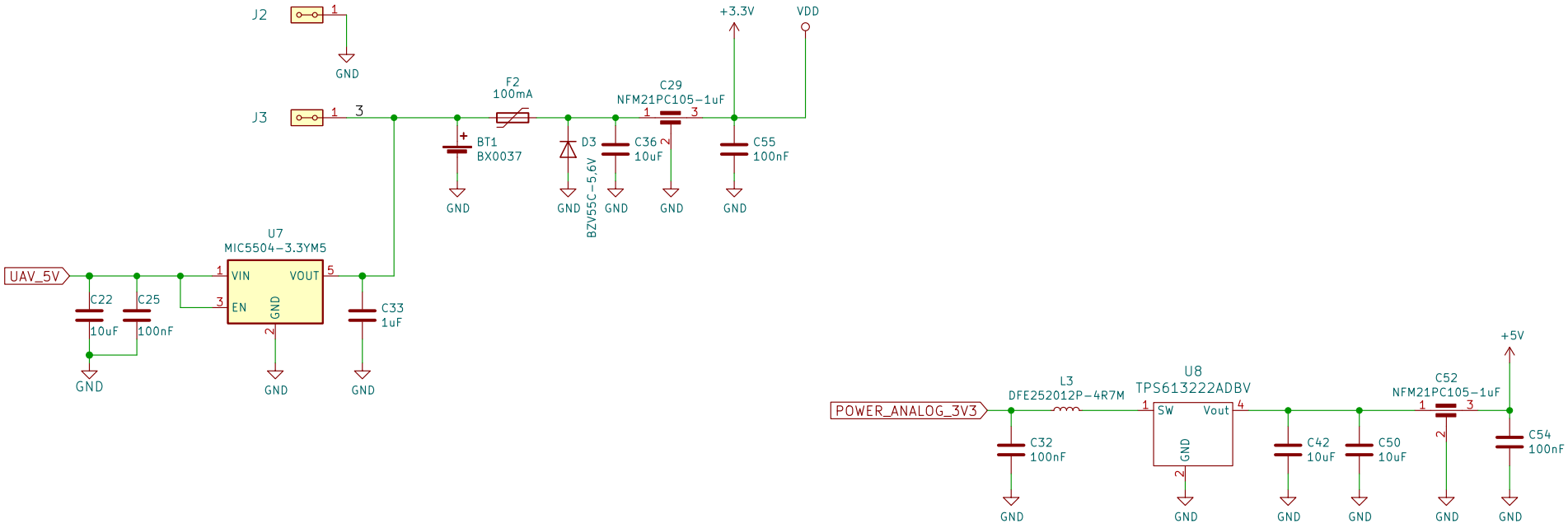

Author: UST

Size: A4 | Page: 3/3 | Date: 2022-03-30