OSCIVOX

Analog Acoustic Guitar Tuner

Data sheet

Device Category: Electronic Audio Accessory

Status: Prototype

Revision Date: December 2025

1. Product Overview

This device is a purely analog acoustic guitar tuning instrument designed specifically for acoustic guitars. The tuner detects the input signal from the guitar and processes it using analog signal conditioning and frequency-to-voltage conversion techniques. LED indicators provide a clear visual indication of tuning status, allowing the user to accurately tune each string.

The device operates entirely without digital processing or software and is powered by a rechargeable battery, making it suitable for portable use during practice and performance.

2. Key Features

- Frequency Range: 82 Hz – 330 Hz for standard acoustic guitar tuning.
- Accuracy: 1.5% – 6% depending on string frequency.
- LED Indicators: Blue = flat, Red = sharp, Both = in tune.
- Power: 9V rechargeable battery, ~8–10 hours runtime.
- Portable: Handheld, lightweight, easy to use.
- Analog Operation: Frequency-to-voltage conversion and comparator logic, no digital processing.
- Selectable Notes: Two-pole, six-position switch for each string.
- Microphone input with analog amplification.
- Six bandpass filters to isolate each string's frequency.
- Adjustable Calibration: Fine-tune reference frequencies as needed.

3. Applications

- Educational demonstrations in laboratories, classrooms, and training workshops.
- Supports learning and practice of guitar tuning techniques.
- Demonstrations of analog signal processing in acoustic instruments.

4. Block Diagram

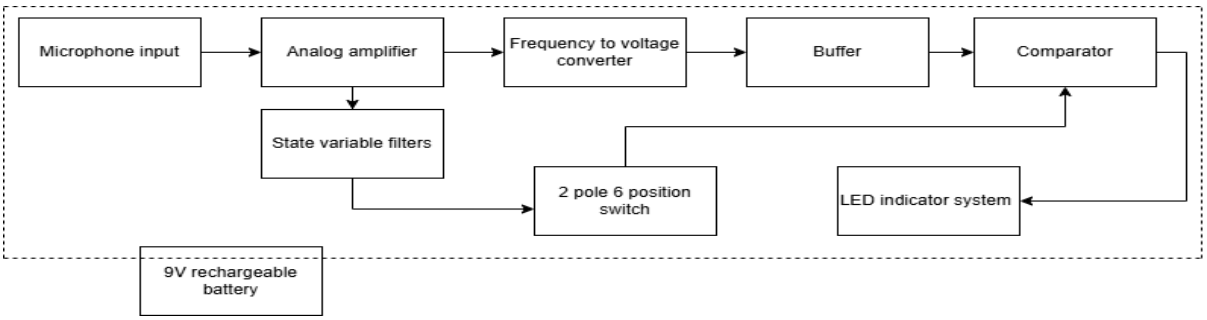

5. Absolute Maximum Ratings

Parameter	Symbol	Rating	Unit
Supply voltage	V_S	±9 to ±12	V
Microphone input signal voltage	V_{IN}	±300	mV
Maximum supply current	I_S	200	mA
LED forward current (per LED)	I_{LED}	25	mA
Operating temperature (absolute)	T_{OP}	−10 to +60	°C
Storage temperature	T_{STG}	−20 to +70	°C

6. Recommended Operating Conditions

Parameter	Symbol	Min	Typ	Max	Unit
Supply voltage	V_S	8.0	9.0	12.0	V
Supply current	I_S	—	50	200	mA
Microphone input signal	V_{IN}	—	100	300	mV
LED operating current (per LED)	I_{LED}	5	15	20	mA
Operating temperature	T_{OP}	0	25	45	°C
Relative humidity (non-condensing)	RH	—	—	85	%

7. Electrical Characteristics

Parameter	Symbol	Min	Typ	Max	Unit
Supply voltage	V_S	8.0	9.0	12.0	V
Supply current	I_S	—	50	200	mA
Power consumption	P	—	450	2400	mW
Microphone input impedance	Z_{IN}	50	100	—	kΩ
Microphone input sensitivity	V_{IN}	—	100	200	mV
Frequency detection range	f	82	—	330	Hz
Freq-to-voltage output	$V_{F\text{-}V}$	0.5	2.5	4.8	V
Comparator threshold window	ΔV	—	±50	—	mV
LED forward voltage (typ)	V_F	—	2.0	—	V

8. Functional Description

The acoustic guitar tuner employs a fully analog signal processing architecture. The acoustic signal from the guitar string is captured using an onboard microphone and amplified through an analog preamplifier to obtain a suitable signal level for further processing.

The amplified signal is routed to a bank of six bandpass filters, each tuned to the fundamental frequency of one of the six standard guitar strings. A two-pole, six-position selector switch is used to select the desired string by simultaneously routing the signal through the corresponding bandpass filter and enabling the appropriate reference path.

The selected filtered signal is applied to a frequency to voltage conversion stage, which generates a DC voltage proportional to the input frequency. This output is passed through a buffer stage to stabilize the voltage and provide low output impedance for accurate comparison.

The buffered voltage is then compared with a predefined reference voltage corresponding to the correct tuning frequency of the selected string. A comparator logic stage evaluates the voltage difference and drives the LED indicators accordingly, the blue LED indicates a frequency lower than the reference, the red LED indicates a frequency higher than the reference, and simultaneous illumination of both LEDs indicates correct tuning.

The device operates entirely using analog circuitry and is powered by a 9 V rechargeable battery, ensuring real-time response without digital processing or software dependency.

9. Pin Configuration and Pin Description

Pin Name	Type	Description
P1	Power Input	+9 V input from rechargeable battery
GND	Power	Ground reference
M1	Analog Input	Microphone signal input
D1	Output	Drives blue LED (frequency lower than reference)
D2	Output	Drives red LED (frequency higher than reference)
NC	—	No connection

10. Interface Description

Interface	Type	Description
Microphone Input (M1)	Analog Input	Captures acoustic signal from the guitar. Connected to an onboard preamplifier. Input impedance: 100 kΩ typical. Maximum input: ±300 mV.
LED Indicators (D1, D2)	Output	Driven by comparator logic. Blue LED indicates frequency below reference; red LED indicates frequency above reference; both LEDs on indicate correct tuning. Maximum current: 20 mA per LED.
Power Input (P1, GND)	Power	9 V rechargeable battery input. Typical supply current: 40 mA. Operating voltage range: 8–12 V.

11. Timing Diagrams

Parameter	Symbol	Min	Typ	Max	Unit	Description
Comparator response time	t_{COMP}	—	1	3	ms	Time from input frequency change to LED response
LED turn-on delay	t_{LED}	—	0.5	2	ms	Delay from comparator output to LED illumination
Frequency-to-voltage conversion settling time	$t_{F\text{-}V}$	—	2	5	ms	Time for output voltage to stabilize after input frequency change

12. Typical Application circuits

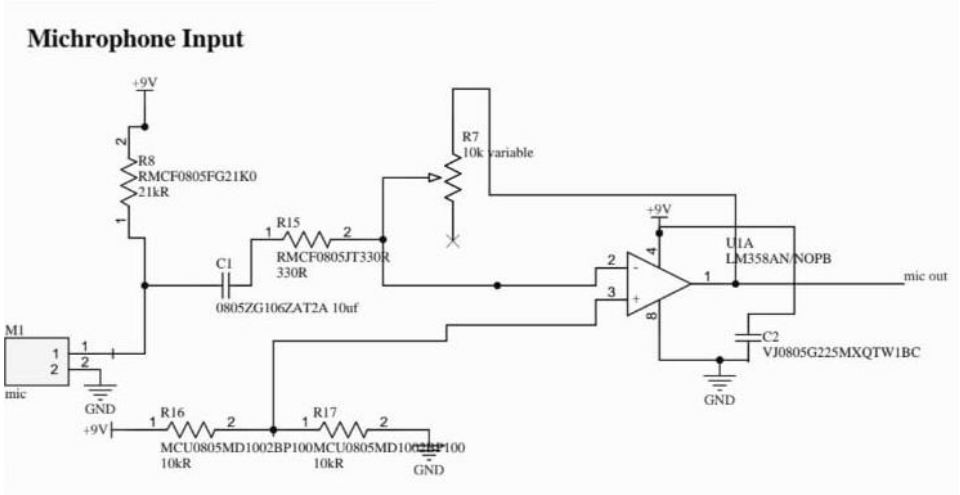

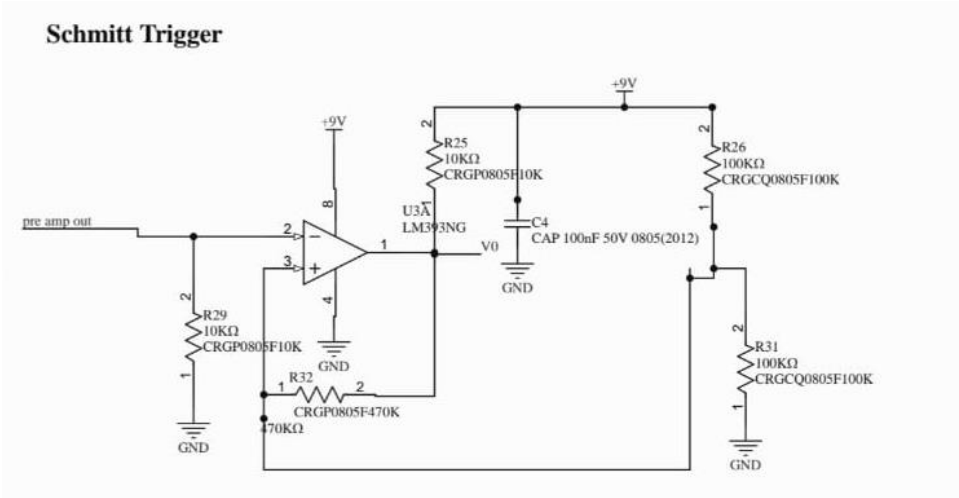
Schmitt Trigger
+9V
R25
10KΩ
CRGP0805F10K
R26
100KΩ
CRGCQ0805F100K
U3A
LM393NG
C4
CAP 100nF 50V 0805(2012)
pre amp out
V0
GND
R29
10KΩ
CRGP0805F10K
R31
100KΩ
CRGCQ0805F100K
R32
CRGP0805F470K
470KΩ

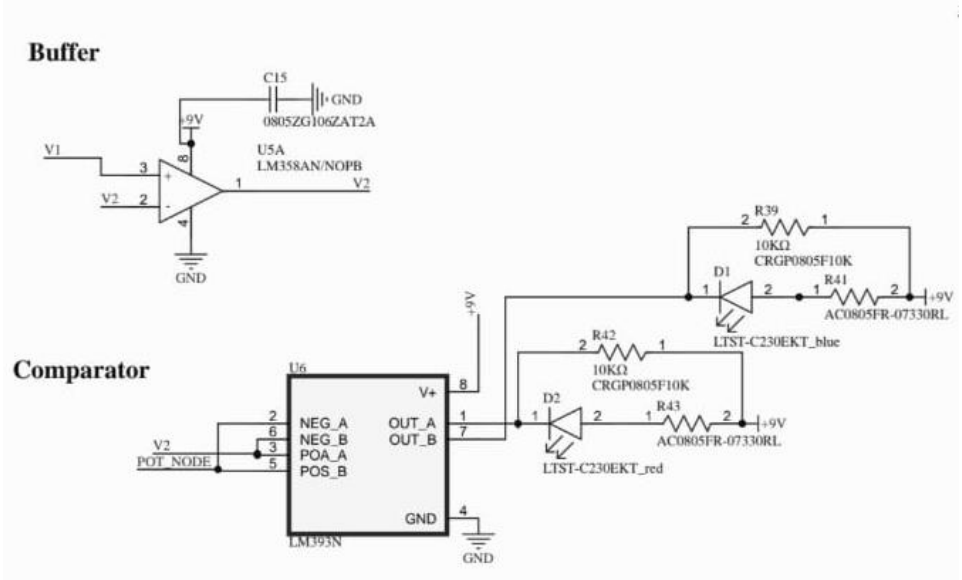
Buffer
C15
0805ZG106ZAT2A
+9V
GND
V1
V2
U5A
LM358AN/NOPB
Comparator
U6
V+
NEG_A
NEG_B
POA_A
POS_B
OUT_A
OUT_B
GND
LM393N
V2
POT_NODE
R39
10KΩ
CRGP0805F10K
D1
R41
AC0805FR-07330RL
LTST-C230EKT_blue
R42
10KΩ
CRGP0805F10K
D2
R43
AC0805FR-07330RL
LTST-C230EKT_red

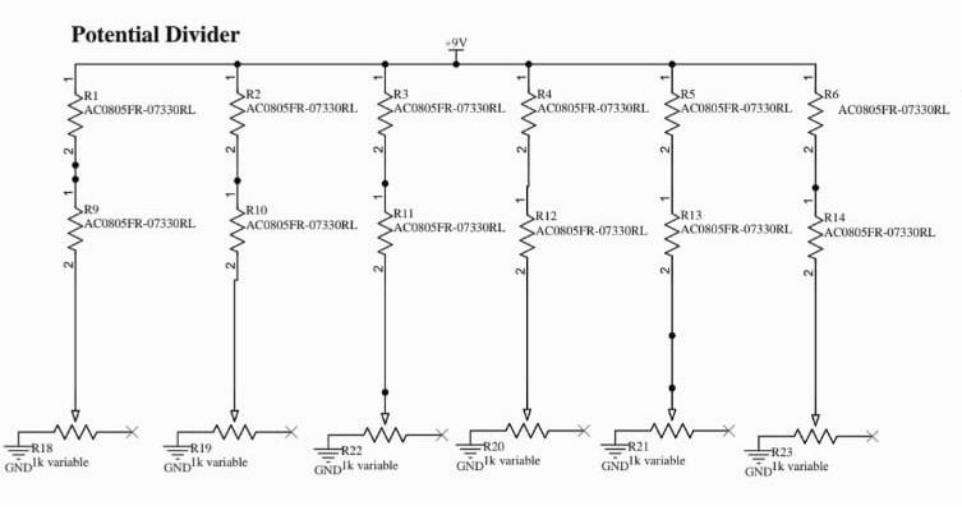
Potential Divider
+9V
R1
R2
R3
R4
R5
R6
R9
R10
R11
R12
R13
R14
AC0805FR-07330RL
R18
R19
R22
R20
R21
R23
1k variable
GND

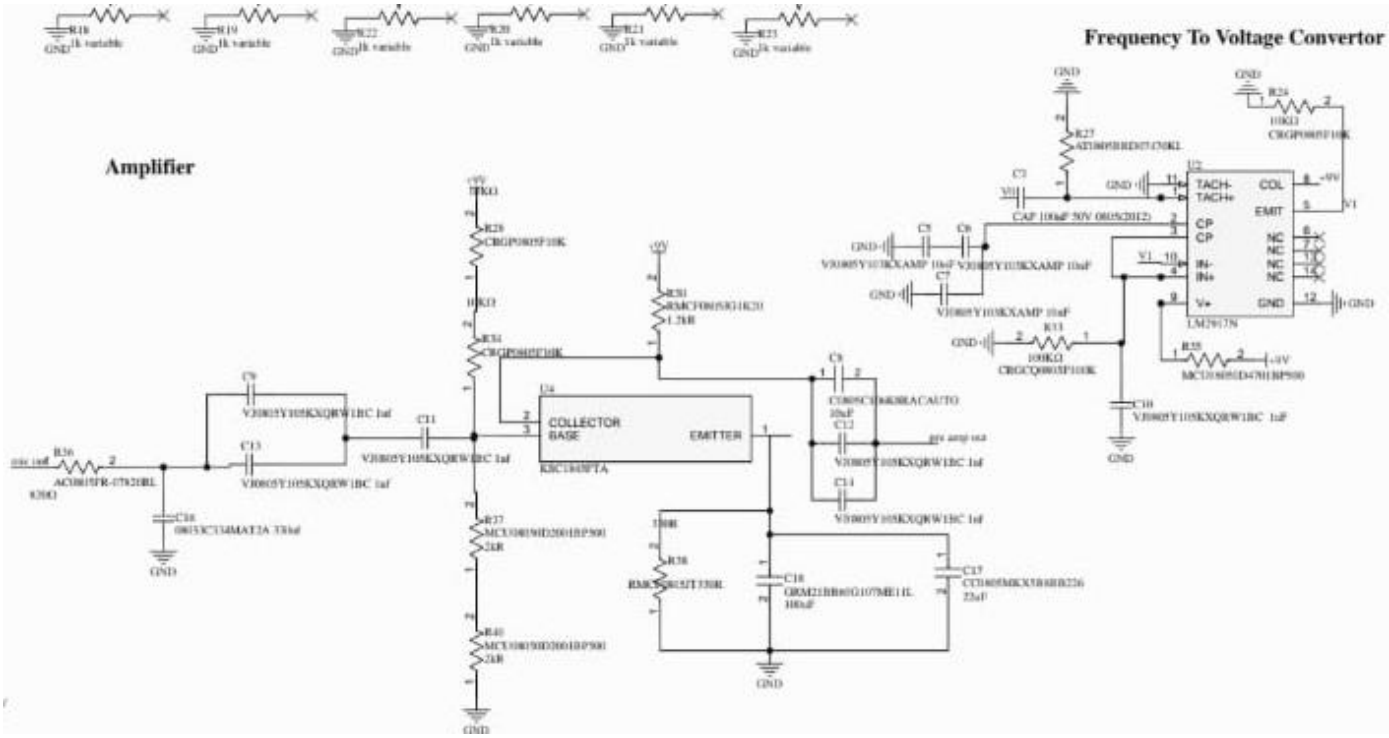

13. Mechanical Characteristics

Parameter	Symbol	Typical Value	Unit	Notes
Overall dimensions	—	195.91 × 135.90 × 56.10	mm	Length × Width × Height (PCB with components)
Weight	—	250	g	Including battery
Enclosure type	—	PLA	—	Lightweight and portable
Mounting	—	Standalone / PCB-mounted	—	No external connectors required beyond MIC and LEDs
Switch type	—	Two-pole, six-position rotary	—	Mounted on PCB for string selection
Connectors	—	2-pin (power), 2-pin (mic)	—	Standard barrel/bias connections

14. Environmental Characteristics

Parameter	Symbol	Min	Typ	Max	Unit	Notes
Operating temperature	T_{OP}	0	25	45	°C	Laboratory use
Storage temperature	T_{STG}	−20	—	70	°C	Battery removed during storage
Relative humidity	RH	—	—	85	%	Non-condensing
Shock	—	—	—	50	g	Short duration, PCB mounted
Vibration	—	—	—	2	g	Low-frequency lab vibrations
Altitude	—	—	—	2000	m	Maximum recommended for indoor use

15. Reliability and Lifetime

Parameter	Symbol	Typ	Unit	Notes
LED lifetime	—	50,000	hours	Typical for standard indicator LEDs
Switch lifetime	—	10,000	cycles	Two-pole, six-position rotary switch
Battery recharge cycles	—	300	cycles	Rechargeable 9 V battery, typical capacity
Expected operational life	—	5	years	Indoor educational use

16. Safety and Regulatory Information

- Power Supply: Only use the supplied 9 V rechargeable battery. Exceeding the recommended voltage may damage the device.
- Electrical Isolation: Device is low-voltage (9 V) and double-insulated, minimizing shock risk.
- LED Indicators: Do not stare directly at LEDs for extended periods.

Battery Handling:

- Do not short-circuit the battery terminals.
- Recharge using the recommended charger only.
- Remove battery if storing device for long periods.

- Environmental Safety: Operate indoors, away from moisture, dust, and extreme temperatures.
- Regulatory Compliance: Device follows general low-voltage educational electronic equipment standards (analog circuitry, no mains connection).

17. Ordering Information

Part Number	Description	Notes
AGT-EDU-01	Analog Acoustic Guitar Tuner	Fully analog, six-string, LED indicators, 9 V rechargeable battery
AGT-EDU-01-KIT	Analog Acoustic Guitar Tuner Kit	Includes tuner, microphone, two LEDs, calibration potentiometer, and battery

18. References

LM2917 Frequency-to-Voltage Converter Datasheet – Texas Instruments.

LM358 Operational Amplifier Datasheet – Texas Instruments.

LM393 Comparator Datasheet – Texas Instruments.

University of Moratuwa, ENTC Department, *Electronics and Circuit Analysis Laboratory Manuals*.

Horowitz, P. & Hill, W., *The Art of Electronics*, 3rd Edition, Cambridge University Press, 2015.

Analog Electronics Application Notes – Frequency-to-voltage conversion and bandpass filter design.

IEC 61010-1 – Safety requirements for low-voltage electronic measuring instruments.

Standard LED datasheets – Red and Blue indicator LEDs for general-purpose analog applications.