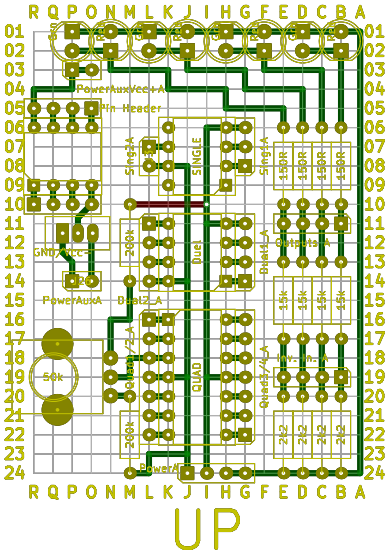

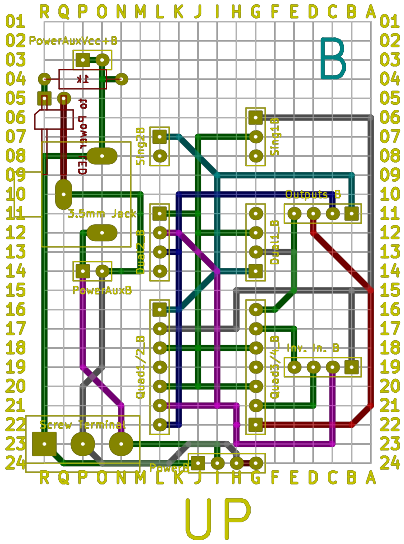

Sheet:
File: Op Amp Tester V1.kicad_pcb

Title:

Size: User	Date: 2018-03-25	Rev:
KiCad E.D.A. kicad 4.0.7-e2-637658ubuntu16.04.1		Id: 1/1