Stony Brook Institute at Anhui University

安徽大学纽约石溪学院

Chapter 4 Numerical characteristics of random variables

Section 1 Mathematical Expectation

- The Mathematical Expectation of Discrete Random Variables
- Mathematical Expectations of Several Common Discrete Random Variables Distributions
- The Mathematical Expectation of Continuous Random Variables
- Mathematical Expectations of Several Common Continuous Random Variables Distributions
- Mathematical Expectation of Function of Random Variable
- Properties of the Mathematical Expectations

Introduction of problems - Monty Hall problem

Example

You are told that there is a hundred dollar bill behind one of three doors and there is nothing behind the other two. Choose one of the doors and let X be the amount of money that you find behind your door. Then X takes on the value 100 with probability 1/3 and 0 with probability 2/3.

Introduction of problems - Monty Hall problem

Now suppose that after choosing a door, but before opening it, you are told one of the other doors that does *not* contain the money. That is, suppose the hundred dollars is behind door number one. If you guessed one, then you are told either that it is not behind door number two or that it is not behind door number three. If you guessed two, you are told that it is not behind door number three, and if you guessed three then you are told that it is not behind door number two.

Introduction of problems - Monty Hall problem

You may now change your guess to the remaining door — the one that you did not choose the first time and that you were not told did not contain the hundred dollars. Let Y be the amount of money that you find if you change your guess. Then Y takes on the value 100 with probability 2/3 and 0 with probability 1/3. Do you see why?

Section 1 Mathematical Expectation

The probability distribution can provide a complete description of a random variable. However, some expected values of a random variable that will provide summary features of the distribution of the random variable.

The expected value of describes where the probability distribution is centered. Let us first give its definition.

The Mathematical Expectation of Discrete Random Variables

1. Definition The mathematical expectation (or simply expectation) or expected value or mean for a discrete random variable X is defined as

$$E(X) = \mu_X = \sum_{x \in R_X} x p_X(x)$$

given that the above series **converges absolutely**, where $p_X(x)$ is p.m.f. of X , R_X is a set of all possible values of X. It means exactly the same thing as

$$E(X) = \sum_k x_k \mathrm{P}(X = x_k)$$

The Mathematical Expectation of Discrete Random Variables

- E(X) is a (real) number. Formally, it is the weighted average of the possible values of X; essentially embodies the true average of X, so it is often called the mean of X; physically represents the center of gravity coordinate of a particle system.
- Calculation of E(X): When the possible value of X is limited, the finite sum is calculated; when the possible value of X is infinite, the sum of the series is calculated.

The Mathematical Expectation of Discrete Random Variables

- If $\sum_{k=1}^{\infty} x_k p_k$ does not converge absolutely, then E(X) does not exist.

- Generalized to two-dimensional:

$$\begin{cases} E(X) = \sum_{i=1}^{\infty}\sum_{j=1}^{\infty} x_i p_{ij} \\ E(Y) = \sum_{j=1}^{\infty}\sum_{i=1}^{\infty} y_j p_{ij} \end{cases}$$

The Mathematical Expectation of Discrete Random Variables

Example 1: Suppose that david has n keys, and only one of them can open the door of his own home. He will try one of these keys to open the door at will, and remove each key after trying it once.

Calculate: The mathematical expectation of the number of attempts to open the door.

Answer: Suppose the number of test openings is X, then:

$$\mathbf{P\,(X=k)} = \frac{1}{n}, \quad k = 1,2,\cdots\cdots,n$$

Thus, by the definition of mathematical expectation:

$$\mathbf{E\,(X)} = \sum_{k=1}^{n} k \cdot \frac{1}{n} = \frac{1}{n} \cdot \frac{(1+n)n}{2} = \frac{n+1}{2}$$

Mathematical Expectations of Several Common Discrete Random Variables Distributions

Example 2： The credit department of a bank conducted a survey on two companies that came to apply for loans, and estimated the profit and the corresponding probabilities of their products in the three conditions of best-selling, marketable and unsalable products in the market as follows:

Enterprise A

Product	Best-selling	marketable	slow-sales
Profit amount X1	50	30	-20
Probability	0.15	0.6	0.25

Product	Best-selling	marketable	slow-sales
Profit amount X2	60	36	-40
Probability	0.1	0.6	0.3

Enterprise B

Unit: ten thousand yuan

Mathematical Expectations of Several Common Discrete Random Variables Distributions

Question： When all other conditions are the same, which enterprise should b ch is more secure?

$$\begin{pmatrix} 50 & 30 & -20 \\ 0.15 & 0.6 & 0.25 \end{pmatrix}, \quad \begin{pmatrix} 60 & 36 & -40 \\ 0.1 & 0.6 & 0.3 \end{pmatrix}$$

Answer： When other conditions are the same, the average value of the profits of the two companies should be examined.

So find their mathematical expectations separately:

$$\boldsymbol{E(X_1) = 50 \times 0.15 + 30 \times 0.6 + (-20) \times 0.25 = 20.5}$$

$$\boldsymbol{E(X_2) = 60 \times 0.1 + 36 \times 0.6 + (-40) \times 0.3 = 15.6}$$

It can be seen that the economic efficiency of Enterprise A is higher than that of Enterprise B, so it is safer for the credit department to approve Enterprise A's loans first.

Mathematical Expectations of Several Common Discrete Random Variables Distributions

(1) (0-1) Distributed

If the random variable X can only take two values, 0 and 1, its distribution law is:

$$P\ (X = k) = p^k (1-p)^{(1-k)} \qquad k = 0,1. \quad 0 < p < 1$$

Then ： $\mathrm{E(X)} = 0 \cdot q + 1 \cdot p = p$

Mathematical Expectations of Several Common Discrete Random Variables Distributions

(2) Binomial Distribution

Let the random variable X obey the binomial distribution with parameter(n, p), $X \sim B\,(n, p)$,

$$P(X = k) = c_n^k p^k q^{n-k}, \quad k = 1,2,\cdots,n$$

$$\mathrm{E(X)} = np$$

Mathematical Expectations of Several Common Discrete Random Variables Distributions

Then: $$\mathrm{E(X)} = \sum_{k=0}^{n} k \cdot c_n^k p^k q^{n-k} = \sum_{k=1}^{n} k \cdot \frac{n!}{k!\,(n-k)!} p^k q^{n-k}$$

$$= \sum_{k=1}^{n} \frac{n!}{(k-1)!\,(n-k)!} p^k q^{n-k}$$

$$= np \sum_{k=1}^{n} \frac{(n-1)!}{(k-1)!\,[(n-1)-(k-1)]!} \; p^{k-1} q^{(n-1)-(k-1)}$$

$$= np \sum_{k=0}^{n-1} \frac{(n-1)!}{k'!\,[(n-1)-k']!} p^{k'} q^{(n-1)-k'}$$

$$= np \sum_{k=0}^{n-1} C_{n-1}^{k'} p^{k'} q^{(n-1)-k'}$$

$$= np[p + (1-p)]^{n-1} = np$$

Mathematical Expectations of Several Common Discrete Random Variables Distributions

(3) Poisson distribution

If all possible values of the random variable X are:0,1,2,……And its distribution law (each probability of its value) is:

$$P(X=k)=\frac{\lambda^{k}e^{-\lambda}}{k!} \quad k=0,1,2,\cdots$$

$X \sim P(\lambda)$

$$\mathrm{E(X)}=\sum_{k=0}^{\infty} k\cdot\frac{\lambda^{k}}{k!}e^{-\lambda}=\lambda e^{-\lambda}\sum_{k=1}^{\infty}\frac{\lambda^{k-1}}{(k-1)!}$$

$$=\lambda e^{-\lambda}\cdot e^{\lambda} \quad =\lambda$$

e^{x} Expanding

$$\mathrm{E(X)}=\lambda$$

Section 1 Mathematical Expectation

- The Mathematical Expectation of Discrete Random Variables
- Mathematical Expectations of Several Common Discrete Random Variables Distributions
- The Mathematical Expectation of Continuous Random Variables
- Mathematical Expectations of Several Common Continuous Random Variables Distributions
- Mathematical Expectation of Function of Random Variable
- Properties of the Mathematical Expectations

The Mathematical Expectation of Continuous Random Variables

Definition 2 If X is a continuous r.v. with pdf $f_X(x)$, then the mathematical expectation or expected value or mean is defined as

$$E(X) = \mu_X = \int_{-\infty}^{\infty} x f_X(x) \mathrm{d}x$$

given that the above integral converges absolutely. Otherwise the expectation does not exist.

The mathematical expectation of continuous random variables is an **absolutely convergent** integral.

The Mathematical Expectation of Continuous Random Variables

- The mathematical expectation of continuous random variables is the same as that of discrete random variables (omitted)
- Generalized to two-dimensional:

$$E(X) = \int_{-\infty}^{+\infty} x \cdot f_X(x)dx = \int_{-\infty}^{+\infty}\int_{-\infty}^{+\infty} x \cdot f(x,y)dxdy$$

$$E(Y) = \int_{-\infty}^{+\infty} y \cdot f_Y(y)dy = \int_{-\infty}^{+\infty}\int_{-\infty}^{+\infty} y \cdot f(x,y)dxdy$$

$f(x,y)$is the joint probability density

The Mathematical Expectation of Continuous Random Variables

Example 3: Assuming that a system L has three connection modes, and its life Z is a random variable, it is now known that the probability densities of the respective lifespans of these three connection modes are:

$$f_X(x)=\begin{cases}\alpha e^{-\alpha x}, & x>0,\\ 0, & x\le 0.\end{cases}\qquad f_Y(y)=\begin{cases}\beta e^{-\beta y}, & y>0,\\ 0, & y\le 0.\end{cases}$$

其中 $\alpha>0,\beta>0$ 且 $\alpha\neq\beta$. 试分别就以上三种联接方式写出 L 的寿命 Z 的密度函数.

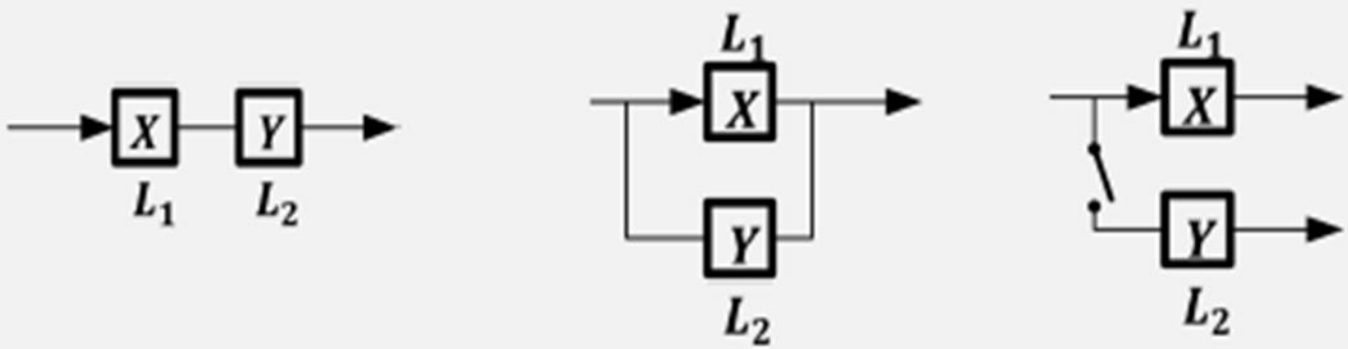

The Mathematical Expectation of Continuous Random Variables

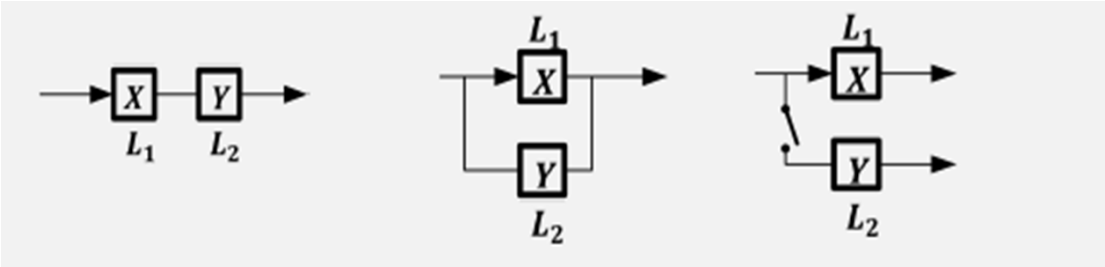

$(\alpha > 0,\ \beta > 0)$

Z_1 (series):

$$f_{\min} = \begin{cases} (\alpha+\beta)e^{-(\alpha+\beta)z} & z > 0 \\ 0 & z \le 0 \end{cases}$$

Z2 (parallel)

$$f_{max} = \begin{cases} \alpha e^{-\alpha z} + \beta e^{-\beta z} - (\alpha+\beta)e^{-(\alpha+\beta)z} & z > 0 \\ 0 & z \le 0 \end{cases}$$

Z3 (spare)

$$f(z) = \begin{cases} \dfrac{\alpha\beta}{\beta-\alpha}[e^{-\alpha z} - e^{-\beta z}] & z > 0 \\ 0 & z \le 0 \end{cases}$$

Find: Which of the connection methods has the longest average life?

The Mathematical Expectation of Continuous Random Variables

Answer: According to the meaning of the question, when z>0, the mathematical expectations are:

$$f_{\min} = \begin{cases} (\alpha+\beta)e^{-(\alpha+\beta)z} & z > 0 \\ 0 & z \le 0 \end{cases}$$

$$E(Z_1) = (\alpha+\beta)\int_0^{+\infty} ze^{-(\alpha+\beta)z}dz = \frac{1}{\alpha+\beta}$$

The Mathematical Expectation of Continuous Random Variables

Answer: According to the meaning of the question, when z>0, the mathematical expectations are:

$$f_{max} = \begin{cases} \alpha e^{-\alpha z} + \beta e^{-\beta z} - (\alpha+\beta)e^{-(\alpha+\beta)z} & z > 0 \\ 0 & z \le 0 \end{cases}$$

$$E(Z_2) = \int_0^{+\infty} z\alpha e^{-\alpha z} dz + \int_0^{+\infty} z\beta e^{-\beta z} dz - \int_0^{+\infty} z(\alpha+\beta)e^{-(\alpha+\beta)z} dz$$

$$= \frac{1}{\alpha} + \frac{1}{\beta} - \frac{1}{\alpha+\beta}$$

The Mathematical Expectation of Continuous Random Variables

Answer: According to the meaning of the question, when z>0, the mathematical expectations are:

$$f(z)=\begin{cases}\dfrac{\alpha\beta}{\beta-\alpha}[e^{-\alpha z}-e^{-\beta z}] & z>0\\ 0 & z\le 0\end{cases}$$

$$E(Z_3)=\int_0^{+\infty} z[\frac{\alpha\beta}{\alpha-\beta}(e^{-\beta z}-e^{-\alpha z})]dz \quad =\frac{1}{\alpha}+\frac{1}{\beta}$$

Obviously: $E(Z_3)>E(Z_2)$, $E(Z_2)-E(Z_1)=\dfrac{\alpha^2+\beta^2}{\alpha\beta(\alpha+\beta)}>0$

Therefore, Z_3 has the longest lifespan in the spare connection mode.

Mathematical Expectations of Several Common Distributions

(1) Uniform Distribution

If the continuous random variable X has a probability density f (x):

$$f(x) = \begin{cases} \dfrac{1}{b-a} & a < x < b \\ 0 & else \end{cases}$$

$$X \sim U\,[a, b]$$

Then: $$E(X) = \int_{-\infty}^{+\infty} x f(x) dx = \int_a^b x \cdot \frac{1}{b-a} dx = \frac{a+b}{2}$$

$$E(X) = \frac{a+b}{2}$$

Mathematical Expectations of Several Common Distributions

(2) Exponential Distribution

If the continuous random variable X has a probability density $f(x)$:

$$f(x) = \begin{cases} \lambda e^{-\lambda x} & x > 0 \\ 0 & else \end{cases} \qquad \lambda > 0$$

Then: $$E(X) = \int_{-\infty}^{+\infty} x f(x) dx = \int_{0}^{+\infty} x \cdot \lambda e^{-\lambda x} dx$$

$$= \frac{1}{\lambda} \int_{0}^{+\infty} \lambda x e^{-\lambda x} d\lambda x = \frac{1}{\lambda} \int_{0}^{+\infty} x \cdot e^{-x} d x = \frac{1}{\lambda}$$

$$E(X) = \frac{1}{\lambda}$$

Mathematical Expectations of Several Common Distributions

(3) Normal Distribution

If the probability density of random variable X is:

$$f(x) = \frac{1}{\sigma\sqrt{2\pi}} e^{-\frac{(x-\mu)^2}{2\sigma^2}}, \quad -\infty < x < \infty$$

$$X \sim N(\mu, \sigma^2)$$

Then: $E(X) = \int_{-\infty}^{+\infty} x f(x) dx = \int_{-\infty}^{+\infty} x \frac{1}{\sqrt{2\pi}\sigma} e^{-\frac{(x-\mu)^2}{2\sigma^2}} dx$

$$make: y = \frac{x-\mu}{\sigma} \Rightarrow$$

$$= \frac{1}{\sqrt{2\pi}} \int_{-\infty}^{+\infty} (\sigma y + \mu) e^{-\frac{y^2}{2}} dy$$

$$= \frac{\sigma}{\sqrt{2\pi}} \int_{-\infty}^{+\infty} y e^{-\frac{y^2}{2}} dy + \frac{\mu}{\sqrt{2\pi}} \int_{-\infty}^{+\infty} e^{-\frac{y^2}{2}} dy$$

The parameter *u* of the density function in the normal distribution is exactly the mathematical expectation of the random variable X.

$$E(X) = \mu$$

Mathematical Expectation of Function of Random Variable

1. New problem:

Assuming that the distribution of a random variable X is known, and Y=g(X), how to calculate the mathematical expectation of Y ?

That is, how to calculate the mathematical expectation of a function of a random variable?

Section 1 Mathematical Expectation

- The Mathematical Expectation of Discrete Random Variables
- Mathematical Expectations of Several Common Discrete Random Variables Distributions
- The Mathematical Expectation of Continuous Random Variables
- Mathematical Expectations of Several Common Continuous Random Variables Distributions
- Mathematical Expectation of Function of Random Variable
- Properties of the Mathematical Expectations

Mathematical Expectation of Function of Random Variable

Theorem Let g be a continuous real valued function of r.v. X , then $Y = g(X)$ is an r.v. with

$$E(Y) = E[g(X)] = \sum_{x \in R_X} g(x) p_X(x)$$

if X is a discrete r.v. with p.m.f. $\mathrm{P}(X = x) = p_X(x)$. Or

$$E(Y) = E[g(X)] = \int_{-\infty}^{\infty} g(x) f_X(x) \mathrm{d}x$$

if X is a continuous r.v. with pdf $f_X(x)$.

Mathematical Expectation of Function of Random Variable

- Any function $Y = g(X)$ of a single r.v. X is an r.v. too.
- Not necessary to obtain the probability distribution of $Y = g(X)$ to compute its expectation.
- $E(Y) = E[g(X)]$ is computed in the same way that $E(X)$ is, except that $g(x)$ is substituted in place of x.
- Similar result holds for a function $g(X, Y)$ of two jointly distributed random variables (X, Y) .

Mathematical Expectation of Function of Random Variable

This theorem can be extended to the case of two or more random variables:

(1) If (X, Y) is a discrete random variable, its joint distribution law is:

$$P(X = x_i, Y = y_j) = P_{ij}, \qquad i, j = 1,2,\cdots$$

Then, $$E(Z) = E[g(X,Y)] = \sum_{j=1}^{\infty}\sum_{i=1}^{\infty} g(x_i, y_j)p_{ij}$$

it is assumed that the series on the right side of the above formula absolutely converges.

Mathematical Expectation of Function of Random Variable

This theorem can be extended to the case of two or more random variables:

(2) If (X, Y) is a continuous random variable and its joint probability density is f(x, y), then:

$$E(Z) = E[g(X,Y)] = \int_{-\infty}^{\infty}\int_{-\infty}^{\infty} g(x,y)f(x,y)dxdy$$

it is assumed that the integral on the right side converges absolutely.

Mathematical Expectation of Function of Random Variable

Example 4. Suppose the joint probability density of two-dimensional continuous random variables (X, Y) is:

$$f(x,y) = \begin{cases} 3x & 0 < y < x < 1 \\ 0 & else \end{cases}$$

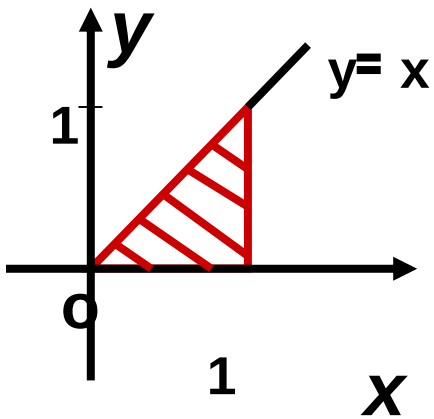

Question: The mathematical expectation of Z=XY.

Answer:

$$E(Z) = E(XY) = \int_{-\infty}^{\infty}\int_{-\infty}^{\infty} xyf(x,y)dxdy$$

$$= \int_0^1 dx \int_0^x xy \cdot 3xdy = \frac{3}{10}$$

Section 1 Mathematical Expectation

- The Mathematical Expectation of Discrete Random Variables
- Mathematical Expectations of Several Common Discrete Random Variables Distributions
- The Mathematical Expectation of Continuous Random Variables
- Mathematical Expectations of Several Common Continuous Random Variables Distributions
- Mathematical Expectation of Function of Random Variable
- Properties of the Mathematical Expectations

Properties of the Mathematical Expectations

Property 1 $E(C) = C$ where C is a constant.
Property 2 $E(CX) = CE(X)$ where X is an r.v. and C is a constant.
Property 3 $E(X+Y) = E(X) + E(Y)$ where X and Y are random variables.
In general, if $\alpha_1, \alpha_2, \cdots, \alpha_n$ are real numbers, then

$$E\left(\alpha_1 X_1 + \alpha_2 X_2 + \cdots + \alpha_n X_n\right)$$

$$= \alpha_1 E\left(X_1\right) + \alpha_2 E\left(X_2\right) + \cdots + \alpha_n E\left(X_n\right)$$

Property 4 If r.v.'s X and Y are independent then

$$E(XY) = E(X)E(Y)$$

Properties of the Mathematical Expectations

Find the Mathematical of Binomial Distribution with Properties.

Suppose that random variable X obey the binomial distribution with parameter(n, p), $X \sim B\ (n, p)$.

Then, X=$\sum X_i$, where $X_i \sim b\ (p)$, and X_i are independent to each other.

$$E(X) = E(\sum X_i) = \sum E(X_i) = np$$

Properties of the Mathematical Expectations

Example 7. $Suppose\ pdf.X\quad f_X(x)=\begin{cases}\frac{1}{2}e^{x} & x\le 0\\ \frac{1}{2}e^{-x} & x>0\end{cases}$

Calculate the mathematical expectation of $Y=|X|+b$.

Answer:

$$E(Y)=\int_{-\infty}^{+\infty}(|x|+b)\cdot f(x)dx$$

$$=\int_{-\infty}^{+\infty}|x|\,f(x)dx+\int_{-\infty}^{+\infty}bf(x)dx$$

$$=\int_{-\infty}^{0}(-x)\frac{1}{2}e^{x}dx+\int_{0}^{+\infty}x\frac{1}{2}e^{-x}dx$$

$$+b[\int_{-\infty}^{0}\frac{1}{2}e^{x}dx+\int_{0}^{+\infty}\frac{1}{2}e^{-x}dx]\quad=1+b$$