The Foundations: Logic and Proofs

Chapter 1

Xiang Yan
yxiang@ahu.edu.cn

Chapter Contents

1.1 Propositional Logic

1.2 Applications of Propositional Logic

1.3 Propositional Equivalences

1.4 Predicates and Quantifiers

1.5 Nested Quantifiers

1.6 Rules of Inference

1.7 Introduction to Proofs

1.8 Proof Methods and Strategy

Chapter Summary

Propositional Logic

- The Language of Propositions
- Applications
- Logical Equivalences

Predicate Logic

- The Language of Quantifiers
- Logical Equivalences
- Nested Quantifiers

Proofs

- Rules of Inference
- Proof Methods
- Proof Strategy

Propositional Logic Summary

The Language of Propositions

- Connectives
- Truth Values
- Truth Tables

Applications

- Translating English Sentences
- System Specifications
- Logic Puzzles
- Logic Circuits

Logical Equivalences

- Important Equivalences
- Showing Equivalence
- Satisfiability

Propositional Logic

Section 1.1

Section Summary 1

Propositions

Connectives

- Negation
- Conjunction
- Disjunction
- Implication; contrapositive, inverse, converse
- Biconditional

Truth Tables

1.1.2 Propositions

A proposition is a declarative sentence (that is, a sentence that declares a fact) that is either true or false, but not both.

Which ones of the following sentences are propositions?

a) Beijing is the capital of China.
b) The Moon is made of green cheese.
c) What time is it?
d) Sit down!
e) $1 + 0 = 1$
f) $0 + 0 = 2$
g) $x + 1 = 2$
h) $x + y = z$

Propositional Logic

Constructing Propositions

We use letters *p, q, r, . . .* to denote **propositional variables**.

- The truth value of a proposition is **true**, denoted by **T**, if it is a **true proposition**.
- The truth value of a proposition is **false**, denoted by **F**, if it is a **false proposition**.
- Propositions that cannot be expressed in terms of simpler propositions are called **atomic propositions**.

The area of logic that deals with propositions is called the **propositional calculus** or **propositional logic**. It was first developed by Aristotle more than 2300 years ago.

Propositional Logic

Constructing Compound Propositions

- Constructed from logical connectives and other propositions
  - Negation $\neg$
  - Conjunction $\wedge$
  - Disjunction $\vee$
  - Implication $\rightarrow$
  - Biconditional $\leftrightarrow$

Compound Propositions: Negation

The *negation* of a proposition p is denoted by $\neg p$ *(read not p)* and has this truth table:

p	$\neg p$
T	F
F	T

If p denotes "The earth is round.", then $\neg p$ denotes

"The earth is not round,"

or "It is not the case that the earth is round."

$\neg p$, $\sim p$, $-p$, p', Np, and !p

Compound Propositions: Negation

Michael’s PC runs Linux

The negation is "It is not the case that Michael’s PC runs Linux.”

This negation can be more simply expressed as "Michael’s PC does not run Linux.”

Vandana’s smartphone has at least 32 GB of memory

It is not the case that Vandana’s smartphone has at least 32 GB of memory.

Vandana’s smartphone does not have at least 32 GB of memory.

Vandana’s smartphone has less than 32 GB of memory.

Conjunction

The *conjunction* of propositions p and q is denoted by $p \wedge q$ and has this truth table:

p	q	$P \wedge q$
T	T	T
T	F	F
F	T	F
F	F	F

If p denotes "I am at home." and q denotes "It is raining."

then $p \wedge q$ denotes

"I am at home and it is raining."

Disjunction

The *disjunction* of propositions p and q is denoted by $p \vee q$ and has this truth table:

p	q	$P \vee q$
T	T	T
T	F	T
F	T	T
F	F	F

If p denotes "I am at home." and q denotes "It is raining."

then $p \vee q$ denotes

"I am at home or it is raining."

The Connective Or in English

In English "or" has two distinct meanings.

"Inclusive Or"

- Students who have majored CS202 or Math120 may major this class.
- This is the meaning of disjunction. For $p \vee q$ to be true, either one or both of p and q must be true.

"Exclusive Or"

- A student can have soup or a salad with dinner.
- This is the meaning of Exclusive Or (Xor).
- In $p \oplus q$, one of p and q must be true, but not both.

The Connective Or in English

The truth table for $\oplus$ is:

p	q	$P \oplus q$
T	T	F
T	F	T
F	T	T
F	F	F

1.1.3 Conditional Statements

If p and q are propositions, then $p \rightarrow q$ is a *conditional statement* or *implication* which is read as "if p, then q" and has this truth table:

p	q	$P \rightarrow q$
T	T	T
T	F	F
F	T	T
F	F	T

If p denotes "I am at home." and q denotes "It is raining."

then $p \rightarrow q$ denotes

"If I am at home then it is raining."

Implication

If p then q $\quad p \rightarrow q$

p is called the hypothesis; q is called the conclusion

The department says: "If your GPA is 3.0, then you don't need to pay tuition fee."

When is the above sentence false?

- It is false when your GPA is 3.0 but you still have to pay tuition fee.
- But it is not false if your GPA is below 3.0.

Understanding Implication 1

In $p \rightarrow q$ there does not need to be any connection between the antecedent or the consequent. The "meaning" of $p \rightarrow q$ depends only on the truth values of p and q.

These implications are perfectly fine, but would not be used in ordinary English.

- "If the moon is made of green cheese, then I have more money than Jack Ma. "
- "If 1 + 1 = 3, then your grandma wears combat boots."

Understanding Implication 2

One way to view the logical conditional is to think of an obligation or contract.

- "If I am elected, then I will lower taxes."

  If the politician is elected and does not lower taxes, then the voters can say that he or she has broken the campaign promises.

- "If you get 100% on the final, then you will get an A."

  Something similar holds for the professor.

This corresponds to the case where p is true and q is false.

Different Ways of Expressing $p \rightarrow q$

if p, **then** q

if p, q

p **implies** q

p **only if** q

q **when** p

q **unless** $\neg p$

q **if** p

q **whenever** p

q **follows from** p

p **is sufficient for** q

q **is necessary for** p

a necessary condition for p **is** q

a sufficient condition for q **is** p

Converse, Inverse , and Contrapositive

From $p \rightarrow q$ we can form new conditional statements .

- $q \rightarrow p$ is the **converse** of $p \rightarrow q$
- $\neg p \rightarrow \neg q$ is the **inverse** of $p \rightarrow q$
- $\neg q \rightarrow \neg p$ is the **contrapositive** of $p \rightarrow q$

Example: Find the converse, inverse, and contrapositive of "It raining is a sufficient condition for my not going to town."

converse: If I do not go to town, then it is raining.

inverse: If it is not raining, then I will go to town.

contrapositive: If I go to town, then it is not raining.

Biconditional

If p and q are propositions, then we can form the *biconditional* proposition $p \leftrightarrow q$, read as "p if and only if q ." The biconditional $p \leftrightarrow q$ denotes the proposition with this truth table:

p	q	$P \leftrightarrow q$
T	T	T
T	F	F
F	T	F
F	F	T

If p denotes "I am at home." and q denotes "It is raining." then

$p \leftrightarrow q$ denotes

"I am at home if and only if it is raining."

Expressing the Biconditional

Some alternative ways "*p* if and only if *q*" is expressed in English:

- *p* **is necessary and sufficient for** *q*
- **if** *p* **then** *q*, **and conversely**
- *p* **iff** *q*

1.1.4 Truth Tables For Compound Propositions

Construction of a truth table:

Rows

- Need a row for every possible combination of values for the atomic propositions.

Columns

- Need a column for the compound proposition (usually at far right)
- Need a column for the truth value of each expression that occurs in the compound proposition as it is built up.
  - This includes the atomic propositions

Example Truth Table

Construct a truth table for $p \vee q \rightarrow \neg r$

p	q	r	$\neg r$	$p \vee q$	$p \vee q \rightarrow \neg r$
T	T	T	F	T	F
T	T	F	T	T	T
T	F	T	F	T	F
T	F	F	T	T	T
F	T	T	F	T	F
F	T	F	T	T	T
F	F	T	F	F	T
F	F	F	T	F	T

Equivalent Propositions

Two propositions are *equivalent* if they always have the same truth value.

Example: Show using a truth table that the conditional is equivalent to the contrapositive.

p	q	$\neg p$	$\neg q$	$p \rightarrow q$	$\neg q \rightarrow \neg p$
T	T	F	F	T	T
T	F	F	T	F	F
F	T	T	F	T	T
F	F	T	T	T	T

Non-Equivalence Propositions

Example: Show using truth tables that neither the inverse nor converse of an implication are not equivalent to the implication.

Solution:

p	q	$\neg p$	$\neg q$	$p \rightarrow q$	$\neg p \rightarrow \neg q$	$q \rightarrow p$
T	T	F	F	T	T	T
T	F	F	T	F	T	T
F	T	T	F	T	F	F
F	F	T	T	T	T	T

Problem

How many rows are there in a truth table with *n* propositional variables?

Solution: 2^n We will see how to do this in Chapter 6.

Note that this means that with n propositional variables, we can construct 2^n distinct (that is, not equivalent) propositions.

1.1.5 Precedence of Logical Operators

Operator	Precedence
$\neg$	1
$\wedge$	2
$\vee$	3
$\rightarrow$	4
$\leftrightarrow$	5

$p \vee q \rightarrow \neg r$ is equivalent to $(p \vee q) \rightarrow \neg r$

If the intended meaning is $p \vee (q \rightarrow \neg r)$

then parentheses must be used.

1.1.6 Logic and Bit Operations

- Computers represent information using bits.
- A bit is a symbol with two possible values, namely, 0 (zero) and 1 (one).
- A bit can be used to represent a truth value, 1 represents T (true), 0 represents F (false).
- A variable is called a Boolean variable if its value is either true or false.

Logic and Bit Operations

- Computer bit operations correspond to the logical connectives.
- By replacing true by a one and false by a zero in the truth tables for the operators $\wedge$, $\vee$, and $\oplus$, the columns in Table 9 for the corresponding bit operations are obtained.

TABLE 9 Table for the Bit Operators *OR*, *AND*, and *XOR*.

x	y	$x \vee y$	$x \wedge y$	$x \oplus y$
0	0	0	0	0
0	1	1	0	1
1	0	1	0	1
1	1	1	1	0

- We will also use the notation OR, AND, and XOR for the operators $\vee$, $\wedge$, and $\oplus$, as is done in various programming languages.

Logic and Bit Operations

A bit string is a sequence of zero or more bits.

The length of this string is the number of bits in the string.

We can extend bit operations to bit strings, including the bitwise OR, bitwise AND, and bitwise XOR.

	01 1011 0110		01 1011 0110		01 1011 0110
OR	11 0001 1101	AND	11 0001 1101	XOR	11 0001 1101
	11 1011 1111		01 0001 0100		10 1010 1011

Homework after class

1.1 Propositional Logic

Exercises 2,16, and 34(a, d)

Applications of Propositional Logic

Section 1.2

Section Summary

Translating English to Propositional Logic

System Specifications

Boolean Searches

Logic Puzzles

Logic Circuits

1.2.2 Translating English Sentences

Statements in mathematics and the sciences and in natural language often are imprecise or ambiguous.

Steps to convert an English sentence to a statement in propositional logic

- Identify atomic propositions and represent using propositional variables.
- Determine appropriate logical connectives

Translating English Sentences

Example: " If I go to Harry's house or to the country, I will not go shopping."

One Solution:

- *p*: I go to Harry's house.
- *q*: I go to the country.
- *r*: I will go shopping.

If *p* or *q* then not *r*. $(p \vee q) \rightarrow \neg r$

Translating English Sentences

Example : "You can access the Internet from campus only if you are a computer science major or you are not a freshman."

One Solution:

- *p*: You can access the internet from campus.
- *q*: You are a computer science major.
- *r*: You are a freshman.

$$p \rightarrow (q \vee \neg r)$$

1.2.3 System Specifications

System and software engineers take requirements in natural language and produce precise and unambiguous specifications that can be used as the basis for system development.

Example: "The automated reply cannot be sent when the file system is full"

Solution: One possible solution: Let *p* denote "The automated reply can be sent" and *q* denote "The file system is full."

$$q \rightarrow \neg p$$

Consistent System Specifications

Definition: A list of propositions is *consistent* if it is possible to assign truth values to the proposition variables so that each proposition is true.

Consistent System Specifications

Exercise: Are these specifications consistent?

- "The diagnostic message is stored in the buffer or it is retransmitted." $p \vee q$
- "The diagnostic message is not stored in the buffer." $\neg p$
- "If the diagnostic message is stored in the buffer, then it is retransmitted." $p \rightarrow q$

Solution:

Let p denote "The diagnostic message is stored in the buffer."

Let q denote "The diagnostic message is retransmitted".

When p is false and q is true all three statements are true. So the specification is consistent.

Consistent System Specifications

Exercise: Are these specifications consistent?

- "The diagnostic message is stored in the buffer or it is retransmitted." $p \vee q$
- "The diagnostic message is not stored in the buffer." $\neg p$
- "If the diagnostic message is stored in the buffer, then it is retransmitted." $p \rightarrow q$
- "The diagnostic message is not retransmitted." $\neg q$

There is no satisfying assignment.

So the specification is not consistent.

1.2.4 Boolean Searches

Logical connectives are used extensively in searches of large collections of information, such as indexes of Web pages.

Because these searches employ techniques from propositional logic, they are called Boolean searches.

In Boolean searches, the connective AND is used to match records that contain both of two search terms, the connective OR is used to match one or both of two search terms, and the connective NOT (sometimes written as AND NOT) is used to exclude a particular search term.

Note: that Google, and many Extra other search engines, do not require the use of “AND” because such search engines use all search terms by default.

Boolean Searches

Google

anhui and university

登录

全部 地图 新闻 图片 视频 更多 工具

找到约 16,200,000 条结果（用时 0.68 秒）

Google 学术：anhui and university

Clinical profiles of vitiligo in China: an analysis of 3742 … - Liu - 被引用次数：154

… TLR4-mediated inflammatory genes through MyD88- … - Xia - 被引用次数：150

… —A Case Study of Anhui Sanlian University - Yu - 被引用次数：5

Anhui University, located at Hefei—the beautiful capital of Anhui Province，is one of the developing higher institutions supported by the government under the State “211 Project”, one of the higher institutions co-constructed by Ministry of Education of China and Anhui Provincial Government and the only key ...

https://www.topuniversities.com › universities › anhui-uni...

Anhui University : Rankings, Fees & Courses Details | Top ...

关于精选摘要 • 反馈

https://en.wikipedia.org › wiki › Anhui_Unive... 翻译此页

Anhui University - Wikipedia

Founded in 1928 in Anqing, named 'National Anhui University' in 1946 and moved to Hefei in 1958, Anhui University is now supported by the government under ...

Campus： 磬苑校区, 龙河校区 (2,143,116 sq… **President：** Kuang Guangli (匡光力)

Location： Hefei, Anhui, China **Motto：** 至诚至坚，博学笃行 honest, resol…

Campus · Department structure

安徽大学 (Anhui University)

网站 路线 保存

中国合肥市的大学

安徽大学位于中国安徽省会合肥市，是教育部与安徽省人民政府共建的一所大学。安徽大学是首批国家211工程重点建设大学，入选国家卓越法律人才教育培养计划，国家卓越工程师教育培养计划，是“国家华文教育基地”和“中国政府奖学金来华留学生接收院校”。现任校长为匡光力。 维基百科

地址： 中国安徽省合肥市蜀山区

研究生： 5,352

学生人数： 26,690

省份： 安徽省

本科生人数： 21,338

创立于： 1928 年

知名校友 还有45+项

Boolean Searches

Google

anhui university

登录

全部 图片 地图 新闻 视频 更多 工具

找到约 18,000,000 条结果 （用时 0.53 秒）

https://www.ahu.edu.cn

安徽大学

安徽大学（Anhui University），简称安大，坐落于安徽省会合肥，学校是国家“211工程”重点建设高校，是国家“双一流”世界一流学科建设高校，入选“卓越法律人才教育培养 ...

智慧安大 · 教学与科研单位 · 机构设置 · 本科招生

https://en.ahu.edu.cn 翻译此页

安徽大学英文网

2015 All rights reserved. Address：Qingyuan Campus: 111 Jiulong Road, Hefei, Anhui, China (230601)Longhe Campus: 3 Feixi Road, Hefei, Anhui, China (230039)

About AHU · Administration · Logo · Leadership

https://en.wikipedia.org › wiki › Anhui_Unive... 翻译此页

Anhui University - Wikipedia

Anhui University (simplified Chinese: 安徽大学; traditional Chinese: 安徽大學; pinyin: ānhuī dàxué), colloquially known in Chinese as Anda (安大, āndà), ...

Campus： 磬苑校区, 龙河校区 (2,143,116 sq…
President： Kuang Guangli (匡光力)
Location： Hefei, Anhui, China
Motto： 至诚至坚，博学笃行 honest, resol…

Campus · Department structure

http://en.ahut.edu.cn 翻译此页

Anhui University of Technology

安徽工业大学研究生院官方网站,研究生招生,研究生教育,研究生服务.

anhui university的图片搜索结果

安徽大学 (Anhui University)

网站 路线 保存

中国合肥市的大学

安徽大学位于中国安徽省会合肥市，是教育部与安徽省人民政府共建的一所大学。安徽大学是首批国家211工程重点建设大学，入选国家卓越法律人才教育培养计划，国家卓越工程师教育培养计划，是“国家华文教育基地”和“中国政府奖学金来华留学生接收院校”。现任校长为匡光力。 维基百科

地址： 中国安徽省合肥市蜀山区

研究生： 5,352

学生人数： 26,690

省份： 安徽省

本科生人数： 21,338

创立于： 1928 年

知名校友 还有45+项

Boolean Searches

Google

anhui -university

登录

全部 图片 地图 新闻 视频 更多 工具

找到约 260,000,000 条结果 （用时 0.49 秒）

https://www.britannica.com › place › Anhui 翻译此页

Anhui | province, China | Britannica

Anhui, sheng (province), eastern China. It is one of the country's smallest provinces, stretching for some 350 miles (570 km) from north to south.

其他用户还问了以下问题

Is Anhui poor?

Is Anhui near shanghai?

Is Anhui rural?

反馈

https://wikitravel.org › Anhui 翻译此页

Anhui - Wikitravel

Anhui Province located in the east of China, less than 3 hours from Shanghai by high-speed train. With Yangtze River and Huaihe River cross through from ...

Currency: Chinese Renminbi (¥) (CNY) **Population:** 59,900,000(2012 est)
Language: Official: Mandarin

https://economictimes.indiatimes.com › topic 翻译此页

Anhui: Latest News & Videos, Photos about Anhui | The ...

Anhui becomes latest Chinese province to root out cryptocurrency mining. 14 Jul, 2021, 03.18 PM IST. Anhui will shut down all cryptomining projects in a ...

安徽省 (Anhui)

安徽省，简称"皖"，为中华人民共和国一级行政区，省会为合肥市。安徽省大致位于东经114°54′至119°37′与北纬29°41′至34°38′之间，全省东西宽约450千米，南北长约570千米，总面积14.01万平方千米，约占全国总面积的1.45%，居华东第3位，全国第22位。
维基百科

面积： 140,200 平方公里

首府： 合肥市

人口： 6200 万 (2017 年)

目的地： 黄山市， 合肥市， 宏村， 西递村， 芜湖市， 安庆市， 阜阳市， 屯溪区， 更多

地图注点： 黄山， 齐云山， 黄山风景区， 牯牛降自然保护区， 更多

高校

还有20+项

1.2.5 Logic Puzzles

Raymond Smullyan (Born 1919)

An island has two kinds of inhabitants, *knights*, who always tell the truth, and *knaves*, who always lie. You go to the island and meet A and B.

- A says "B is a knight."
- B says "The two of us are of opposite types."

Example: What are the types of A and B?

1.2.5 Logic Puzzles

Raymond Smullyan (Born 1919)

Solution: Let p and q be the statements that A is a knight and B is a knight, respectively. So, then $\neg p$ represents the proposition that A is a knave and $\neg q$ that B is a knave.

- If A is a knight, then p is true. Since knights tell the truth, q must also be true. Then $(p \wedge \neg q) \vee (\neg p \wedge q)$ would have to be true, but it is not. So, A is not a knight and therefore $\neg p$ must be true.
- If A is a knave, then B must not be a knight since knaves always lie. So, then both $\neg p$ and $\neg q$ hold since both are knaves.

1.2.6 Logic Circuits (Studied in depth in Chapter 12)

Electronic circuits; each input/output signal can be viewed as a 0 (False) or 1 (True).

NOT gate

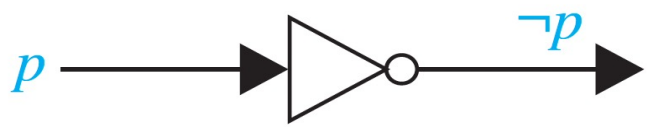

OR gate

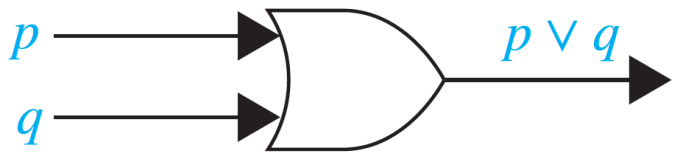

AND gate

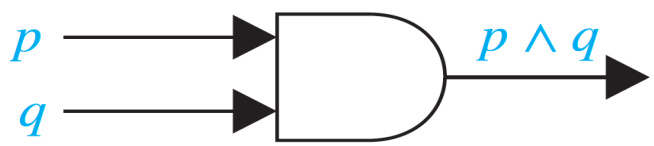

Logic Circuits (Studied in depth in Chapter 12)

The circuit for (p ∧ ¬ q) ∨ ¬ r.

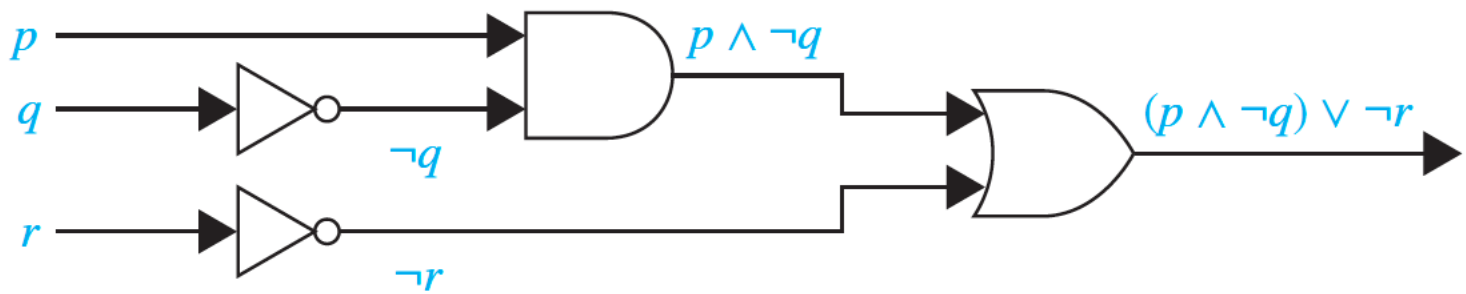

The circuit for (p∨¬r) ∧ (¬ p ∨ (q∨¬r)).

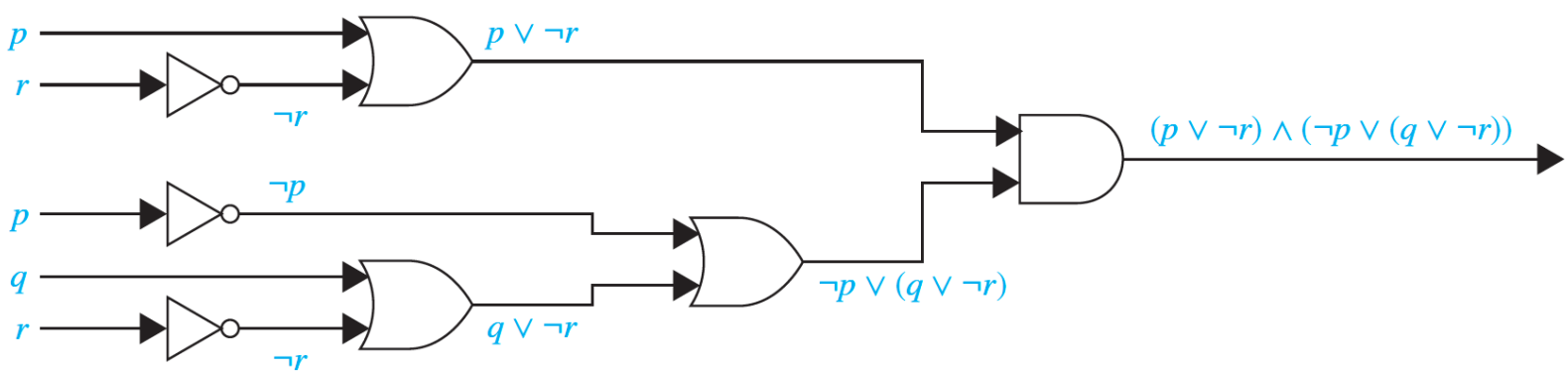

Homework after class

1.2 Applications of Propositional Logic

Exercises 2, 4, 7 and 12

Propositional Equivalences

Section 1.3

Section Summary 2

Tautologies, Contradictions, and Contingencies.

Logical Equivalence

- Important Logical Equivalences
- Showing Logical Equivalence

Normal Forms (*optional*)

- Disjunctive Normal Form
- Conjunctive Normal Form

Propositional Satisfiability

- Sudoku Example

1.3.1 Introduction

A *tautology* is a proposition which is always true.

- Example: $p \vee \neg p$

A *contradiction* is a proposition which is always false.

- Example: $p \wedge \neg p$

A *contingency* is a proposition which is neither a tautology nor a contradiction, such as p

P	$\neg p$	$p \vee \neg p$	$p \wedge \neg p$
T	F	T	F
F	T	T	F

1.3.2 Logically Equivalent

Two compound propositions p and q are logically equivalent if $p \leftrightarrow q$ is a tautology.

We write this as $p \Leftrightarrow q$ or as $p \equiv q$ where p and q are compound propositions.

Two compound propositions p and q are equivalent if and only if the columns in a truth table giving their truth values agree.

1.3.2 Logically Equivalent

This truth table shows that $\neg p \vee q$ is equivalent to $p \rightarrow q$.

p	q	$\neg p$	$\neg p \vee q$	$p \rightarrow q$
T	T	F	T	T
T	F	F	F	F
F	T	T	T	T
F	F	T	T	T

De Morgan's Laws

Augustus
De Morgan
1806-1871

$$\neg(p \wedge q) \equiv \neg p \vee \neg q$$ (the first De Morgan law)

$$\neg(p \vee q) \equiv \neg p \wedge \neg q$$ (the second De Morgan law)

This truth table shows that De Morgan's Second Law holds.

p	q	$\neg p$	$\neg q$	$(p \vee q)$	$\neg(p \vee q)$	$\neg p \wedge \neg q$
T	T	F	F	T	F	F
T	F	F	T	T	F	F
F	T	T	F	T	F	F
F	F	T	T	F	T	T

Key Logical Equivalences 1

Identity Laws: $p \wedge T \equiv p, \qquad p \vee F \equiv p$

Domination Laws: $p \vee T \equiv T, \qquad p \wedge F \equiv F$

Idempotent laws: $p \vee p \equiv p, \qquad p \wedge p \equiv p$

Double Negation Law: $\neg(\neg p) \equiv p$

Negation Laws: $p \vee \neg p \equiv T, \qquad p \wedge \neg p \equiv F$

Key Logical Equivalences 2

Commutative Laws: $p \vee q \equiv q \vee p, \quad p \wedge q \equiv q \wedge p$

Associative Laws:

$$(p \wedge q) \wedge r \equiv p \wedge (q \wedge r)$$

$$(p \vee q) \vee r \equiv p \vee (q \vee r)$$

Distributive Laws:

$$(p \vee (q \wedge r)) \equiv (p \vee q) \wedge (p \vee r)$$

$$(p \wedge (q \vee r)) \equiv (p \wedge q) \vee (p \wedge r)$$

Absorption Laws: $p \vee (p \wedge q) \equiv p \quad p \wedge (p \vee q) \equiv p$

TABLE 6 Logical Equivalences.

Equivalence	*Name*
$p \wedge \mathbf{T} \equiv p$ $p \vee \mathbf{F} \equiv p$	Identity laws
$p \vee \mathbf{T} \equiv \mathbf{T}$ $p \wedge \mathbf{F} \equiv \mathbf{F}$	Domination laws
$p \vee p \equiv p$ $p \wedge p \equiv p$	Idempotent laws
$\neg(\neg p) \equiv p$	Double negation law
$p \vee q \equiv q \vee p$ $p \wedge q \equiv q \wedge p$	Commutative laws
$(p \vee q) \vee r \equiv p \vee (q \vee r)$ $(p \wedge q) \wedge r \equiv p \wedge (q \wedge r)$	Associative laws
$p \vee (q \wedge r) \equiv (p \vee q) \wedge (p \vee r)$ $p \wedge (q \vee r) \equiv (p \wedge q) \vee (p \wedge r)$	Distributive laws
$\neg(p \wedge q) \equiv \neg p \vee \neg q$ $\neg(p \vee q) \equiv \neg p \wedge \neg q$	De Morgan's laws
$p \vee (p \wedge q) \equiv p$ $p \wedge (p \vee q) \equiv p$	Absorption laws
$p \vee \neg p \equiv \mathbf{T}$ $p \wedge \neg p \equiv \mathbf{F}$	Negation laws

More Logical Equivalences

TABLE 7 Logical Equivalences Involving Conditional Statements.

$$p \to q \equiv \neg p \vee q$$

$$p \to q \equiv \neg q \to \neg p$$

$$p \vee q \equiv \neg p \to q$$

$$p \wedge q \equiv \neg(p \to \neg q)$$

$$\neg(p \to q) \equiv p \wedge \neg q$$

$$(p \to q) \wedge (p \to r) \equiv p \to (q \wedge r)$$

$$(p \to r) \wedge (q \to r) \equiv (p \vee q) \to r$$

$$(p \to q) \vee (p \to r) \equiv p \to (q \vee r)$$

$$(p \to r) \vee (q \to r) \equiv (p \wedge q) \to r$$

TABLE 8 Logical Equivalences Involving Biconditional Statements.

$$p \leftrightarrow q \equiv (p \to q) \wedge (q \to p)$$

$$p \leftrightarrow q \equiv \neg p \leftrightarrow \neg q$$

$$p \leftrightarrow q \equiv (p \wedge q) \vee (\neg p \wedge \neg q)$$

$$\neg(p \leftrightarrow q) \equiv p \leftrightarrow \neg q$$

Notation

De Morgan's laws can be extend to

$$\neg(p_1 \wedge p_2 \wedge \cdots \wedge p_n) \equiv (\neg p_1 \vee \neg p_2 \vee \cdots \vee \neg p_n)$$

$$\neg(p_1 \vee p_2 \vee \cdots \vee p_n) \equiv (\neg p_1 \wedge \neg p_2 \wedge \cdots \wedge \neg p_n)$$

$$\neg\left(\bigwedge_{j=1}^{n} p_j\right) \equiv \bigvee_{j=1}^{n} \neg p_j$$

$$\neg\left(\bigvee_{j=1}^{n} p_j\right) \equiv \bigwedge_{j=1}^{n} \neg p_j$$

$\bigwedge_{j=1}^{n} p_j$ is used for $p_1 \wedge p_2 \wedge \ldots \wedge p_n$

$\bigvee_{j=1}^{n} p_j$ is used for $p_1 \vee p_2 \vee \ldots \vee p_n$

1.3.3 Using De Morgan's Laws

Use De Morgan's laws to express the negations of "Miguel has a cellphone and he has a laptop computer".

$$\boldsymbol{p \wedge q}$$

Solution:

p: "Miguel has a cellphone".

q: "Miguel has a laptop computer".

$$\neg(\boldsymbol{p} \wedge \boldsymbol{q}) \qquad \neg\boldsymbol{p} \vee \neg\boldsymbol{q}$$

"Miguel does not have a cellphone or he does not have a laptop computer."

the first of De Morgan's law