Experiment 14 Measurement of moment of inertia

The moment of inertia is a measurement of the inertia of a rigid body when it rotates. It is a physical quantity indicating the characteristics of a rigid body. The moment of inertia of a rigid body is not only related to the mass of the object, but also depends on the position of the axis of rotation and the distribution of mass, i.e. the distribution of shape, size and density. If the shape of a rigid body is simple and its mass is uniformly distributed, its moment of inertia about a particular axis can be directly calculated. For complicated or heterogeneous rigid bodies, the calculation will be very difficult, and often need to be determined by experimental methods, such as mechanical parts, motor rotors and gun projectiles.

To measure the moment of inertia, it is generally to make the rigid body move in a certain form, and transform the measurement through the relationship between the physical quantity representing the characteristics of this motion and the moment of inertia. In this experiment, the moment of inertia of rigid body is calculated by measuring the period of oscillation and other parameters by using the three-wire pendulum method and torsional pendulum method. In order to compare with the calculated value in theory, the measured rigid body of regular shape is generally adopted in the experiment.

1 trilinear pendulum

【The experiment purpose】

1. The relationship between the moment of inertia of a rigid body and its mass, shape (uniform density) and position of its axis is studied.

2. Learn how to measure the moment of inertia of a rigid body with a three-wire pendulum.

【The experimental principle】

When measuring a physical quantity in a physical experiment, in addition to direct measurement, the formula containing the physical quantity is generally used, and some difficult to measure in the formula are quantified into easy to measure, and measured

one by one, so as to calculate the physical quantity.

Figure 14—1 is the schematic diagram of the three-wire pendulum experimental device. The upper and lower disks are horizontal and suspended on the beam. Three symmetrically distributed equal-length suspensions connect the two disks. The upper disk is fixed, and the lower disk can move torsionally around the central axis OO'. When the footwall rotation Angle is small and the air resistance is omitted, the motion of the torsional pendulum can be approximated as a simple harmonic motion. According to the law of conservation of energy and the law of rotation of the rigid body, the moment of inertia of the rigid body about the central axis OO' can be derived:

$$J_0 = \frac{m_0 gRr}{4\pi^2 H} T_0^2 \tag{1}$$

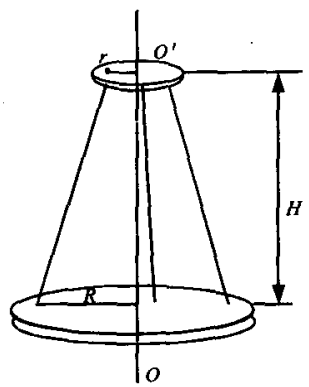

Figure 14—1 trilinear pendulum device

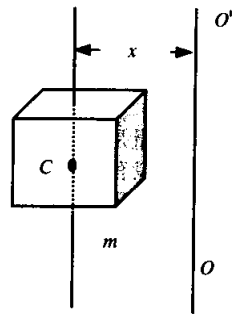

Figure 14—2 Parallel axis theorem

The meanings of each physical quantity are as follows: m_0 is the mass of footwall; r and R are the distances of the upper and lower hanging points from the center of their respective disks; H is the vertical distance between the upper and lower plates during balance; T_o is the period of simple harmonic motion of footwall, and g is the acceleration of gravity (in Hefei area $g = 9.7947\, m/s^2$).

The rigid body to be measured with mass m is placed on the footwall, and the rotating shaft of the rigid body to be measured is rejoined with the axis OO'. The movement period T_1 of footwall and the vertical distance between the upper and lower disks H_0 are measured. Similarly, the total moment of inertia of the rigid body to be

measured and the lower disk against the central axis OO' can be obtained as follows:

$$J_1 = \frac{(m_0 + m)gRr}{4\pi^2 H_0} T_1^2 \tag{2}$$

If suspension elongation due to weight change is excluded, there is $H_0 \approx H$. Then the moment of inertia of the object to be measured about the central axis is:

$$J = J_1 - J_0 = \frac{gRr}{4\pi^2 H}[(m + m_0)T_1^2 - m_0 T_0^2] \tag{3}$$

Thus, by measuring length, mass and time, the moment of inertia of a rigid body about an axis can be found.

The parallel axis theorem of moment of inertia can also be verified with a three-wire pendulum. As shown in Fig. 14-2, if the moment of inertia of a rigid body with mass m around its centroid axis is J, and when the parallel movement distance of the axis is x, then the moment of inertia of this rigid body with respect to the new axis OO' is $J_{OO'} = mx^2 + J_c$. This conclusion is called the parallel axis theorem of moment of inertia.

In the experiment, two cylinders with the same mass m', shape and mass distribution are placed symmetrically on the lower disk (the footwall has two rows of symmetrical holes). In the same way, by measuring the period of rotation T_x of the two small cylinders and the lower coil around the central axis OO', the moment of inertia of each cylinder against the central axis OO' can be obtained:

$$J_x = \frac{1}{2}[\frac{(m_0 + 2m')gRr}{4\pi^2 H} T_x^2 - J_0] \tag{4}$$

If the distance x between the center of the small cylinder and the center of the lower disk and the radius of the small cylinder R are measured, then the parallel axis theorem can be used to obtain:

$$J'_x = m'x^2 + \frac{1}{2} m' R_x^2 \tag{5}$$

The parallel axis theorem can be verified by comparing the magnitude of J_x and J'_x.

【Experimental apparatus】

Three-wire pendulum (including steel ruler, vernier caliper, electronic balance and rigid body to be measured) and FB210 photoelectric chronograph.

【The experiment content】

1. Measure the moment of inertia of a ring passing through its center of mass and perpendicular to the axis of the torus.

(1) Adjust the base level: adjust the three screw knobs on the base until the bubble in the level on the bottom plate is located in the middle.

(2) Adjust the footwall level: adjust the three knobs on the upper disk (adjust the length of the hanging line), change the length of the three hanging line, until the bubble in the footwall level is located in the middle.

(3) Measure the movement period T_0 of the empty disk rotating around the central axis: gently rotate the upper disk to drive the footwall to rotate, so as to avoid shaking when the three wires are placed in the torsional pendulum movement (note that the Angle of the torsional pendulum is controlled within 5^0). Period measurement using cumulative amplification method, that is, the timing tool to measure the accumulated time of multiple cycles, and then to find out its cycle of motion (think, why not directly measure a cycle?) .

(4) Measure the cycle of rotation of the ring to be measured and the footwall T_1: place the ring to be measured on the footwall, pay attention to make the centers of the two coincide, and measure the cycle of their movement T_1 together in the same way.

2. Test the parallel axis theorem with a three-wire pendulum.

The two small cylinders are placed symmetrically on the footwall, and the period of rotation T_x with the footwall and the spacing of the two small cylinders are 2x are

measured. Repeat the measurement 5 times, changing the position of the small cylinder.

3. Measurement of geometric parameters and mass of each rigid body.

(1) The distance r from the hanging point to the center and R(radius of the equilateral triangle circumcircle) are given by the laboratory.

(2) Measure the vertical distance H between the upper and lower disks with a steel ruler; Use vernier caliper to measure the diameter of the lower disk; The inner and outer diameter of the ring D_0 to be measured; Measure the diameter of the small cylinder; The distance between the center of the cylinder and the center of the lower disk x_i is measured directly by the ruler on the lower disk.

(3) he masses of the rings and the two cylinders are measured and recorded respectively by a balance (the mass of the lower disk m_0 has been marked on its surface).

【Data processing and analysis】

1. Calculate J_0、J_1 and J_x respectively according to formula (1), (3) and (4), estimate the uncertainty, and write down the measurement results.

2. Calculate the theoretical values according to Equations $J_0' = \frac{1}{8} m_0 D_0^2$、$J_1' = \frac{1}{8} m_1 (D_{inn}^2 + D_{ext}^2)$ (where D_0 is the diameter of the lower disk), (where m_1 is the mass of the ring to be measured, and D_{inn}, D_{ext} is the inner diameter and outer diameter of the ring to be measured) and (5).

3. Analyze and compare each group J and J', figure out the percentage error $\frac{|J_i' - J_i|}{J_i'} \times 100\%$, and see whether the parallel axis theorem is verified.

Rehearse the question

1. According to what conditions is formula (1) derived? How to ensure that these conditions are met in the experiment?

2. How to make the lower disk twist and swing? Any requirements?

Discussion

1．The three wires are placed in the swing and are damped by the air, the amplitude is getting smaller and smaller, does the period change? Why?

2．Can this experiment verify the parallel axis theorem graphically?

Experiment 21 Measurement of sound velocity

In this experiment, the function of piezoelectric ceramic (crystal) transducer is understood through the electrical measurement of ultrasonic propagation velocity, which is a non electric quantity, so as to deepen the understanding of standing wave and vibration synthesis theory. At the same time, through the measurement of sound velocity in liquid, the basic concept of underwater sonar technology application is understood.

【Purpose】

1. Learn to use different methods to measure the speed of sound;

2. Understand the function of piezoelectric ceramic transducer.

【Principle】

According to the wave theory, the relationship between the propagation velocity v of sound wave and the frequency f and wavelength λ of sound wave is as follows

$$v = f\lambda \qquad (1)$$

Therefore, as long as the frequency and wavelength of sound wave are measured, the sound velocity can be calculated. The frequency of sound wave can be read out by the oscillation frequency of the signal generator, and the wavelength can be measured by resonance method and phase comparison method. Time difference method can measure the propagation speed of sound wave by measuring the propagation time of sound at a certain interval.

1. Piezoelectric ceramic transducer

According to its working mode, piezoelectric ceramic transducer can be divided into longitudinal (vibration) transducer, radial (vibration) transducer and bending vibration transducer. Longitudinal transducers are mostly used in the teaching experiment of sound speed. Figure 21-1 shows the structure of the longitudinal transducer.

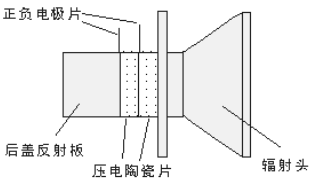

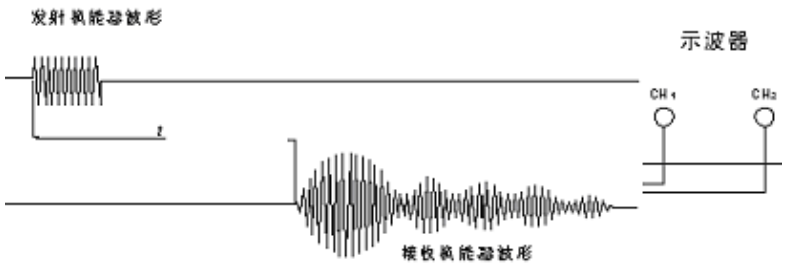

Fig. 21－1 Piezoelectric ceramic transducer. Fig.21-2 Sound velocity measurement by time difference method

2. Measuring wavelength λ by resonance method

The sound wave (frequency f) emitted by the sound source propagates to the receiver through the medium (air), and the receiver reflects part of the sound wave signal while receiving the sound wave signal. If the receiving surface is strictly parallel to the transmitting surface, the incident wave is reflected vertically on the receiving surface, and the incident wave interferes with the reflected wave to form a standing wave. The reflection surface is the node of displacement and the antinode of sound pressure. By changing the distance x between the receiver and the transmitter, a stable standing wave resonance phenomenon appears in the air at a series of specific distances. At this time, x is equal to the integral multiple of half wavelength, and the amplitude of standing wave reaches the maximum; At the same time, the antinode of sound pressure on the receiving surface also reaches the maximum correspondingly. Through the piezoelectric conversion, the voltage value of the generated electrical signal is also the largest (the amplitude of the waveform displayed by the oscilloscope is the largest). Therefore, if the frequency remains unchanged, the wavelength λ of the wave can be obtained by measuring the distance Δx between the receiving surfaces when the two adjacent received signals reach the maximum

$$\lambda = 2\Delta x \qquad (2)$$

The sound velocity is calculated by $\boldsymbol{v} = \boldsymbol{f} \cdot \lambda$.

3. Measuring wavelength by phase comparison method

After the sound source emits sound waves, a sound field is formed around the sound source. The vibration phase of the sound field at any point in the medium changes with time, but the phase difference $\Delta\phi$ between the sound field and the vibration of the sound source does not change with time.

Let the sound source equation be written as

$$y = y_0 \cos \omega t$$

The vibration received at S_2 away from the sound source x is

$$y' = y_0' \cos \omega \left(t - \frac{x}{v}\right)$$

Phase difference of two vibrations

$$\Delta\phi = \omega \frac{x}{v}$$

If the two vibrations are input to the x-axis and Y-axis of the oscilloscope

respectively, then when $x = n\lambda$, the combined vibration is a straight line with positive slope. When $x = (2n+1)\frac{\lambda}{2}$, the resultant vibration is a straight line with a negative slope. When x is any other value, the resultant vibration is an ellipse.

Moving the receiver. When its combined vibration is a straight lineand the slope of the figure changes once, the distance of the receiver moving

$$\Delta x = (2n+1)\lambda/2 - n\lambda = \lambda/2 \qquad (3)$$

Therefore

$$\lambda = 2\Delta x$$

【Experimental apparatus】

Sound speed measuring device, oscilloscope, etc.

The sound velocity measuring instrument is mainly composed of liquid storage tank, transmission mechanism, digital scale and piezoelectric transducer. The piezoelectric transducer is placed in the reservoir, and no liquid is added into the reservoir when measuring the sound speed of air; When measuring the sound speed of liquid, add liquid into the tank. The transducer S_1 for transmitting ultrasonic wave is fixed on the left side of the liquid storage tank, and the other transducer S_2 for receiving ultrasonic wave is installed on the movable slider. The relative displacement of the transducer is driven by the transmission mechanism, and the displacement distance is displayed by the digital display meter.

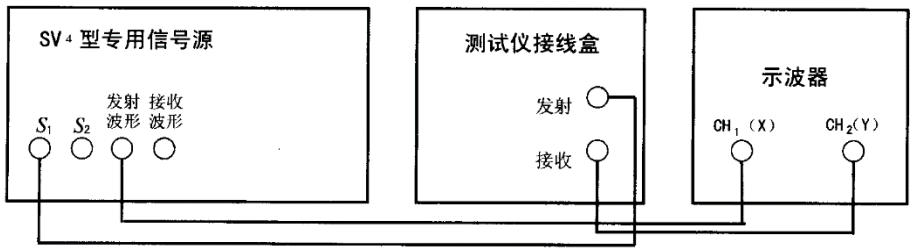

Fig. 21-3 measurement connection diagram of resonance interferometry and phase method

【Expreiment content】

1. Connection between sound speed measurement system and oscilloscope

(1) When measuring sound speed, the connection method of special signal source, tester and oscilloscope is shown in figure 21-3. Adjust the oscilloscope.

(2) The transmitting end of the special signal source S_1 is connected to the transmitting end of the tester, the receiving end of the tester is connected to the receiving end of the oscilloscope $CH_2(Y)$, and the transmitting waveform of the special signal source is connected to the oscilloscope $CH_1(X)$. The sound speed test method of special signal source is set to "continuous wave", the sound speed medium is set to "air", and the emission intensity is adjusted clockwise to the maximum.

2. Adjustment of resonance frequency

(1) Adjust the oscilloscope to clearly observe the synchronous sine wave signal.

(2) Close the two acoustic energy conversion probes S_1、S_2, adjust the "coarse frequency adjustment" of the special signal source, and observe the voltage amplitude change of the received wave. The voltage amplitude is the largest at a certain frequency point (34.5khz-39.5khz, which varies with different transducers or media). This frequency is the matching frequency point of the piezoelectric transducer S_1、S_2.

(3) Change the distance between the two acoustic energy conversion probes S_1、S_2 to make the sine wave amplitude of the oscilloscope maximum. Adjust the "frequency fine tuning" of the special signal source again until the sine wave amplitude displayed by the oscilloscope reaches the maximum value. Record the frequency f.

3. Measuring sound velocity by resonance interferometry

(1) Move the receiving probe S_2 close to the transmitting probe S_1 (be careful not to touch it), and then move S_2 away slowly. When the maximum amplitude signal appears on the oscilloscope, record the position x_1.

(2) Move $\boldsymbol{S}_2$ in turn, and record the psitions of $\boldsymbol{x}_2$, $\boldsymbol{x}_3$, $\cdots \boldsymbol{x}_{20}$ with the maximum amplitude, a total of 20. When measuring, it should move in one direction, and should not turn upside down.

(3) Note the room temperature T at the time of the experiment.

4. Sound velocity measurement by phase comparison method

(1) On the basis of resonance interferometry, the ellipse can be observed by pressing the X-Y control key of the oscilloscope and properly adjusting the sensitivity of X and Y axes of the oscilloscope.

(2) Make S_2 slightly close to S_1, and then slowly move away from S_2. When a straight line with positive slope appears on the oscilloscope screen, record the position x_1' of S2.

(3) Move S2 and record the corresponding positions x_2'、x_3'、…x_{20}' of S2 when the straight line with negative and positive slope on the oscilloscope appears.

(4) Note the laboratory temperature T.

【Expreiment data and analysis】

(1) Self-made form, record all the experimental data. The design of the table should be convenient for the difference and calculation of the corresponding position by the successive difference method.

(2) According to the successive minus method to process the data, first calculate average value of 10λ. Then calculate the standard deviation according to the formula:

$$\Delta_{10\lambda} = \sqrt{(S_{10\lambda})^2 + (\Delta_{仪})^2}$$

And get $\Delta_{10\lambda}$. At the same time, the error of the instrument should be considered. The reading ruler used in this experiment is a screw micrometer and a digital vernier caliper, and its indication error limit is 0.03mm.

(3) Δ_λ can be achieved based on $\Delta_{10\lambda}$ .Then the measurement results of wavelength $\lambda = \overline{\lambda} \pm \Delta_\lambda$ can be obtained. Δ_v can be derived based on $v = f\lambda$. The uncertainty of frequency is $\Delta_f \approx 10Hz$. Finally, the complete result of v is given.

(4) Calculate the theoretical value v_S according to the formula $v_S = v_0\sqrt{\frac{T}{T_0}}$ (in

air)(where V_0 = 331.45m/s is the sound speed at t_0 = 273.15k, t = t + 273.15k). And v is compared with v_S, expressed by percentage error, and the cause of error is analyzed.

Preview thinking questions

1. How to measure the speed of sound? What physical quantities are measured?

2. How to adjust and judge whether the measuring system is in resonance state?

Discussion questions

1. What is the relationship between sound speed and temperature in air? When the temperature drops, will the frequency and wavelength of sound wave change?

Experiment 26 The Hall Effect

The Hall effect was discovered by Edwin Herbert Hall in 1879. Hall Effect is a process in which a transverse electric field is developed in a solid material when the material carrying an electric current is placed in a magnetic field that is perpendicular to the current. This effect is the basis of many practical applications and devices such as magnetic field measurements, and position and motion detectors.

Practice 1

Measurement of Internal Magnetic Field in Charged Straight Solenoid Based on The Hall Effect

[Experimental Objectives]

1. Understand the phenomenon of the Hall Effect. Master the principle of measuring the magnetic field based on the Hall Effect.
2. Master the method of measuring the axial magnetic induction distribution in charged straight solenoid.

[Experimental Theory]

1. The Hall Effect

The Hall effect is illustrated in Fig. 26-1. A thin slab (thickness d) of a semiconductor to be studied is placed in a magnetic field B oriented vertically to the slab. A current I is arranged to flow through the slab from left to right, and the voltage difference between the faces a & b is called Hall voltage.

The simple theory of the Hall voltage is as follows. Suppose the sample is a p-type semiconductor. If a charge q moves with velocity v through a magnetic field $\boldsymbol{B}$ then a Lorentz force $\boldsymbol{f}_B$ acts on the charge, where

$$\boldsymbol{f}_B = q(\boldsymbol{v} \times \mathrm{B}) \quad (1)$$

The force deflects the charges toward one side of the slab. The result of this deflection is to cause an accumulation of charges along one side of the slab which creates a transverse electric field $\boldsymbol{E}$ that counteracts the force of the magnetic field. Positive

charges will therefore move upwards towards face *b* and because an excess charge accumulates on face *b* with a corresponding shortage on face *a*, a voltage, the Hall voltage develops. The Hall voltage increases until it exactly balances the force due to the magnetic field and equilibrium is reached. Hence,

$$q(\boldsymbol{v}\times\mathrm{B}) = -q\mathrm{E} \quad . \qquad (2)$$

Consider a p-type slab with width ω and thickness d. Assume the conductor to have charge carrier number density p (i.e., number of carriers per unit volume) and charge carrier drift velocity v when a current I_H flows through the slab. $I_H = pqv\omega d$. Substituting $v = I_H / pq\omega d$ into Eq. (2), we obtain

$$E = |\boldsymbol{v}\times\mathrm{B}| = \frac{I_H B}{pq\omega d} \quad . \qquad (3)$$

Multiplying by ω on both sides, we have

$$U_H = E\omega = \frac{I_H B}{pqd} = R_H \frac{I_H B}{d} \quad , \qquad (4)$$

where R_H is known as the Hall coefficient, $R_H = \frac{1}{pq}$. In practice it is usually written as,

$$U_H = K_H I_H B, \qquad (5)$$

where the proportionality coefficient K_H is called the sensitivity of the Hall component, $K_H = R_H / d = 1/pqd$. The unit of K_H is $[\mathrm{mV}\cdot\mathrm{mA}^{-1}\cdot\mathrm{T}^{-1}]$. The bigger is the value of K_H, the better is the Hall effect. Note that the Hall field is large for low carrier concentrations: we might expect that the effect will be harder to detect in metals than in semi-conductors.

It can be seen from Eq.(5) that when the sensitivity of the Hall component K_H is

known, the magnetic field ***B*** can be calculated if we have measured I_H and U_H. This is the theory of measuring the magnetic field by the Hall effect.

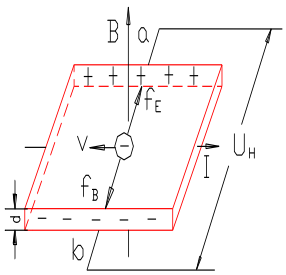

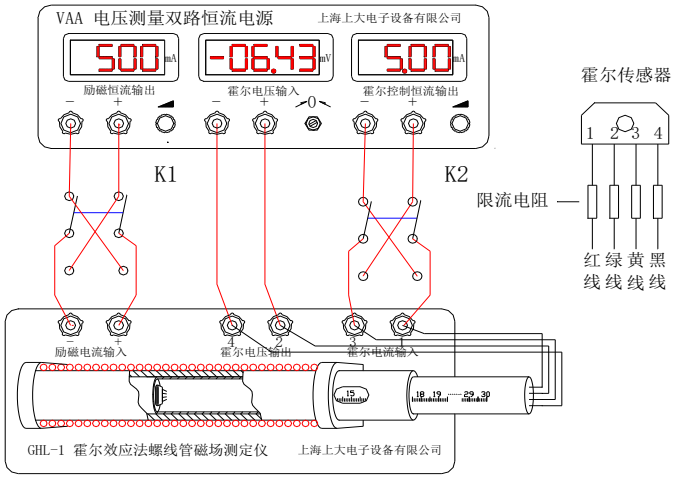

Fig.26-1 Fig.26-2 GHL－1 the setup of charged solenoid

The Hall coefficient thus gives a direct indication of the sign of the charge carriers; it is negative for electrons ($q = -e$) and positive for holes ($q = +e$).

2. The Side Effects and Eliminating Method for Hall Component

Generally there are four lead wires of a Hall component. Two of them are “current input ends” connecting to an adjustable power supply circuit, and the others are “voltage output ends” connecting to a digital voltmeter. In theory, the Hall voltage is zero when $B = 0$. In practice this does not hold true because of asymmetries in the probe element and voltage measurement contacts, inhomogeneous crystallization and thermomagnetic effect. Thus, even for $B = 0$, when a current I_H flows a residual voltage will be measured. The specific categories are as follows:

1) Unequal Potential Voltage U_0

In practice, even for $B = 0$, when a current I_H flows a voltage U_0 will be measured due to the voltage drop along the length of the sample or differences in the resistivity of various parts of the sensing element. The direction of U_0 is related to that of the

current, not related to that of the magnetic field. The value of U_0 is in the same order as or larger than that of the Hall voltage U_H. 。U_0 is at the top place in all residual voltages.

2) Etinghausen Effect

When a Hall strip is placed with its plane perpendicular to a magnetic field and an electric current is sent longitudinally through the strip, corresponding points on opposite edges of the strip have different temperatures. Thus a thermoelectric voltage U_E is produced. The value of U_E is directly proportional to the product of I and B. Its direction depends on that of I and B.

3) Nernst Effect

The Nernst effect is the transverse electric field produced by a longitudinal thermal gradient in the presence of a magnetic field. The corresponding residual voltage is U_N. The direction of U_N is related to that of the magnetic field, not related to that of the current.

4) Righi-Leduc Effect

This effect is a thermomagnetic one. When an electrically open conductor in which a temperature gradient and a heat flow are maintained is placed in a constant magnetic field, there is established a difference in temperature in the direction perpendicular to the primary heat flow and the magnetic field. Then a residual voltage U_{RL} is produced. The direction of U_{RL} is related to that of the magnetic field, not related to that of the current.

In practical measurement, in order to eliminate the influence of the side effects we can record four sets of data by changing the directions of I_H and B respectively. Set it be positive when the switch S_1 or S_2 is up.

When I_H and $\boldsymbol{B}$ are both positive: $U_1 = U_H + U_0 + U_E + U_N + U_{RL}$

When I_H is negative and $\boldsymbol{B}$ is positive: $U_2 = -U_H - U_0 - U_E + U_N + U_{RL}$

When I_H and $\boldsymbol{B}$ are both negative: $U_3 = U_H - U_0 + U_E - U_N - U_{RL}$

When I_H is positive and $\boldsymbol{B}$ is negative: $U_4 = -U_H + U_0 - U_E - U_N - U_{RL}$

Compute $U_1 - U_2 + U_3 - U_4$, and average the result, we obtain

$$\frac{1}{4}(U_1 - U_2 + U_3 - U_4) = U_H + U_E$$

The influence of U_E can not be eliminated because its direction is always the same as that of U_H. Considering that $U_E << U_H$, U_E can be ignored. Thus,

$$U_H = \frac{1}{4}\left|(U_1 - U_2 + U_3 - U_4)\right| \qquad (6)$$

3. The Theoretical Value of Magnetic Induction Intensity at the Central Point of a Charged Straight Solenoid

Based on the Biot-Savart's law, the magnetic induction intensity at the central point of a charged straight solenoid is,

$$B_{\text{center}} = \frac{\mu N I_M}{\sqrt{L^2 + \bar{D}^2}} \quad . \qquad (7)$$

The magnetic induction intensity at the two axial ends of the solenoid can be written as,

$$B_{\text{end}} = \frac{1}{2} B_{\text{canter}} = \frac{1}{2} \bullet \frac{\mu N I_M}{\sqrt{L^2 + \bar{D}^2}} \quad , \qquad (8)$$

where μ is magnetic conductivity of the medium, in vacuum $\mu_0 = 4\pi \times 10^{-7}$T*m/A, N is total number of turns of the solenoid, I_M is exciting current of the solenoid, L is the length of the solenoid and $\bar{D}$ is average diameter of the solenoid.

[Equipment Needed]

GHL-1 charged solenoid experimental equipment, Double pole double throw (DPDT) change-over switch, VAA dual constant current power supply for voltage

measurement

[Experimental Procedure]

1. The field current input of the solenoid experimental equipment is connected to the field constant current output of VAA power supply through the switch K_1. The Hall current input of the solenoid experimental equipment is connected to the Hall controlled constant current output of VAA power supply through the switch K_2. The Hall voltage output of the solenoid experimental equipment is connected to the Hall voltage input of VAA power supply.

2. Place the probe at the center of the solenoid, namely at the position of 15cm. Set the Hall controlled constant current I_H to a value of 5.00mA. Increase the field current I_M to 0、100、200、300、400、500、600、700、800、900、1000mA successively. Change the direction of DPDT switch (i.e., change the directions of I_H and B). Then record the Hall output voltages U_1、U_2、U_3、U_4 in table26-1 respectively.

3. Set the field current I_M to a value of 500mA and set the Hall current I_H to a value of 5.00mA. Measure the Hall voltages at the positions of 0.0、1.0、2.0、3.0、4.0、5.0、7.0、9.0、12.0、15.0、18.0、21.0、23.0、25.0、26.0、27.0、28.0、29.0、30.0cm at the axis of the solenoid. The direction of DPDT switch should be changed at each position, and the Hall output voltages U_1、U_2、U_3、U_4 are recorded in table26-2 respectively.

$I_M\ (mA)$	$U_1(mV)$	$U_2(mV)$	$U_3(mV)$	$U_4(mV)$	$U_H(mV)$
0					
100					
200					
300					
400					
500					
600					
700					
800					
900					
1000					

Table 26-1 The relation of the field current and the Hall potential difference

$X\ (cm)$	$U_1(mV)$	$U_2(mV)$	$U_3(mV)$	$U_4(mV)$	$U_H(mV)$	$B\ (mT)$
0						
1						
2						
3						
4						
…						
29						
30						

Table 26-2 The data of axial magnetic distribution of the solenoid

[Data Analysis]

1. The relation of the field current and the Hall potential difference

(1) Prove that the Hall potential difference and the magnetic induction intensity in solenoid are in the direct ratio. Calculate the Hall voltages with Eq.(6) and fill the results in table26-1. By using graphic method or least square method the slope *K* of the straight line of $U_H - I_M$ can be obtained, $K = \frac{\Delta U_H}{\Delta I_M}$.

(2) Calculate the sensitivity K_H of the Hall sensor. Compare K_H with the nominal sensitivity of the Hall sensor given by the instrument and calculate the percent error.

The sensitivity K_H of the Hall sensor is, $K_H = \frac{\Delta U_H}{I_H \Delta B}$. Because the parameter of the solenoid is not infinitely long in the experiment, the magnetic induction intensity ***B*** should be calculated by Eq.(7), that is,

$$K_H = \frac{\Delta U_H}{I_H \Delta B} = \frac{\sqrt{L^2 + \overline{D}^2}}{\mu N I_H} \frac{\Delta U_H}{\Delta I_M} = \frac{\sqrt{L^2 + \overline{D}^2}}{\mu N I_H} K$$

Where the total number of turns of the solenoid is N=3000T, the length of the solenoid is L＝0.26m, and the average diameter of the solenoid is $\overline{D} = 0.035\,\mathrm{m}$.

2. Measurement of axial magnetic distribution of the charged solenoid

(1）Plot the magnetic distribussion B against X.

Using Eq.(6) and $B = \frac{U_H}{K_H I_H}$ compute the Hall voltage U_H and the magnetic induction intensity ***B.*** In calculation K_H is substituted by the nominal sensitivity of the Hall sensor. Fill the results in table26-2. Take the position coordinate X as the abscissa and the magnetic induction intensity B as the ordinate, plot B against X on a millimeter squared paper.

(2）Setting the range of magnetic variation less than 1% as homogeneity range, the average magnetic induction intensity of homogeneity range $\overline{B}_0{}'$ is computed and marked on the drawing. The scope of homogeneity range (including the position and the length) also need to be plotted on the drawing.

(3) “Boundary Points” of the solenoid are usually defined as the points with half central magnetic induction intensity. They are denoted by P and P', that is, $B_P = B_{P'} = \frac{1}{2}\overline{B}_0{}'$. Mark the position coordinates of P and P' on the drawing. Measure the distance between P and P'. Compare the distance with the length L of the solenoid.

（4）Calculate the experimental and theoretical values of magnetic induction intensity in midpoint and endpoint of the solenoid. Compare the two results and

calculate the percent error. Analyze the causes of errors.

[Notes]

1. Pay attention to the observation of unequal position effect of Hall element in the experiment. Try to eliminate its influence on the measurement results.

2. The excitation coil should not be energized for a long time. Otherwise, the coil will generate heat, which will affect the measurement results.

3. The hall element has a certain temperature coefficient. In order to reduce the influence of its own heating on the measurement, it should not exceed its rated working current of 5mA.

Preview Questions

1. Why need two changeover switches in this experiment? What roles does each of the switches play?

2. What physical quantities should be measured when we measure the magnetic field by using the Hall component?

Discussions

1. If there exist different number of turns in one unit length or inhomogeneous winding in solenoid winding, what will happen in the experiment? When drawing a distribution diagram of B-X, whether the end position in electromagnetics coincides with the geometrical end of the solenoid?

2. Does the magnetic field can be measured exactly if the magnetic field is not perpendicular to the Hall strip?

Experiment 31 Adjustment and Usage of Michelson Interferometer

Michelson interferometer is a kind of precision optical instrument based on the interference principle of light, which has been widely used in modern physics and measurement technique. Michelson interferometer can be used to measure the wavelength of optical wave, the small length, the coherence length of the light source, and the influence of physical factors such as temperature, pressure, electric field, magnetic field and medium motion on the propagation of light.

[Purpose]

1. To master the principle, structure and adjustment of Michelson interferometer.

2. To understand the formation conditions and fringe shapes of the localized interference and the non-localized interference.

3. To study how to measure the wavelength of monochromatic light by using Michelson interferometer.

[Theory]

1. Intervene theory of interferometer

Figure 31-1 shows the optical path diagram of Michelson interferometer. M_1 and M_2 are two finely polished plane mirrors, and G_1 and G_2 are two glass sheets. G_2 is parallel to G_1, and has the same material and thickness with G_1. The semi-reflective film K is coated on the glass G_1, which makes the light on the G_1 reflect and incident equally. Moreover, G_1 and G_2 are at an angle 45° to M_1 and M_2.

Light from a monochromatic source S is incident on the glass sheet G_1 (noted as beam splitter), then is divided into two beams with equal amplitude (or intensity), which are transmitted light 1 and reflected light 2, respectively. Light 1 passes through the glass sheet G_2, travels to mirror M_1, and reflected back to K. 50% of the returning beam is then reflected by the beam splitter and strikes the screen E. Light 2 travels to mirror M_2, where it is reflected. 50% of this beam passes straight through beam splitter and reaches the screen E. The above two beams are splitted by one light, so they are coherent light. As long as we carefully regulate the position of M_1 and M_2, interference fringes can be observed at E. As a compensation board, G_2 is used to make the interferometer meet the requirements of equal optical path.

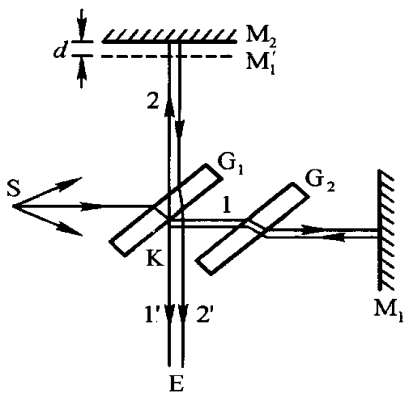

Figure 31-1 Optical path diagram of Michelson interference

The mirror M_1 in figure 31-1 is fixed and mirror M_2 can be moved parallelly on the precision guide rail to change the optical path difference between 1 and 2. M_1' is the virtual image of M_1 formed by the semi-reflective film K in G_1. The observer in position E thinks that light 1 seems to come from mirror M_1'. Hence, the interference generated by the interferometer is equivalent to that produced by the air film with d thickness.

The inclination of M_1 and M_2 can be regulated by three adjustable screws existing behind these two mirrors. After carefully adjustment, when $M_1 \perp M_2$, then $M_1' // M_2$. If d is the distance between M_1' and M_2, for light with an incident angle of δ in figure 31-2, the optical path difference of two parallel beams 1 and 2 reflected by M_1 and M_2 can be described as:

$$\Delta = 2d\cos\delta \tag{1}$$

When d is fixed, the optical path difference Δ only changes with the incident angle δ. Therefore, the light cone with the same incident angle has the same optical path difference, and the interference fringes are concentric circles. The formation condition of the k order bright stripe is as follows:

$$\Delta = 2d\cos\delta = k\lambda \quad (k=1,2,3...) \tag{2}$$

Where λ is the wavelength of monochromatic light. According to formula (2):

(1) When d is fixed, the smaller the angle is, the larger the optical path difference is, inducing the higher value of k of interference fringes. When δ=0, the optical path difference has the maximum value, and the k value of interference fringe at the center of the circle is the highest.

$$\Delta = 2d = k\lambda \quad (k=1,2,3...) \tag{3}$$

(2) As the value of d increases, for any level of interference fringes (such as level k), $\cos\delta$ reduces according to formula (2), inducing the increase of δ, which makes the interference stripes move outward, the center stripe "pop out", and the whole stripe become thin and dense; Conversely,

when d is reduced, the interference stripes move inward, the center stripe "sink" inward and disappear, and the whole stripes become thicker and thinner. “Popping out” or “sinking” one circular ring means that the d value changes by λ/2 (why?). The relationship between Δd and the number of circular ring (N) “Popping out” or “sinking” is described as follows:

$$\Delta d = \frac{1}{2} N\lambda \tag{4}$$

The optical wavelength λ can be obtained by measuring the Δd value and counting the corresponding N number. Conversely, if the wavelength of incident light λ is known, the value of Δd can be obtained. This is the principle of using interferometers to accurately measure the wavelength of light waves or length.

2. Patterns of interference stripes

In Michelson interferometer, M_1 and M_2 can be regarded as two coherent light sources. Therefore, non-localized interference fringes and localized interference fringes can be observed in Michelson interferometer. Localized interference is usually divided into equal inclination interference and equal thickness interference. In this experiment, the non-localized interference fringes are mainly observed. Moreover, the wavelength of He-Ne laser is further measured by the non-localized interference fringes. The observation of localized interference fringes is the optional content.

(1) Non-localized interference fringes

The multi-beam fiber laser is used as the light source (the laser usually needs a beam expander, while in multi-beam fiber laser, any beam of light is equivalent to a point light source). The spherical wave is divided into two beams of light by the beam splitter G_1, and then shot at the two mirrors respectively. Reflected by M_1 and M_2, two coherent spherical waves are caught along the direction of eye’s observation, which seems to come from two virtual point light S_1’ and S_2 behind mirror M_2, as shown in Fig. 31-2. Two rows of spherical waves produced by two virtual point light sources can interfere where they meet, and the interference fringes are non-localized, so they are called non-localized interference. The patterns of non-localized interference vary with the direction and position of the viewing screen. When the observation screen is perpendicular to the line between S_1’ and S_2, it will be a concentric circle stripe, and the center of the circle is the intersection point of the observation screen and the extension of the line between S_1’ and S_2. When rotating or moving the

observation screen, you can see interference patterns with several shapes such as ellipse, hyperbola and straight line.

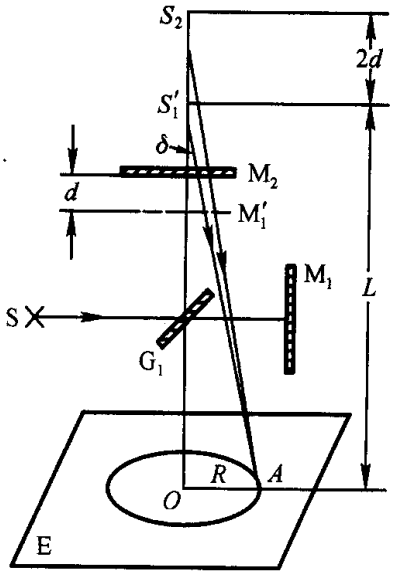

Figure 31-2 Optical path diagram of non-localized interferometric

(2) Localized interference fringes

When extended surface light such as sodium lamps are used as sources, the localized interference fringes can be obtained. As shown in Fig. 31-3, when M_1' parallel to M_2, an equal inclination interference fringe equivalent to a parallel plate is obtained, and its interference pattern is located at infinity. If a convergent lens is placed at E and a light screen is placed on its focal plane, a set of concentric circles can be observed on the screen. In the case of point light source, the equal inclination interference is actually a special case when placing the screen at infinity.

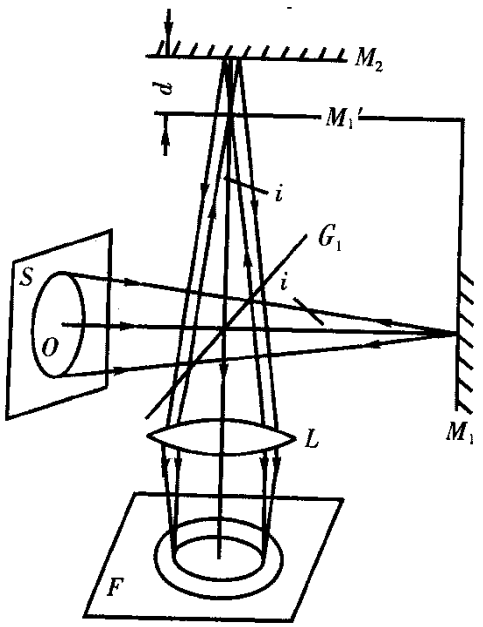

M_1, M_2: Plane mirror; G1: Beam splitter; S: Extended surface light source; L: Imaging mirror; F: Observation screen

Fig .31-3 Optical path diagram of localized interference-equal inclination interference

If M_1 and M_2 is not completely perpendicular, a small angle will be formed between M_1' and M_2, and the equal thickness interference fringes can be obtained from the air wedge formed by M_1' and M_2. When the incident angle is small, the optical path difference can be approximately described as:

$$\Delta = 2D\cos\theta \approx 2d[1-2\sin^2(\theta/2)] \approx 2d - d\theta^2 \tag{5}$$

Clearly, when d=0, and Δ=0, it is the linear and bright stripes. While around the intersecting of edge, Δ mainly depends on d ($\Delta \approx 2d$) due to the fact that d→0, and θ→0, the shape of the stripe is approximately a straight line. Moreover, $d\theta^2$ cannot be ignored where the location is far away from the intersection of edge. Thus, interference fringe will be bent, and the bending direction is convex to the intersection of edge. Typically, interference fringe will bend more where the location is far more distant.

(3) Coherence

The coherence of the light source can be described by temporal coherence and spatial coherence. Michelson interferometer is a typical instrument for measuring time coherence. For simplicity, we observe the variation rule of the center of the interference ring. For a particular light source, the plane mirror M_2 of the interferometer is adjusted to increase the d value. While the

interference rings pop out one by one, the definition of the interference ring is getting worse and worse. When the d increases to a certain distance d', the interference fringe is almost invisible, and we denote 2d'=ΔL as the coherent length of the light source. Moreover, the time t=ΔL/c (c is the speed of light) corresponding to this coherence length is called coherence time.

There are two explanations for the temporal coherence of the light source. One explaniation considers that the light emitted by a light source is a wave train with finite length. When the optical path difference between two beams of light in the Macleson interferometer is greater than the length of the wave train, a train of electromagnetic waves is divided into two wave train by the splitter plate G_1. They are reflected back from M_1 and M_2, respectively, and no longer meet at E, inducing no interference phenomenon. Only when the optical path difference between the two beams is less than the length of the wave train, there is the possibility of meeting at G_1 after the reflection from M_1 and M_2. Thus, the interference phenomenon is observed, and the length of the wave train represents the coherent length. Another explanation is that the light emitted by the actual light source can not be absolutely monochromatic, and there is always a certain wavelength range, which can be expressed by spectral linewidth Δλ. In other words, for the central wavelength λ_0 of a monochromatic light, this monochromatic light is actually made up of light waves with wavelength in the range of $\lambda_0 \pm \Delta\lambda/2$. According to the interference principle of light, each wavelength of light has its own interference pattern. With the increase of d value, the interference pattern of each wavelength is gradually staggered, and the clarity of the total interference pattern is getting worse and worse. When the staggered value reaches a central wavelength λ_0, the interference fringes are invisible. The combination of these two explanations connects the monochromaticity of the light source with the temporal coherence, which can be expressed in mathematical terms:

$$\Delta L = \frac{\lambda_0^2}{\Delta\lambda} \tag{6}$$

The better the monochromaticity of the light source is, or the smaller the Δλ is, the longer the coherent length is. The relationship between the coherent time t and Δλ can be described as:

$$t = \frac{\Delta L}{c} = \frac{\lambda_0^2}{c\Delta\lambda} \tag{7}$$

In the actual light source, the laser emitted from helium-neon laser has a good monochromaticity. For the spectral line of 632.8 nm, the value of Δλ is only 10^{-4}-10^{-5} nm, so the

value of coherent length ranges from a few meters to a few kilometers. For commonly used sodium lamps and mercury lamps, their $\Delta\lambda$ are 10^{-1}-10^{-2} nm, and the value of coherent length ranges from several to dozens of millimeters. Moreover, the coherent length of white light only has the order of magnitude of its wavelength.

4. The interference of white light

Because white light is polychromatic light, its coherent length is very short, so it is not easy to interfere. Only around the value of d=0, and the value of Δ is not more than a few wavelengths, the interference patterns can be seen. At the intersection of M_1' and M_2 (d=0), $\Delta=\lambda/2$ for light of various wavelengths, and a black straight line can be seen at E, which is denoted as the central pattern with a dozen colorful patterns symmetrically distributed on both sides. With the slightly increase of d value, the light and dark lines overlap each other, inducing no phenomemon of interference stripes. So only white light can be used to judge the central pattern and the location of d=0.

[Experimental instruments]

Michelson interferometer, multi-beam fiber laser source, sodium lamp, incandescent lamp, convex lens, frosted glass screen.

1. Structure of Michelson interferometer

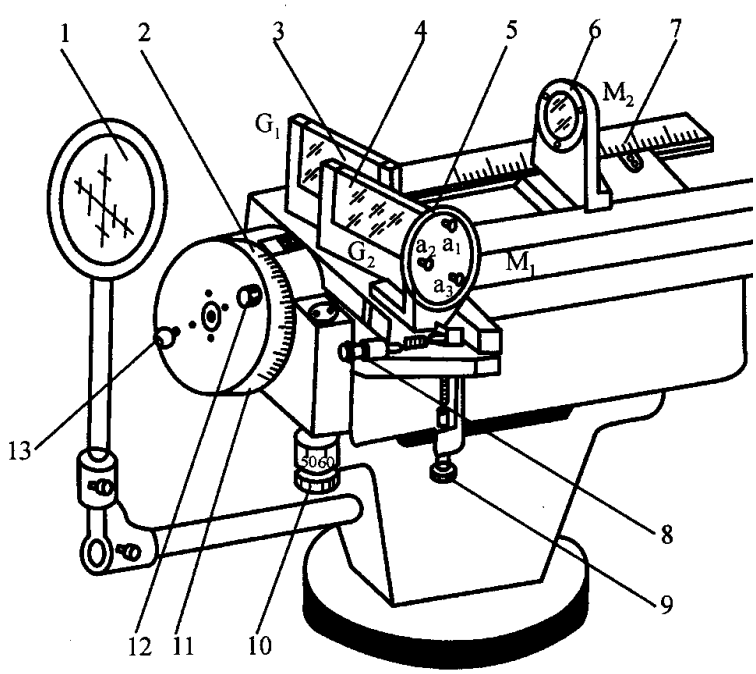

1. Observation screen; 2. Rough handwheel; 3. Beam splitter; 4. Compensation board; 5. Fixed mirror; 6. Movable mirror; 7. Guide rail gauge; 8. Horizontal fine-tuning; 9. Vertical fine-tuning;

10. Fine-tuning handwheel; 11. Calibrated drum; 12. Lock screw; 13. Rough handle

Fig. 31-4 Schematic diagram of Michelson interferometer

As shown in figure 31-4, the guide rail of Michelson interferometer is fixed on a stable base supported by three leveling screws, and the lead screw pitch is one millimeter. By means of rough hand wheel and slit nut, the lead screw can be twirled one circle to let the movable mirror slide one millimeter on the guide rail, which is called coarse control. When the moving distance is greater than one millimeter, it can be read on the millimeter calibrated scale. If not, it can be read through the window on the dial. There are 100 equal sections in dial disc. Thus, when the dial disc is twirled one scale division through rough handwheel, it means that the movable mirror move forward (or backwards) 0.01 mm. The movable mirror can realize fine adjustment by fine-tuning handwheel. When fine-tuning handwheel is twirled one circle, the rough handwheel is twirled one scale division. There are 100 scale divisions in the disc of fine-tuning handwheel, in which one scale division means 0.0001 mm. The inclination angles of movable mirror and reference mirror can be adjusted through knurled screws behind the mirrors. The adjustment range of each screw is finite. When the screw is screwed too loose, moving the mirror will produce vibration, thus leading to the change of the inclination angle. When the screw is screwed too tight, it will induce the irregular shape of the interference stripe. Therefore, the adjustment of the screw should be in the proper range that can influence the interference stripe, too tight or too loose is forbidden. moreover, the interference pattern can be moved horizontally by the adjustment of the horizontal fine-tuning screw, and can also be moved in the vertical direction by the adjustment of the vertical fine-tuning screw.

2. Multi-beam fiber laser power

Based on the medium power laser tube with the wavelength of 550 nm and the high transmission fiber, 7 beams of laser are acquired through precision optical beam splitting mechanism. The length of each fiber is 4 m, which can be stretched to different workbench and used as the point light source. Thus, one multi-beam fiber laser power can supply 7 Michelson interferometers' operation. The output terminal of the fiber can be fixed on the left of the interferometer, so that the position of the laser source and the interferometer is relatively fixed.

[Experimental contents]

To adjust and measure the instruments before you are familiar with the structure, function, and reading approach of interferometer.

1. Adjustment of Michelson interferometer

(1) Adjusting the three screws of the interferometer base to keep the interferometer horizontal. Then, turnning on the laser power and adjusting the laser beam to be basically vertical to M_1.

(2) Taking off the observation screen, and you can see two sets of light points through the beam-splitting board. Adjusting the screws behind M_1 and M_2 to let the two brightest light points overlap, in which the mirror M_1 and M_2 are roughly perpendicular to each other. (Note: Please adjust the screws behind M_1 and M_2 evenly to avoid too tight or too loose!)

(3) Interference fringes can be observed when the observation screen is installed. Please carefully adjust the screws behind M_1 and M_2 to make M_1 strictly perpendicular to M_2. Then, the horizontal and vertical fine-tuning screws are adjusted to make the interference ring center move to the appropriate position, and the fringe changes are observed by rotating the fine-tuning handwheel.

2. Measurement of the wavelength of He-Ne laser

Firstly, the fine-tuning handwheel is turned slowly to make the M_2 move back and force, and the phenomenon that the stripes "pop out" or "sink" one by one can be observed. Please practice repeatedly, pay attention to the deadpath error and start to measure the data when manipulating the instruments skillfully. Secondly, the initial data d_0 is recorded and the fine-tuning handwheel is turned. Then, the data d_i is recorded once the stripes "pop out" or "sink" 100 times, and the procedure is repeated 9 times to record 9 values of d_i. Finally, the changes of stripes in thickness and density are recorded.

3. Observation of the interference of white light (optional)

Based on the observation of the equal inclination interference, the stripes can be widened by moving M_2. When only 1-2 circular stripes appear on the screen, the fine-tuning handwheel is carefully adjusted until the stripes disappear. At this moment, the light source is replaced with a white light, and the colorful interference stripes can be seen if you look at G_1 (if not, you can turn the fine-tuning handwheel slightly). Then, the fine-tuning handwheel is turned, and the two values of d_1 and d_2 are recorded, which are corresponding to the location of the appearance and the disappearance of colorful stripes, respectively (It can be measured several times repeatedly). Finally, according to formula (31-6), (31-7), and $\Delta d = |d_2 - d_1|$, the coherence length and coherence time of white light are calculated.

4. Observation of the interference of sodium light, and measurement of the coherent length of

sodium light (optional)

Firstly, the white light source is removed, the sodium lamp is put on, and the beam splitter G_1 is observed with eyes. While mirror M_2 is moved, interference fringes will become worse/better with the change of d values. Then, M_2 is moved continuously until the interference stripes can't be seen clearly. Finally, the movement distance of M_2 (Δd) is recorded, and the coherent length color of sodium yellow light is calculated according to formula $\Delta L=2\Delta d$.

[Data processing and analysis]

1. Recording the data d_0, d_1, … d_9 in a table, dividing them into two groups, and using the successive differential method to get the average value of Δd.

2. Calculating the value of λ according to $\Delta d=N\lambda/2$, then comparing with the standard value (λ_0=632.8 nm) to calculate the percentage error.

[Points for attention]

1. Michelson interferometer is a precision optical instrument, and all optical components can not be touched by hand.

2. It should be slowly adjusted for the three screws behind M_1 and M_2 and two fine-tuning screws with tension spring under the mirror seat of M_1.

3. It is forbidden to watch the laser directly to avoid damaging the eyes.

4. Optical fiber is a light transmission medium, which can not be folded by hand.

5. It is a normal phenomenon that the output of each fiber ususlly changes in intensity due to that the energy distribution of laser beam light is a typical Gaussian distribution.

6. Do not leave your seat at will and walk back and forth, so as to avoid causing vibration to influence other students.

[Preview questions]

1. To explain the function of of each optical element according to the optical path of Michelson interferometer.

2. What is the non-localized interference? To sketch the conditions and steps of adjustment of non-localized interference fringes.

[Discussion questions]

1. To summarize the main points and rules of Michelson interferometer regulation based on the phenomena in the experiment.

2. The interference fringes of Michelson interferometer and Newton ring are both circular stripes, what is the difference between them?

Lab 32 Diffraction Grating

Diffraction grating is a kind of important spectroscopic element which is made according to the principle of multi slit diffraction and decomposes polychromatic light into spectrum. It can produce uniform spectrum with large brightness and wide spacing. Grating is not only suitable for visible light wave, but also for infrared and ultraviolet light wave. It is often used to accurately determine the wavelength of light wave and carry out spectral analysis. Spectrograph and monochromator with diffraction grating as dispersive element are one of the basic instruments for material spectrum analysis. The principle of grating diffraction is also the basis of the analysis of crystal X-ray results, modern spectrum analysis and optical information processing.

【Purpose】

1. Observe the diffraction spectrum of grating and understand the basic law of grating diffraction.

2. Be familiar with the adjustment and use of spectrometer.

3. Learn to measure grating constant, dispersion and some characteristic wavelengths of mercury atom spectrum.

【Theory】

1. Diffraction grating and grating constant

The grating is composed of a large number of closely arranged and uniform parallel slits (or notches), and its schematic diagram is shown in Fig. 32-1. The original grating

is carved on the refined parallel plane optical glass with a diamond cutter. At the notch, the light shines on it and scatters everywhere. The two notches are equivalent to a transparent slit. The grating made by this method is very precise, difficult to make and expensive. Replication grating and holographic grating are commonly used. The holographic grating used in this experiment is made on photosensitive glass by laser holography.

In figure 32-1, a is the grating notch (opaque) width and b is the transparent slit width. d = a + b is the distance between corresponding two points on two adjacent slits, which is called grating constant. It is one of the basic parameters of grating.

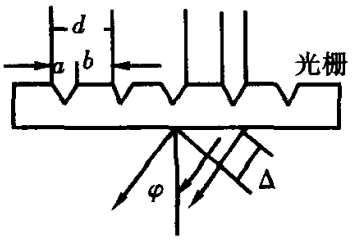

Fig.32—1 Schematic diagram of grating

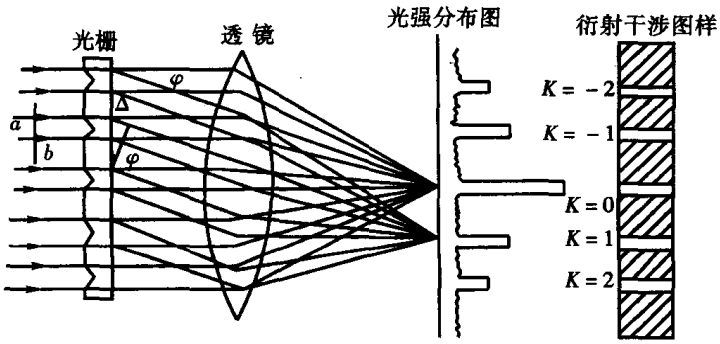

Fig.32—2 Schematic diagram of grating diffraction

2. Grating equation and grating spectrum

According to Fraunhofer diffraction theory, when the wavelength is λ When the parallel beam is vertically projected onto the grating plane, the light wave will diffract at each slit, and the diffraction of all slits will interfere with each other. The interference fringes are localized at infinity. If a focusing lens is used behind the grating, the diffracted light in all directions will focus on its focal plane, so as to obtain the interference fringes of diffracted light, as shown in Fig. 32-2.

According to Fig. 32-1, the optical path difference of the light beam emitted from the corresponding points of two adjacent slots is:

$$\Delta = (a+b)\sin\varphi = d\sin\varphi$$

Where, the sum $\boldsymbol{d = a + b}$ of the width of the grating slit and the notch is the grating constant. If there are n notches per centimeter on the grating sheet, the grating constant is $\boldsymbol{(a+b) = \frac{1}{n}cm}$. φ Is the diffraction angle.

When the diffraction angle satisfies the grating equation:

$$d\sin\varphi = k\lambda \quad k = 0, \pm 1, \pm 2, \mathrm{L} \qquad (1)$$

the light will be strengthened. Where λ is the wavelength of monochromatic light, and K is the number of bright fringes. After the diffracted light wave converges through the lens, a series of symmetrically distributed bright fringes are formed on the focal plane, as shown in Fig.32-2. The bright stripe with k=0 is called the central stripe or zero order stripe, k= ±1 is the first-order stripe symmetrically distributed on the left and right, k= ±2 is the second-order stripe symmetrically distributed on the left and right, and so on.

If the light source contains several complex colors of different wavelengths, the same order spectral line will have different diffraction Angle φ except zero order. Therefore, spectral lines arranged in wavelength order appear on the focal plane of the lens, which is called grating spectrum. The spectrum composed of spectral lines with the same K value is the same level spectrum, So there are primary spectrum, secondary spectrum. There are four characteristic spectral lines in each order of the diffraction spectrum of low-pressure mercury lamp: purple $\lambda_1 = 435.8nm$, green $\lambda_2 = 546.1nm$, yellow $\lambda_3 = 577.0nm$ and $\lambda_4 = 579.1nm$.

3. angular dispersion

From the grating equation, we know that the diffraction Angle φ is a function of wavelength, which is the role dispersion of grating. The dispersion rate of diffraction grating is defined as：

$$D = \frac{\Delta\varphi}{\Delta\lambda}$$

The above formula shows that the dispersion rate of grating is the ratio of the difference of diffraction Angle $\Delta\varphi$ of two spectral lines at the same level to the difference of wavelength $\Delta\lambda$ of these two spectral lines. By differentiating the grating equation, D can be expressed as:

$$D = \frac{k}{d\cos\phi}(rad/\overset{0}{A}) \qquad (2)$$

It can be seen from the above formula that the grating spectrum has the following characteristics: the smaller the grating constant D (i.e. the more grating scribed lines per millimeter), the greater the role dispersion; The spectrum of higher number has greater dispersion than that of lower number; When diffraction angle φ Very small, $\cos\varphi \approx 1$ in equation (2), and the dispersion rate D can be regarded as a constant $\Delta\varphi$ and $\Delta\lambda$ is proportional, so the grating spectrum is called uniform spectrum.

4. Measurement of grating constant and characteristic spectral line wavelength of mercury lamp

According to equation (1), if the wavelength value of a spectral line of incident light at a certain level is known, and the diffraction angle φ of the spectral line is measured， The grating constant D of the grating used can be obtained. On the contrary, if the grating constant of the grating used is known, the wavelength of each characteristic spectral line emitted by the light source can be measured by equation (1).The angle φ can be measured by spectrometer.

【Experimental instruments】

Spectrometer, grating, mercury lamp, plane mirror, etc.

【Experiment content】

1. Adjustment of spectrometer and observation of mercury lamp diffraction

spectrum

(1) Carefully adjust the spectrometer according to the requirements described in experiment 20. That is, the telescope is required to focus at infinity, and its optical axis is perpendicular to the central axis of the spectrometer; The collimator produces parallel light, and its optical axis is perpendicular to the central axis of the spectrometer.

(2) Adjust the grating so that the incident light is perpendicular to the grating plane and its plane is parallel to the central axis of the spectrometer. The method is as follows: Illuminate the slit of the collimator so that the black cross vertical line of the telescope coincides with the slit image, and then place the grating on the stage of the spectrometer as shown in figure 32-3. The grating plane shall be vertically bisected with the connecting line of the two screws under the stage. Use a small lamp to illuminate the Green Cross window of the telescope, and the bright cross reflected by the grating shall appear on the reticle. Select a leveling screw a_1 or a_2 under the stage to make the bright cross coincide with the cross line above the reticle (do not move the telescope for this purpose, and the grating does not need to rotate 180 °). At this time, the image shown in figure 32-4 can be seen through the telescope, and the optical axis of the collimator coaxial with the telescope is naturally perpendicular to the grating plane.

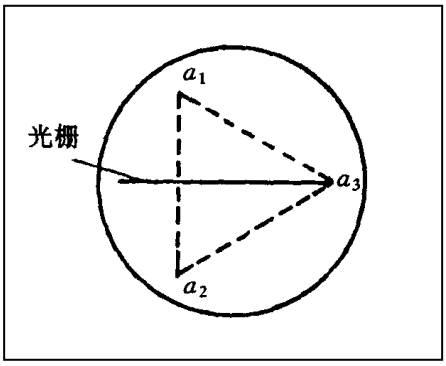

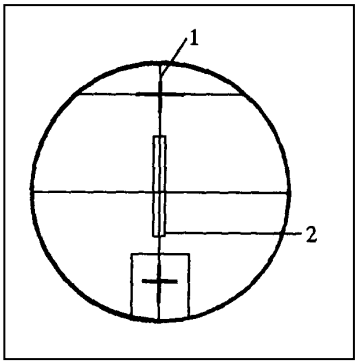

Fig.32-3 Position of grating on small platform

Fig 32-4 1. Cross reflection image 2. Slit image

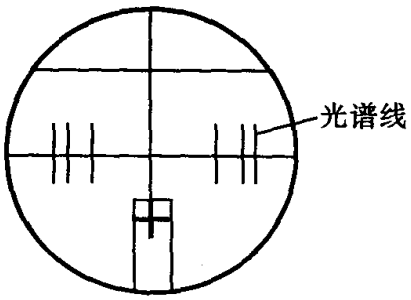

Fig 32－5 Contour of spectral line

(3) Adjust the grating so that its notch is parallel to the central axis of the spectrometer

Rotate the telescope to observe the diffraction spectrum of the mercury lamp. The zero order of the center (k = 0) is white. When the telescope turns to the left and right sides, four separate color spectral lines can be seen. The height of each spectral line shall be evenly divided by the horizontal guide line passing through the center of the dividing plate. Otherwise, the leveling screw a_3 in Fig. 32-3 must be adjusted to correct the inclination of the grating trace line until each spectral line is equal in height, as shown in Fig. 32-5. However, it should be noted that the parallelism between the grating plane and the central axis of the spectrometer may be affected after adjusting a_3. Therefore, recheck the cross coincidence in the previous step with a telescope until both conditions are met.

(4) Adjust the slit width of the collimator. The slit width shall be subject to the ability to distinguish two adjacent yellow spectral lines.

Note: after the grating is adjusted, the vernier disc (together with the stage) should be fixed. During measurement, only the telescope (together with the dial) can be rotated without rotating or touching the grating.

2. Measurement of grating constant and light wavelength

(1) The wavelength $\lambda = 546.1nm$ of the green spectral line of the mercury lamp is known. The diffraction angle of the first order (k=1) spectrum is measured φ. In order to eliminate the eccentricity of the spectrometer, read the readings of the left and right

cursors of the spectrometer at the same time. When k =+1, write down θ_1 and θ_2; For k =-1, write down θ_1'、θ_2'. Then the measured φ is:

$$\varphi = \frac{|\theta_1' - \theta_1| + |\theta_2' - \theta_2|}{4}$$

The measurement was repeated four times.

Note that the difference between the diffraction angles of + 1 and - 1 should not exceed a few minutes, otherwise it should be rechecked whether the optical axis of the collimator is perpendicular to the grating plane.

(2) With the grating constant calculated from the measurement of the green spectral line as known, the φ angles of the purple and yellow chromatographic lines were measured respectively according to the above steps, repeated four times.

3. Measure $\Delta\varphi$ and $\Delta\lambda$ from the two yellow lines of the mercury spectrum to obtain the dispersion rate D of the grating.

【Data processing and analysis】

1. All data shall be recorded in the list, and the form shall be self drawn.
2. The grating constant D and its uncertainty are calculated.
3. Calculate φ_{purple}、$\varphi_{yellow1}$、$\varphi_{yellow2}$ respectively. Calculate λ_{purple}、$\lambda_{yellow1}$、$\lambda_{yellow2}$ respectively according to formula $\frac{\sin\varphi_1}{\sin\varphi_2} = \frac{\lambda_1}{\lambda_2}$, and compare them with their standard values to calculate the relative error.
4. Calculate the dispersion rate D.

【matters needing attention】

1. The spectrometer shall be used correctly according to the operating procedures.

2. Fingers shall not touch the surface of holographic grating (the side coated with photosensitive adhesive). To move the holographic grating, you must hold the metal

base in your hand.

3. Do not use the mercury lamp directly lit by your eyes to avoid the influence of ultraviolet rays on your eyes.

Preview thinking questions

1. The physical meaning and applicable conditions of each quantity in the expression of grating equation and dispersion rate.。

2. If the spectral line observed in the telescope is tilted, how should it be adjusted? What should we pay attention to when adjusting?

Discussion questions

1. Theoretically, which level of wavelength measurement value should be taken with the smallest relative error?

2. When using sodium light（λ=589.3nm）is vertically incident on a plane transmission grating with 500 notches per millimeter, what level of spectrum can be seen at most?

45 Characteristic measurement and application of integrated circuit temperature sensor

With the development of science and technology, a variety of new integrated circuit temperature sensors are emerging. This kind of integrated circuit temperature sensor has the following advantages: (1) the output changes linearly with the temperature (2) no reference point is required (3) strong anti-interference ability (4) good interchangeability and easy to use. Therefore, this kind of sensor has been widely used in scientific research, industry and household appliances for accurate temperature measurement and control.

1、Experimental purpose

1）Measure the relationship between output current and temperature of AD590 integrated circuit temperature sensor, and be familiar with the basic characteristics of the sensor.

2) Assemble a 0-50℃digital thermometer with the unbalanced bridge method.

2、Experiment principle

AD590 integrated circuit temperature sensor is composed of multiple transistors and resistors with the same parameters. When a certain DC working voltage (4.5-20V) is applied to the two terminals of the device, the output current and temperature meet the following relationship:

$$I = B\theta + A$$

where I is the output current, the unit of I is μA, θ is the Celsius temperature, B is the slope. Generally, $B = {}^{1\mu A}\!/_{^{0}C}$, namely, if the temperature of the temperature sensor increases or decreases by 1°C, the output current of the sensor increases or decreases by 1 μA. Using the above characteristics of the AD590 integrated circuit temperature sensor, thermometers for various purposes can be made. A digital Celsius thermometer can be made with an unbalanced bridge circuit, that is, the digital voltage display value is "0" when the AD90 device is at 0°C, and the digital voltmeter display value is "θ" when the AD590 device is at θ°C.

3、Instruments introduction

1) AD590 current-type integrated temperature sensor

AD590 is a two-terminal integrated circuit temperature sensor with two pins. As shown in Figure 1, number 1 and 2 are connected to the positive and negative electrode of the power, respectively. In addition, number 3 is connected to ground, or sometimes it is not necessary. Generally, the working voltage of AD590 is 10～15V, but it cannot be less than 4V.

2) The range of the PZ114 type DC digital voltmeter have 0～200mV, 0～2V and 0～20V etc. The advantage of this instrument is that it can automatically switch the range according to the input signal. It is quite convenient to adjust the bridge balance in the experiment.

3) Other equipment will also be used includes beaker, heater, ZX21 resistance box, vacuum thermos (with plastic liner protection), stirrer, 0～50℃ mercury thermometer, test tube, PT100 temperature sensor, switch, wire, etc.

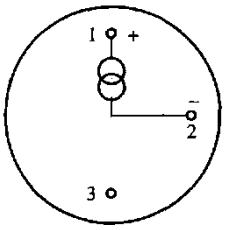

Figure 1 AD590 Pin

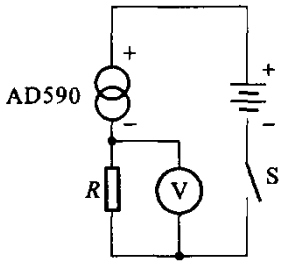

Figure 2 The circuit diagram of AD590 characteristic measurement

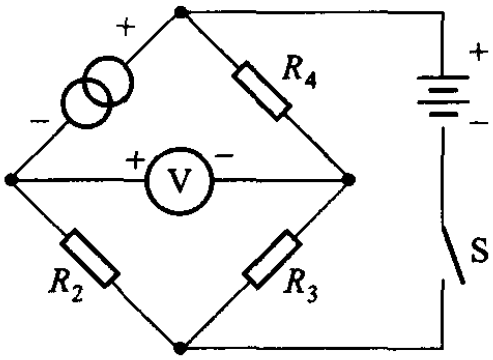

Figure 3 Wiring diagram of digital centigrade thermometer

4、 Experimental contents and steps

Connect the lines according to figure 2. Note that the positive and negative poles of AD590 cannot be wrongly connected. The value of the sampling resistance R is 1000

Ω.

1. Measure the relationship between current and temperature of AD590 integrated circuit temperature sensor. The slope B, intercept A and correlation coefficient r were calculated by fitting the experimental data with the least square method. AD590 temperature sensor is led out by two terminal copper wires. In order to prevent short circuit between poles, two copper wires should not be placed directly in water. We should use a thin glass tube with one end closed to protect the poles. A small amount of transformer oil is injected into the tube to ensure good heat transfer. (How to ensure that the AD590 integrated temperature sensor and mercury thermometer are at the same temperature during the experiment?)

2. Assemble a digital thermometer with the range of 0 ~ 50 ℃. Connect AD590, three resistance boxes, DC regulated power supply and digital voltmeter according to figure 3. Put AD590 into the freezing point tank. The values of R_3 and R_2 are set to 1000 Ω. Adjust the value of R_4 so that the digital voltage to zero at 0^0C. Then put AD590 into water at other temperatures and compare with standard mercury thermometer to find out the percent difference.

3. Change the power voltage in Figure 3, such as changing from 8V to 10V, and observe whether the output current of AD590 sensor changes? Analyze the reasons.

Discussion

1. What are the characteristics of current-type integrated circuit temperature sensor? Compared with semiconductor thermistor and thermocouple, what advantages does it have?

2. If the sensitivity of AD590 is not $1.000\mu A/^0 C$, please consider how to change the value of R_2 to reduce the measurement error of digital thermometer.

实验 14 三线摆		
序号	英文	中文
1	Trilinear pendulum	三线摆
2	The moment of inertia	转动惯量
3	Parallel axis theorem	平行轴定理

实验 21　声速		
序号	英文	中文
1	acoustic speed	声速
2	sonar	声纳
3	ultrasonic	超声的
4	piezoelectric ceramic transducer	压电陶瓷转换器
5	standing wave	驻波
6	receiver	接收器
7	transmitter	发射器

实验 26 霍尔效应　实习 1 霍尔效应测量通电螺线管内部磁场		
序号	英文	中文
1	Hall Effect	霍尔效应
2	charged solenoid	通电螺线管
3	Biot-Savart's law	毕奥-萨伐尔定律
4	field current	励磁电流
5	the Hall potential difference	霍尔电势差

实验 31 麦克孙干涉仪		
序号	英文	中文
1	Michelson interferometer	麦克孙干涉仪
2	light source	光源
3	monochromatic light	单色光
4	beam splitter	分束镜
5	mirror	镜子
6	optical path difference	光程差

实验 32 衍射光栅		
1	spectrometer	分光计
2	monochromatic light	单色光
3	prism	三棱镜
4	mercury lamp	汞灯
5	Plane mirror	平面镜
6	telescope	望远镜
7	grating	光栅
8	grating equation	光栅方程

实验 45 AD590		
序号	英文	中文
1	Integrated circuit	集成电路
2	Temperature sensor	温度传感器
3	Anti-interference ability	抗干扰能力
4	thermometer	温度计
5	Linearly	线性地
6	reference point	参考点
7	Heater	加热器
8		