1. $F=\overline{AB+\overline{A}C+\overline{B}D}$, write the inverse function $\overline{F}$ and dual function F^* by **inversion rule** and **duality rule** respectively.

2. Simplify the logic function expression into the simplest AND-OR expression by **algebra method**.

$$F=A+\overline{\overline{B}+\overline{CD}}+\overline{\overline{AD}\overline{B}}$$

3. Simplify the logic function expression into the simplest NAND-NAND expression by **Karnaugh map** method.

$F(A,B,C,D)=\sum m$（0,2,5,9,15）$+\sum d$（6,7,8,10,12,13）

4. Set the initial state of Q1 and Q2 to zero, try to write out the output of Q1and Q2 and draw the correct waveform.

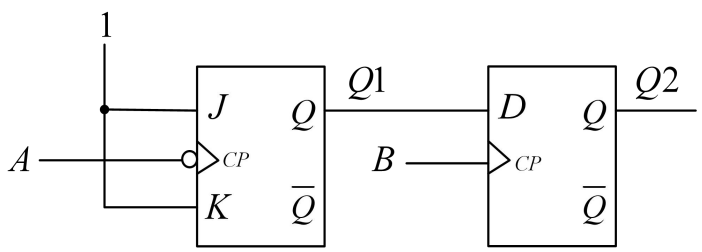

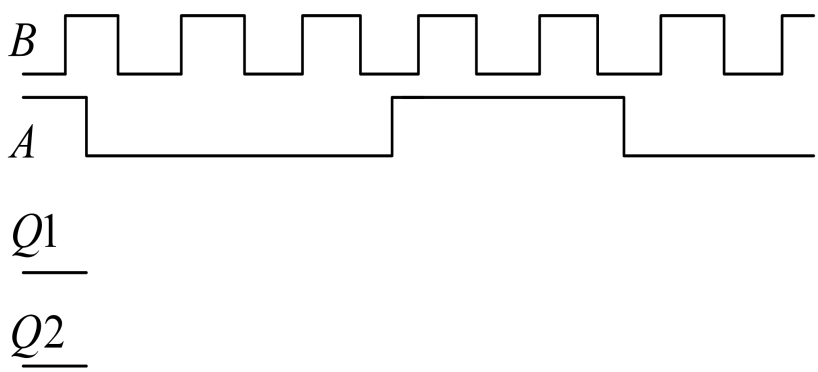

5. Write the expression of the output functions of the combinational circuit , list the **truth table**, and analyze the logic function.

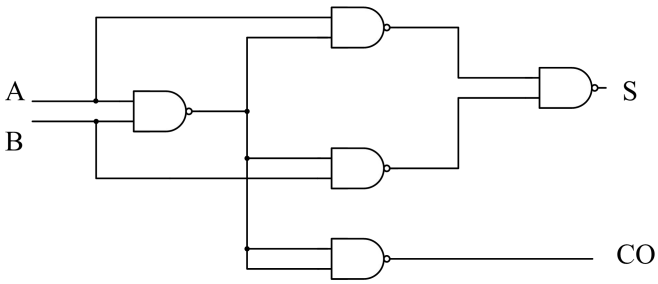

6. Analyze the modulus value of the counter circuit .

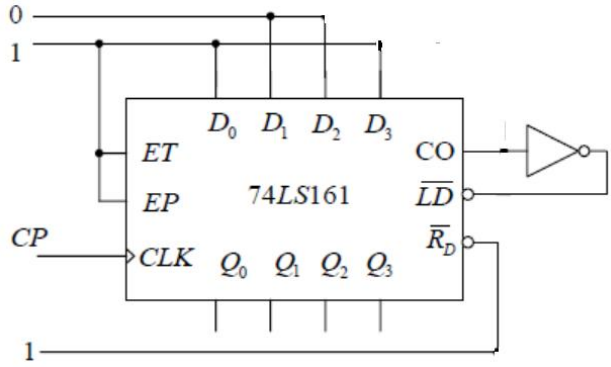

7. Analyze the sequential logic circuit shown in the following figure, write out the **driving equation**, **state equation**, **output equation**, **state transition table** and **diagram of state transition**, and **explain the function of the circuit**.

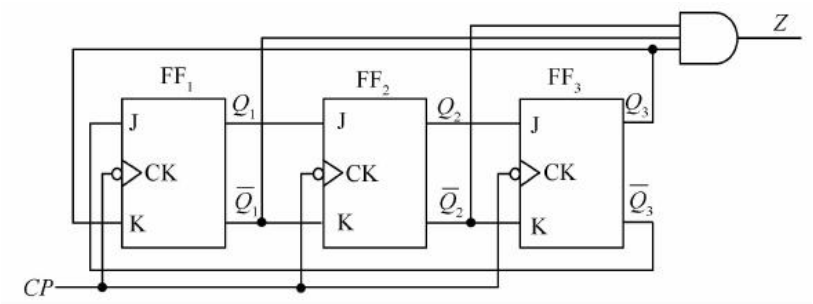

8. Design a logic circuit for monitoring the working state of traffic lights. Each group of signal lamps consists of three lamps: red, yellow and green (R, Y, G). Under **normal circumstance**, only one lamp lights up at any time. **Black means bright**, white means not bright. When the other five states shown in the figure occur, a fault signal (**Z=1**) is required. The circuit is realized by using **1-of-4 data selector** 74HC153 and **Not Gate** .

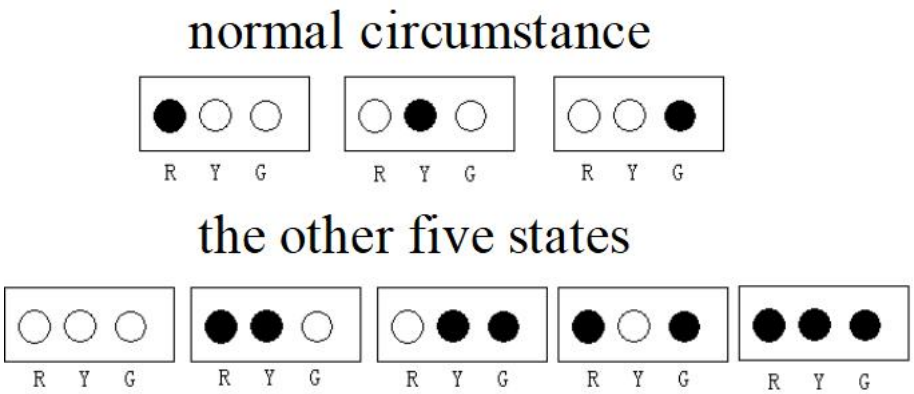

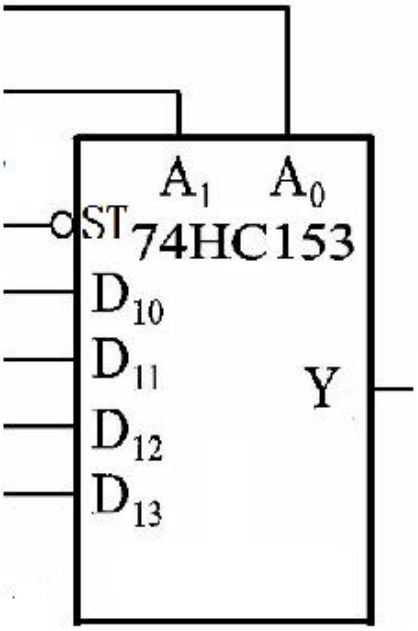
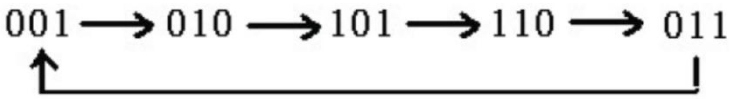
9. Use **D flip-flop** , **AND Gate** and **OR Gate** to realize a synchronous counter with conversion relationship as shown in the figure.