Chapter 3

Arithmetic for Computers

Arithmetic for Computers

- Operations on integers
  - Addition and subtraction
  - Multiplication and division
  - Dealing with overflow
- Floating-point real numbers
  - Representation and operations

Integer Addition

- Example: 7 + 6

		(0)		(0)		(1)		(1)		(0)		(Carries)
. . .		0		0		0		1		1		1
. . .		0		0		0		1		1		0
. . .	(0)	0	(0)	0	(0)	1	(1)	1	(1)	0	(0)	1

  - Overflow if result out of range
    - Adding +ve and –ve operands, no overflow
    - Adding two +ve operands
      - Overflow if result sign is 1
    - Adding two –ve operands
      - Overflow if result sign is 0

Integer Subtraction

- Add negation of second operand
- Example: 7 – 6 = 7 + (–6)

+7:	0000 0000 … 0000 0111
–6:	1111 1111 … 1111 1010
+1:	0000 0000 … 0000 0001

- Overflow if result out of range
  - Subtracting two +ve or two –ve operands, no overflow
  - Subtracting +ve from –ve operand
    - Overflow if result sign is 0
  - Subtracting –ve from +ve operand
    - Overflow if result sign is 1

Dealing with Overflow

- Some languages (e.g., C) ignore overflow
  - Use MIPS `addu`, `addui`, `subu` instructions
- Other languages (e.g., Ada, Fortran) require raising an exception
  - Use MIPS `add`, `addi`, `sub` instructions
  - On overflow, invoke exception handler
    - Save PC in exception program counter (EPC) register
    - Jump to predefined handler address
    - `mfc0` (move from coprocessor reg) instruction can retrieve EPC value, to return after corrective action

ADD/ADDU

Add Word **ADD**

31–26	25–21	20–16	15–11	10–6	5–0
SPECIAL 000000	rs	rt	rd	0 00000	ADD 100000
6	5	5	5	5	6

Format: `ADD rd, rs, rt` **MIPS32**

Purpose:

To add 32-bit integers. If an overflow occurs, then trap.

Description: `rd ← rs + rt`

The 32-bit word value in GPR *rt* is added to the 32-bit value in GPR *rs* to produce a 32-bit result.

- If the addition results in 32-bit 2's complement arithmetic overflow, the destination register is not modified and an Integer Overflow exception occurs.
- If the addition does not overflow, the 32-bit result is placed into GPR *rd*.

ADD/ADDU

31–26	25–21	20–16	15–11	10–6	5–0
SPECIAL 000000	rs	rt	rd	0 00000	ADD 100000
6	5	5	5	5	6

Format: `ADD rd, rs, rt` **MIPS32**

Purpose:

To add 32-bit integers. If an overflow occurs, then trap.

Description: `rd ← rs + rt`

Operation:

```
temp ← (GPR[rs]31||GPR[rs]31..0) + (GPR[rt]31||GPR[rt]31..0)
if temp32 ≠ temp31 then
    SignalException(IntegerOverflow)
else
    GPR[rd] ← temp
endif
```

Exceptions:

Integer Overflow

Programming Notes:

ADDU performs the same arithmetic operation but does not trap on overflow.

MORGAN KAUFMANN

ADD/ADDU

Add Unsigned Word **ADDU**

31–26	25–21	20–16	15–11	10–6	5–0
SPECIAL 000000	rs	rt	rd	0 00000	ADDU 100001
6	5	5	5	5	6

Format: `ADDU rd, rs, rt` **MIPS32**

Purpose:

To add 32-bit integers

Description: `rd ← rs + rt`

The 32-bit word value in GPR *rt* is added to the 32-bit value in GPR *rs* and the 32-bit arithmetic result is placed into GPR *rd*.

No Integer Overflow exception occurs under any circumstances.

Restrictions:

None

ADD/ADDU

Add Unsigned Word **ADDU**

31–26	25–21	20–16	15–11	10–6	5–0
SPECIAL 000000	rs	rt	rd	0 00000	ADDU 100001
6	5	5	5	5	6

Format: `ADDU rd, rs, rt` **MIPS32**

Operation:

```
temp ← GPR[rs] + GPR[rt]
GPR[rd] ← temp
```

Exceptions:

None

Programming Notes:

The term "unsigned" in the instruction name is a misnomer; this operation is 32-bit modulo arithmetic that does not trap on overflow. This instruction is appropriate for unsigned arithmetic, such as address arithmetic, or integer arithmetic environments that ignore overflow, such as C language arithmetic.

SUB/SUBU

Subtract Word **SUB**

31–26	25–21	20–16	15–11	10–6	5–0
SPECIAL 000000	rs	rt	rd	0 00000	SUB 100010
6	5	5	5	5	6

Format: `SUB rd, rs, rt` **MIPS32**

Purpose:

To subtract 32-bit integers. If overflow occurs, then trap

Description: `rd ← rs - rt`

The 32-bit word value in GPR *rt* is subtracted from the 32-bit value in GPR *rs* to produce a 32-bit result. If the subtraction results in 32-bit 2's complement arithmetic overflow, then the destination register is not modified and an Integer Overflow exception occurs. If it does not overflow, the 32-bit result is placed into GPR *rd*.

Operation:

```
temp ← (GPR[rs]31||GPR[rs]31..0) − (GPR[rt]31||GPR[rt]31..0)
if temp32 ≠ temp31 then
    SignalException(IntegerOverflow)
else
    GPR[rd] ← temp31..0
endif
```

SUB/SUBU

Subtract Unsigned Word **SUBU**

31–26	25–21	20–16	15–11	10–6	5–0
SPECIAL 000000	rs	rt	rd	0 00000	SUBU 100011
6	5	5	5	5	6

Format: `SUBU rd, rs, rt` **MIPS32**

Purpose:

To subtract 32-bit integers

Description: `rd ← rs - rt`

The 32-bit word value in GPR *rt* is subtracted from the 32-bit value in GPR *rs* and the 32-bit arithmetic result is and placed into GPR *rd*.

No integer overflow exception occurs under any circumstances.

Operation:

```
temp    ← GPR[rs] - GPR[rt]
GPR[rd]← temp
```

MK MORGAN KAUFMANN

AND

And **AND**

31–26	25–21	20–16	15–11	10–6	5–0
SPECIAL 000000	rs	rt	rd	0 00000	AND 100100
6	5	5	5	5	6

Format: `AND rd, rs, rt` **MIPS32**

Purpose:

To do a bitwise logical AND

Description: `rd ← rs AND rt`

The contents of GPR *rs* are combined with the contents of GPR *rt* in a bitwise logical AND operation. The result is placed into GPR *rd*.

Restrictions:

None

Operation:

```
GPR[rd] ← GPR[rs] and GPR[rt]
```

ANDI

And Immediate **ANDI**

31–26	25–21	20–16	15–0
ANDI 001100	rs	rt	immediate
6	5	5	16

Format: `ANDI rt, rs, immediate` **MIPS32**

Purpose:

To do a bitwise logical AND with a constant

Description: `rt ← rs AND immediate`

The 16-bit *immediate* is zero-extended to the left and combined with the contents of GPR *rs* in a bitwise logical AND operation. The result is placed into GPR *rt*.

Restrictions:

None

Operation:

```
GPR[rt] ← GPR[rs] and zero_extend(immediate)
```

OR

Or **OR**

31–26	25–21	20–16	15–11	10–6	5–0
SPECIAL 000000	rs	rt	rd	0 00000	OR 100101
6	5	5	5	5	6

Format: `OR rd, rs, rt` **MIPS32**

Purpose:

To do a bitwise logical OR

Description: `rd ← rs or rt`

The contents of GPR *rs* are combined with the contents of GPR *rt* in a bitwise logical OR operation. The result is placed into GPR *rd*.

Restrictions:

None

Operation:

```
GPR[rd] ← GPR[rs] or GPR[rt]
```

ORI

Or Immediate **ORI**

31–26	25–21	20–16	15–0
ORI 001101	rs	rt	immediate
6	5	5	16

Format: `ORI rt, rs, immediate` **MIPS32**

Purpose:

To do a bitwise logical OR with a constant

Description: `rt ← rs or immediate`

The 16-bit *immediate* is zero-extended to the left and combined with the contents of GPR *rs* in a bitwise logical OR operation. The result is placed into GPR *rt*.

Restrictions:

None

Operation:

```
GPR[rt] ← GPR[rs] or zero_extend(immediate)
```

NOR

Not Or **NOR**

31–26	25–21	20–16	15–11	10–6	5–0
SPECIAL 000000	rs	rt	rd	0 00000	NOR 100111
6	5	5	5	5	6

Format: `NOR rd, rs, rt` **MIPS32**

Purpose:

To do a bitwise logical NOT OR

Description: `rd ← rs NOR rt`

The contents of GPR *rs* are combined with the contents of GPR *rt* in a bitwise logical NOR operation. The result is placed into GPR *rd*.

Restrictions:

None

Operation:

```
GPR[rd] ← GPR[rs] nor GPR[rt]
```

XOR

Exclusive OR **XOR**

31–26	25–21	20–16	15–11	10–6	5–0
SPECIAL 000000	rs	rt	rd	0 00000	XOR 100110
6	5	5	5	5	6

Format: `XOR rd, rs, rt` **MIPS32**

Purpose:

To do a bitwise logical Exclusive OR

Description: `rd ← rs XOR rt`

Combine the contents of GPR *rs* and GPR *rt* in a bitwise logical Exclusive OR operation and place the result into GPR *rd*.

Restrictions:

None

Operation:

```
GPR[rd] ← GPR[rs] xor GPR[rt]
```

XORI

Exclusive OR Immediate **XORI**

31–26	25–21	20–16	15–0
XORI 001110	rs	rt	immediate
6	5	5	16

Format: `XORI rt, rs, immediate` **MIPS32**

Purpose:

To do a bitwise logical Exclusive OR with a constant

Description: `rt ← rs XOR immediate`

Combine the contents of GPR *rs* and the 16-bit zero-extended *immediate* in a bitwise logical Exclusive OR operation and place the result into GPR *rt*.

Restrictions:

None

Operation:

```
GPR[rt] ← GPR[rs] xor zero_extend(immediate)
```

SLT

Set on Less Than **SLT**

31–26	25–21	20–16	15–11	10–6	5–0
SPECIAL 000000	rs	rt	rd	0 00000	SLT 101010
6	5	5	5	5	6

Format: `SLT rd, rs, rt` **MIPS32**

Purpose:

To record the result of a less-than comparison

Description: `rd ← (rs < rt)`

Compare the contents of GPR *rs* and GPR *rt* as signed integers and record the Boolean result of the comparison in GPR *rd*. If GPR *rs* is less than GPR *rt*, the result is 1 (true); otherwise, it is 0 (false).

The arithmetic comparison does not cause an Integer Overflow exception.

Operation:

```
if GPR[rs] < GPR[rt] then
    GPR[rd] ← 0^(GPRLEN-1) || 1
else
    GPR[rd] ← 0^GPRLEN
endif
```

SLTU

Set on Less Than Unsigned **SLTU**

31–26	25–21	20–16	15–11	10–6	5–0
SPECIAL 000000	rs	rt	rd	0 00000	SLTU 101011
6	5	5	5	5	6

Format: `SLTU rd, rs, rt` **MIPS32**

Purpose:

To record the result of an unsigned less-than comparison

Description: `rd ← (rs < rt)`

Compare the contents of GPR *rs* and GPR *rt* as unsigned integers and record the Boolean result of the comparison in GPR *rd*. If GPR *rs* is less than GPR *rt*, the result is 1 (true); otherwise, it is 0 (false).

The arithmetic comparison does not cause an Integer Overflow exception.

Operation:

```
if (0 || GPR[rs]) < (0 || GPR[rt]) then
    GPR[rd] ← 0^(GPRLEN-1) || 1
else
```

SLTI

Set on Less Than Immediate **SLTI**

31–26	25–21	20–16	15–0
SLTI 001010	rs	rt	immediate
6	5	5	16

Format: `SLTI rt, rs, immediate` **MIPS32**

Purpose:

To record the result of a less-than comparison with a constant

Description: `rt ← (rs < immediate)`

Compare the contents of GPR *rs* and the 16-bit signed *immediate* as signed integers and record the Boolean result of the comparison in GPR *rt*. If GPR *rs* is less than *immediate*, the result is 1 (true); otherwise, it is 0 (false).

The arithmetic comparison does not cause an Integer Overflow exception.

Operation:

```
if GPR[rs] < sign_extend(immediate) then
    GPR[rd] ← 0^(GPRLEN-1) || 1
else
    GPR[rd] ← 0^GPRLEN
endif
```

MORGAN KAUFMANN

SLTIU

Set on Less Than Immediate Unsigned **SLTIU**

31–26	25–21	20–16	15–0
SLTIU 001011	rs	rt	immediate
6	5	5	16

Format: `SLTIU rt, rs, immediate` **MIPS32**

Purpose:

To record the result of an unsigned less-than comparison with a constant

Description: `rt ← (rs < immediate)`

Compare the contents of GPR *rs* and the sign-extended 16-bit *immediate* as unsigned integers and record the Boolean result of the comparison in GPR *rt*. If GPR *rs* is less than *immediate*, the result is 1 (true); otherwise, it is 0 (false).

Because the 16-bit *immediate* is sign-extended before comparison, the instruction can represent the smallest or largest unsigned numbers. The representable values are at the minimum [0, 32767] or maximum [max_unsigned-32767, max_unsigned] end of the unsigned range.

The arithmetic comparison does not cause an Integer Overflow exception.

Operation:

```
if (0 || GPR[rs]) < (0 || sign_extend(immediate)) then
    GPR[rd] ← 0^(GPRLEN-1) || 1
else
    GPR[rd] ← 0^GPRLEN
endif
```

MORGAN KAUFMANN

SLL

Shift Word Left Logical **SLL**

31–26	25–21	20–16	15–11	10–6	5–0
SPECIAL 000000	0 00000	rt	rd	sa	SLL 000000
6	5	5	5	5	6

Format: `SLL rd, rt, sa` **MIPS32**

Purpose:

To left-shift a word by a fixed number of bits

Description: `rd ← rt << sa`

The contents of the low-order 32-bit word of GPR *rt* are shifted left, inserting zeros into the emptied bits; the word result is placed in GPR *rd*. The bit-shift amount is specified by *sa*.

SLLV

Shift Word Left Logical Variable **SLLV**

31–26	25–21	20–16	15–11	10–6	5–0
SPECIAL 000000	rs	rt	rd	0 00000	SLLV 000100
6	5	5	5	5	6

Format: `SLLV rd, rt, rs` **MIPS32**

Purpose: To left-shift a word by a variable number of bits

Description: `rd ← rt << rs`

The contents of the low-order 32-bit word of GPR *rt* are shifted left, inserting zeros into the emptied bits; the result word is placed in GPR *rd*. The bit-shift amount is specified by the low-order 5 bits of GPR *rs*.

Restrictions: None

Operation:

```
s       ← GPR[rs]4..0
temp    ← GPR[rt](31-s)..0 || 0^s
GPR[rd]← temp
```

SRL

Shift Word Right Logical **SRL**

31–26	25–21	20–16	15–11	10–6	5–0
SPECIAL 000000	0 00000	rt	rd	sa	SRL 000010
6	5	5	5	5	6

Format: `SRL rd, rt, sa` **MIPS32**

Purpose:

To execute a logical right-shift of a word by a fixed number of bits

Description: `rd ← rt >> sa (logical)`

The contents of the low-order 32-bit word of GPR *rt* are shifted right, inserting zeros into the emptied bits; the word result is placed in GPR *rd*. The bit-shift amount is specified by *sa*.

Restrictions:

None

Operation:

```
s       ← sa
temp    ← 0^s || GPR[rt]31..s
GPR[rd]← temp
```

SRLV

Shift Word Right Logical Variable **SRLV**

31–26	25–21	20–16	15–11	10–6	5–0
SPECIAL 000000	rs	rt	rd	0 00000	SRLV 000110
6	5	5	5	5	6

Format: `SRLV rd, rt, rs` **MIPS32**

Purpose:

To execute a logical right-shift of a word by a variable number of bits

Description: `rd ← rt >> rs (logical)`

The contents of the low-order 32-bit word of GPR *rt* are shifted right, inserting zeros into the emptied bits; the word result is placed in GPR *rd*. The bit-shift amount is specified by the low-order 5 bits of GPR *rs*.

Restrictions:

None

Operation:

```
s      ← GPR[rs]4..0
temp   ← 0s || GPR[rt]31..s
GPR[rd]← temp
```

MORGAN KAUFMANN

SRA

Shift Word Right Arithmetic **SRA**

31–26	25–21	20–16	15–11	10–6	5–0
SPECIAL 000000	0 00000	rt	rd	sa	SRA 000011
6	5	5	5	5	6

Format: `SRA rd, rt, sa` **MIPS32**

Purpose:

To execute an arithmetic right-shift of a word by a fixed number of bits

Description: `rd ← rt >> sa (arithmetic)`

The contents of the low-order 32-bit word of GPR *rt* are shifted right, duplicating the sign-bit (bit 31) in the emptied bits; the word result is placed in GPR *rd*. The bit-shift amount is specified by *sa*.

Restrictions:

None

Operation:

```
s       ← sa
temp    ← (GPR[rt]31)^s || GPR[rt]31..s
GPR[rd]← temp
```

SRAV

Shift Word Right Arithmetic Variable **SRAV**

31–26	25–21	20–16	15–11	10–6	5–0
SPECIAL 000000	rs	rt	rd	0 00000	SRAV 000111
6	5	5	5	5	6

Format: `SRAV rd, rt, rs` **MIPS32**

Purpose:

To execute an arithmetic right-shift of a word by a variable number of bits

Description: `rd ← rt >> rs (arithmetic)`

The contents of the low-order 32-bit word of GPR *rt* are shifted right, duplicating the sign-bit (bit 31) in the emptied bits; the word result is placed in GPR *rd*. The bit-shift amount is specified by the low-order 5 bits of GPR *rs*.

Restrictions:

None

Operation:

```
s      ← GPR[rs]4..0
temp   ← (GPR[rt]31)s || GPR[rt]31..s
GPR[rd]← temp
```

Logical Operation

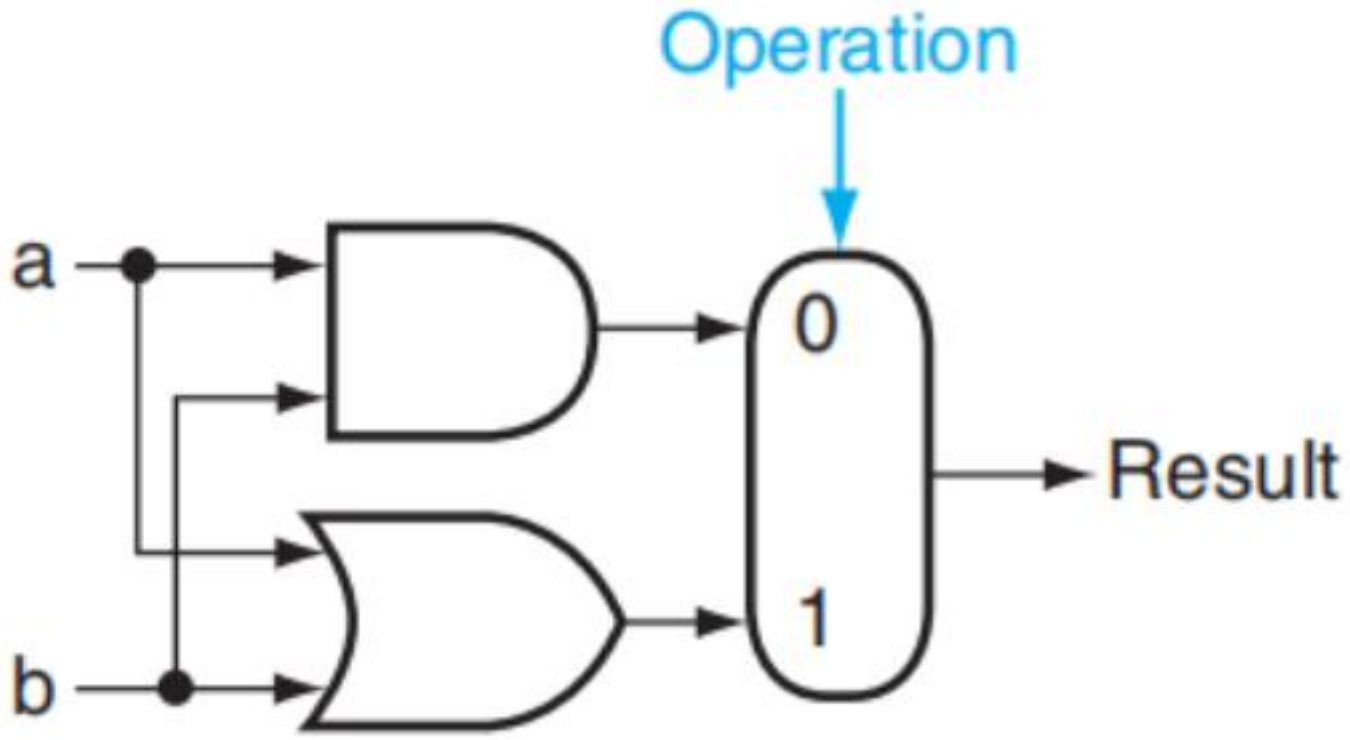

Logical Operation

Arithmetic operation

Inputs			Outputs		Comments
a	b	CarryIn	CarryOut	Sum	
0	0	0	0	0	$0 + 0 + 0 = 00_{two}$
0	0	1	0	1	$0 + 0 + 1 = 01_{two}$
0	1	0	0	1	$0 + 1 + 0 = 01_{two}$
0	1	1	1	0	$0 + 1 + 1 = 10_{two}$
1	0	0	0	1	$1 + 0 + 0 = 01_{two}$
1	0	1	1	0	$1 + 0 + 1 = 10_{two}$
1	1	0	1	0	$1 + 1 + 0 = 10_{two}$
1	1	1	1	1	$1 + 1 + 1 = 11_{two}$

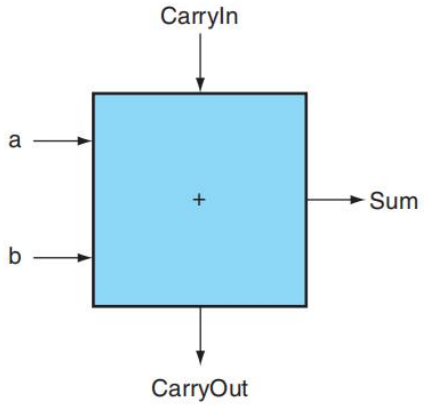

FIGURE B.5.3 Input and output specification for a 1-bit adder.

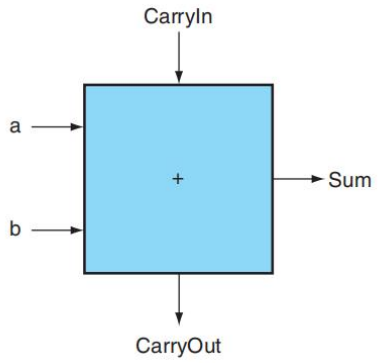

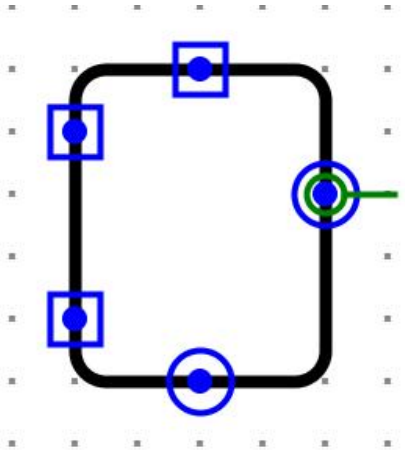

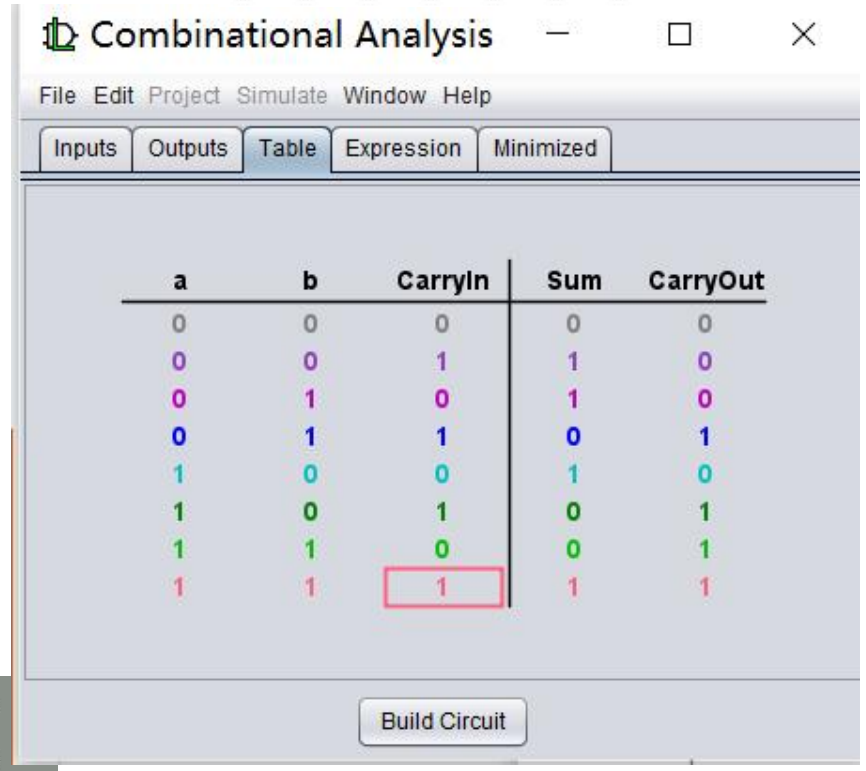

a	b	CarryIn	Sum	CarryOut
0	0	0	0	0
0	0	1	1	0
0	1	0	1	0
0	1	1	0	1
1	0	0	1	0
1	0	1	0	1
1	1	0	0	1
1	1	1	1	1

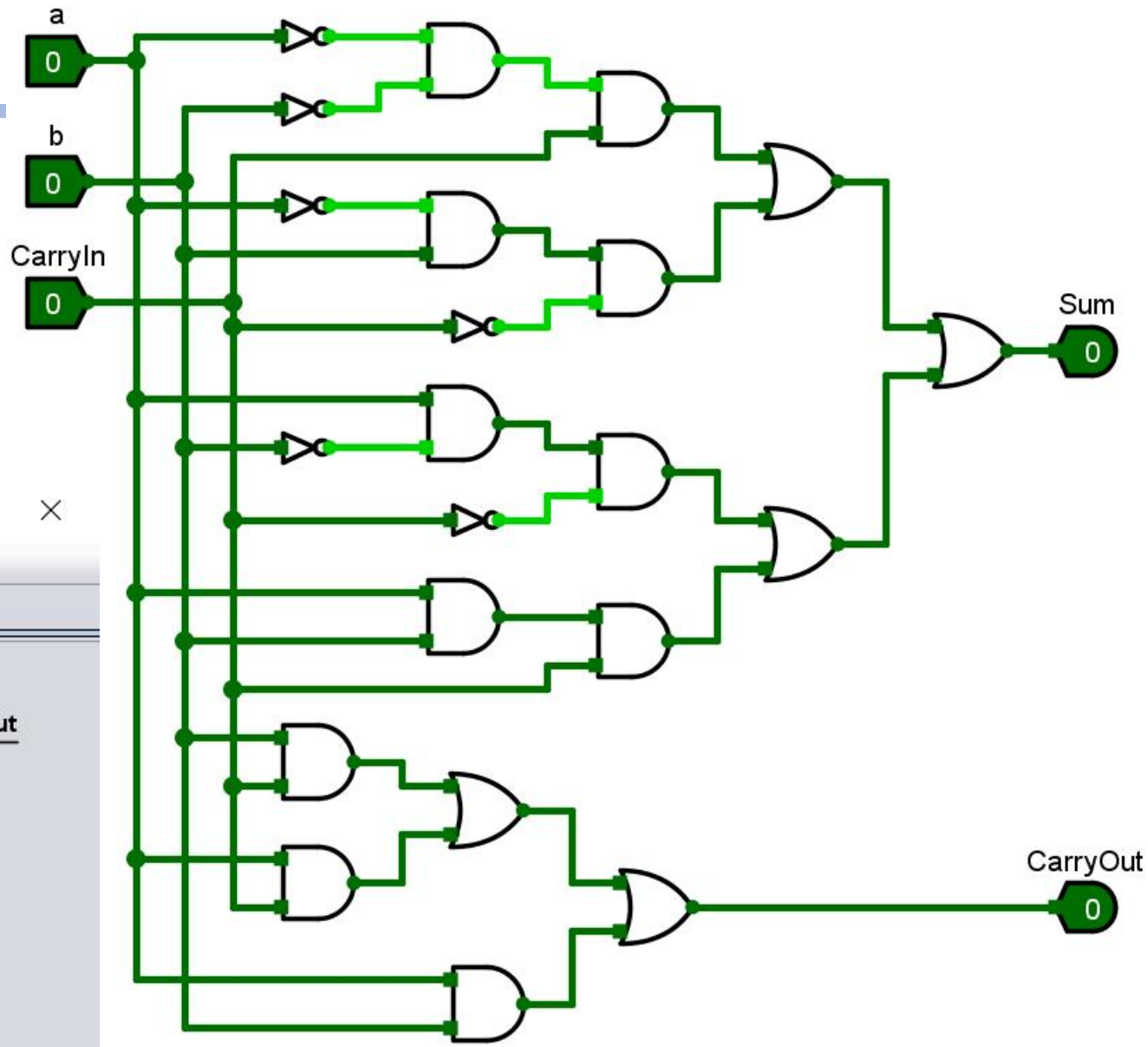

A 1-bit ALU that performs AND, OR, and addition

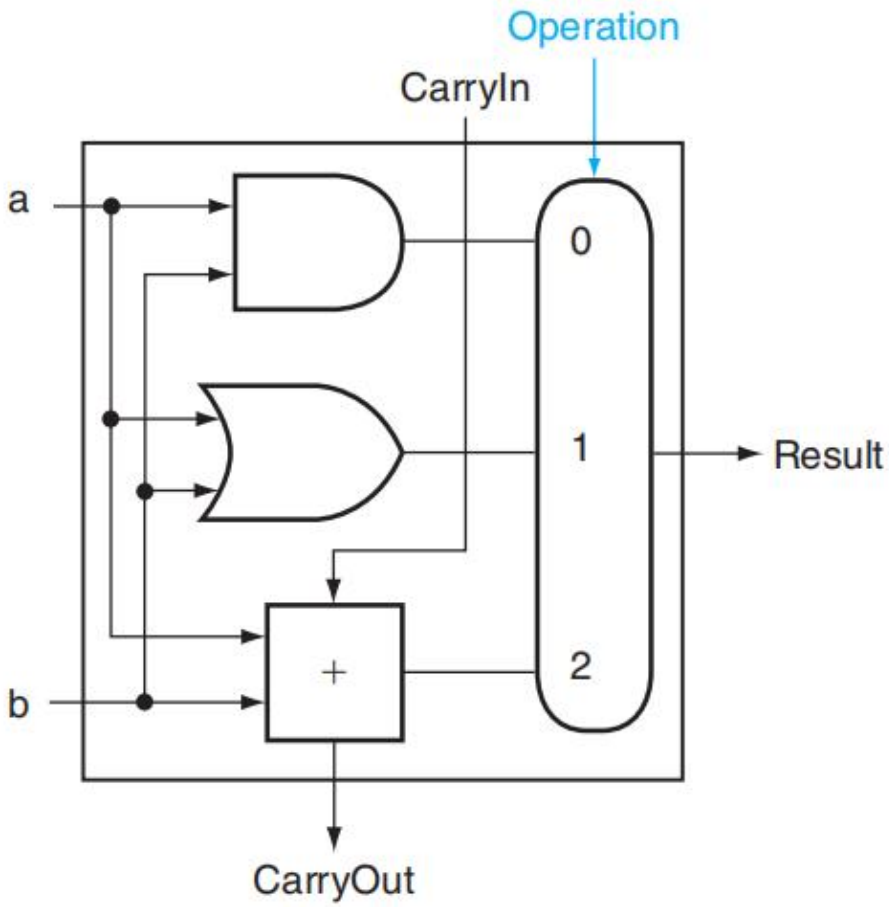

A 1-bit ALU that performs AND, OR, XOR,NOR and addition

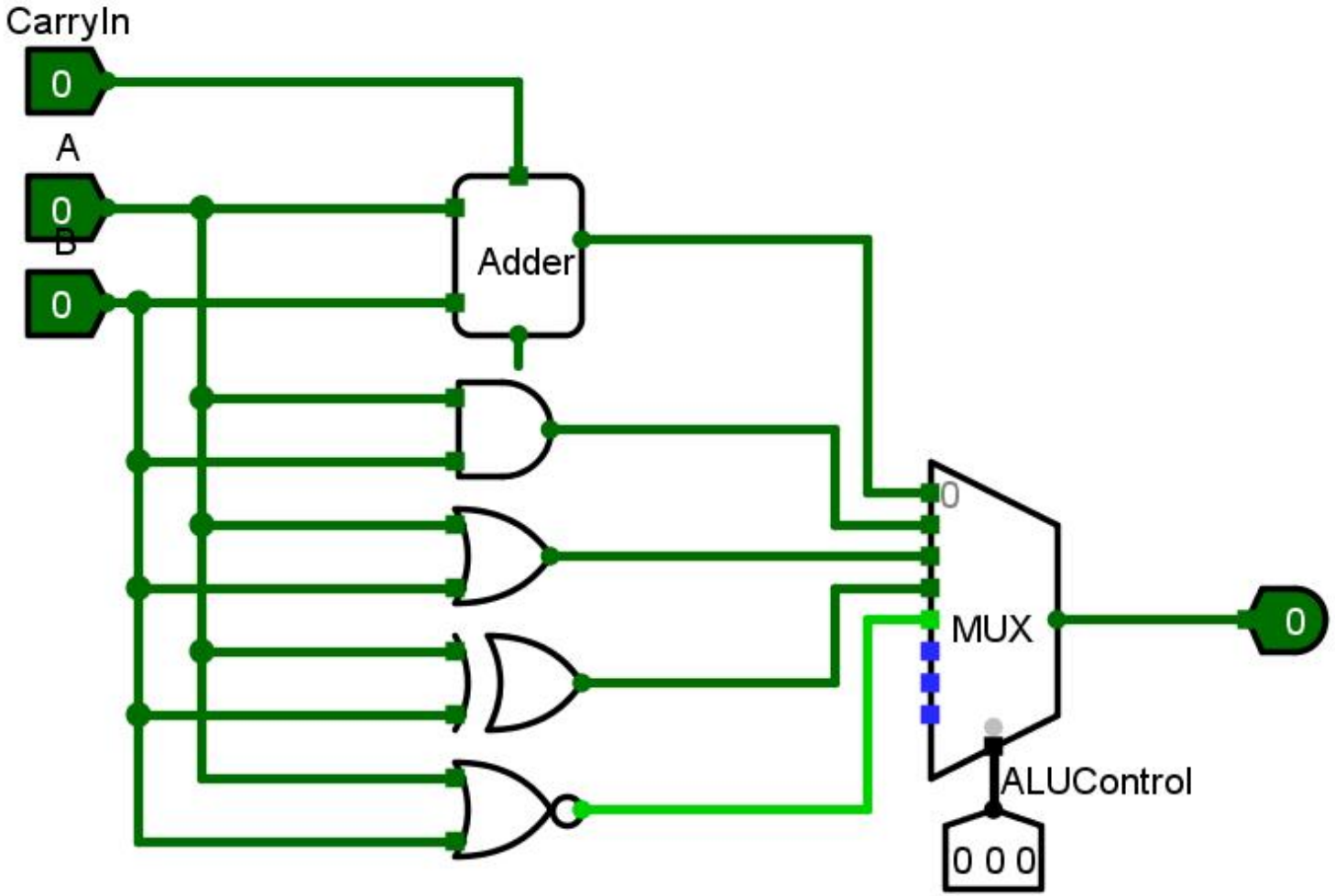

32bits Adder

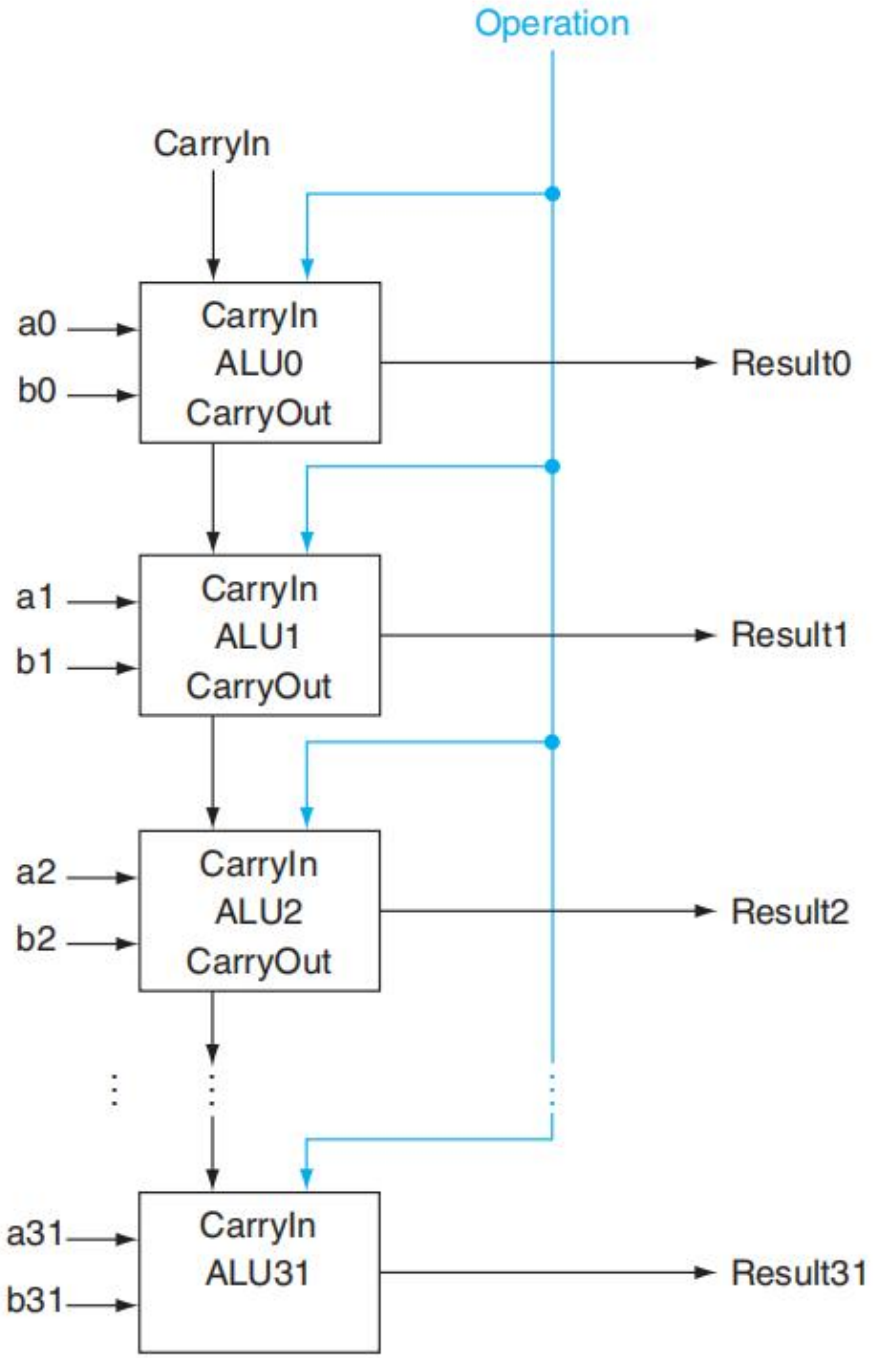

Perform subtract in adder

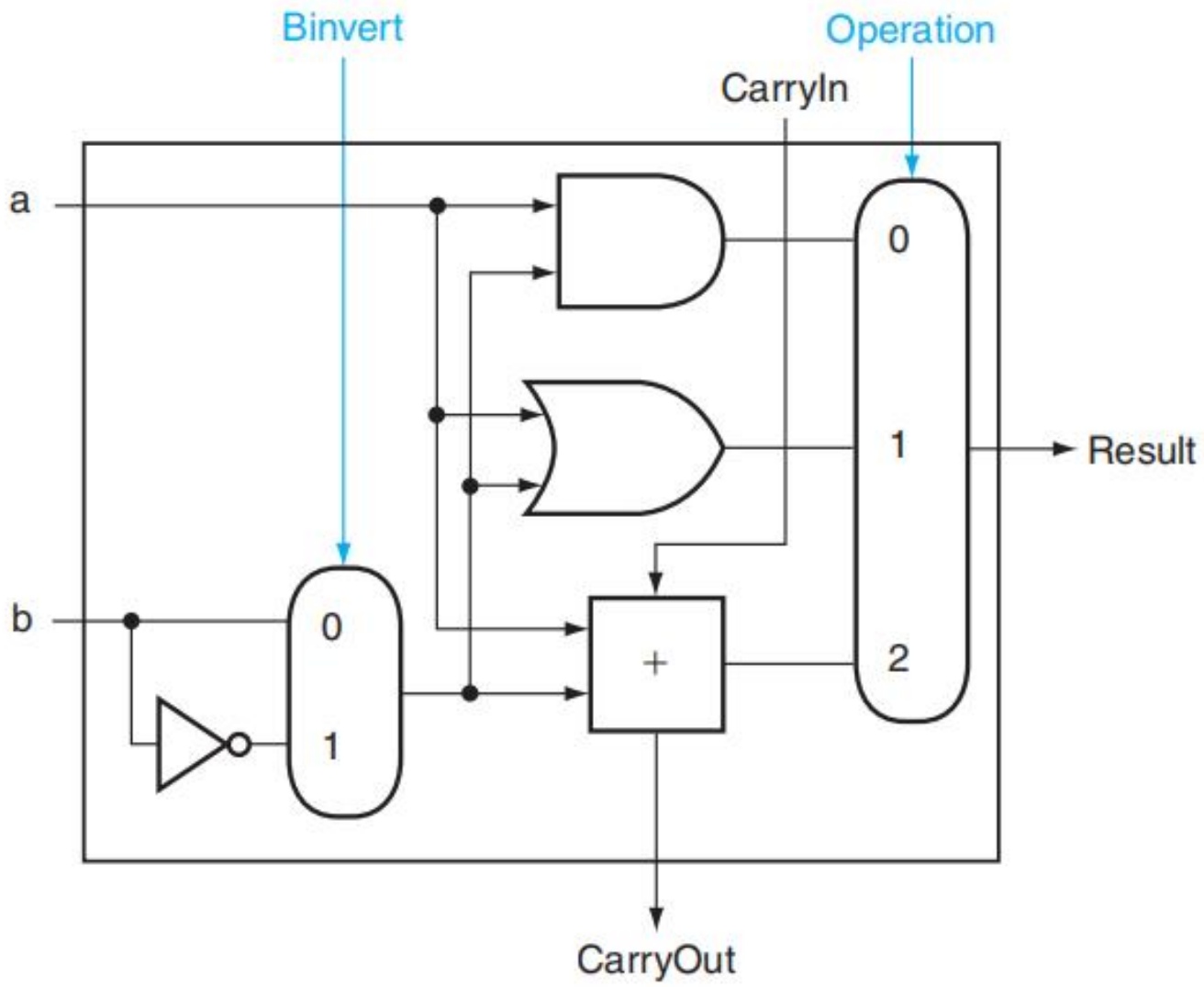

Alternative method for NOR

$$\overline{(a + b)} = \overline{a} \cdot \overline{b}$$

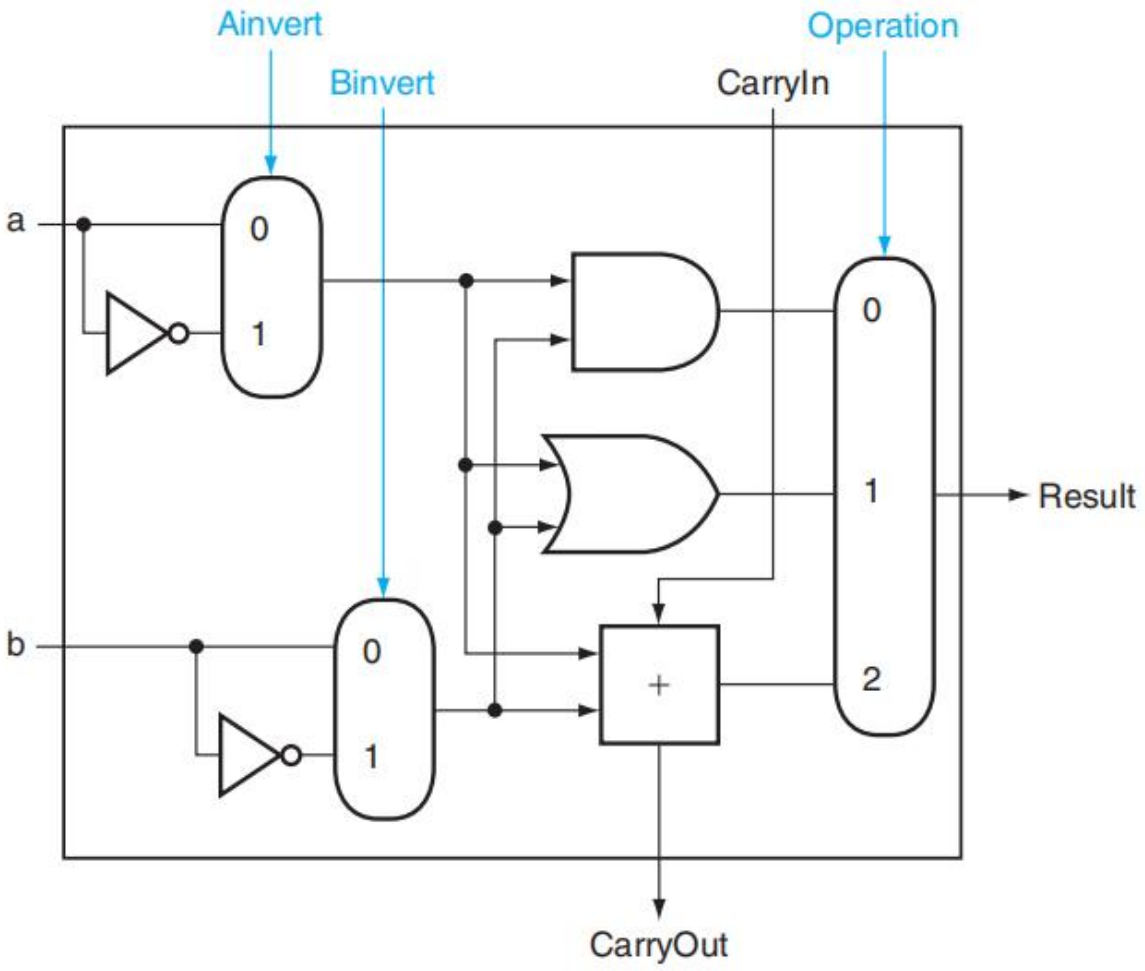

Alternative method for NOR

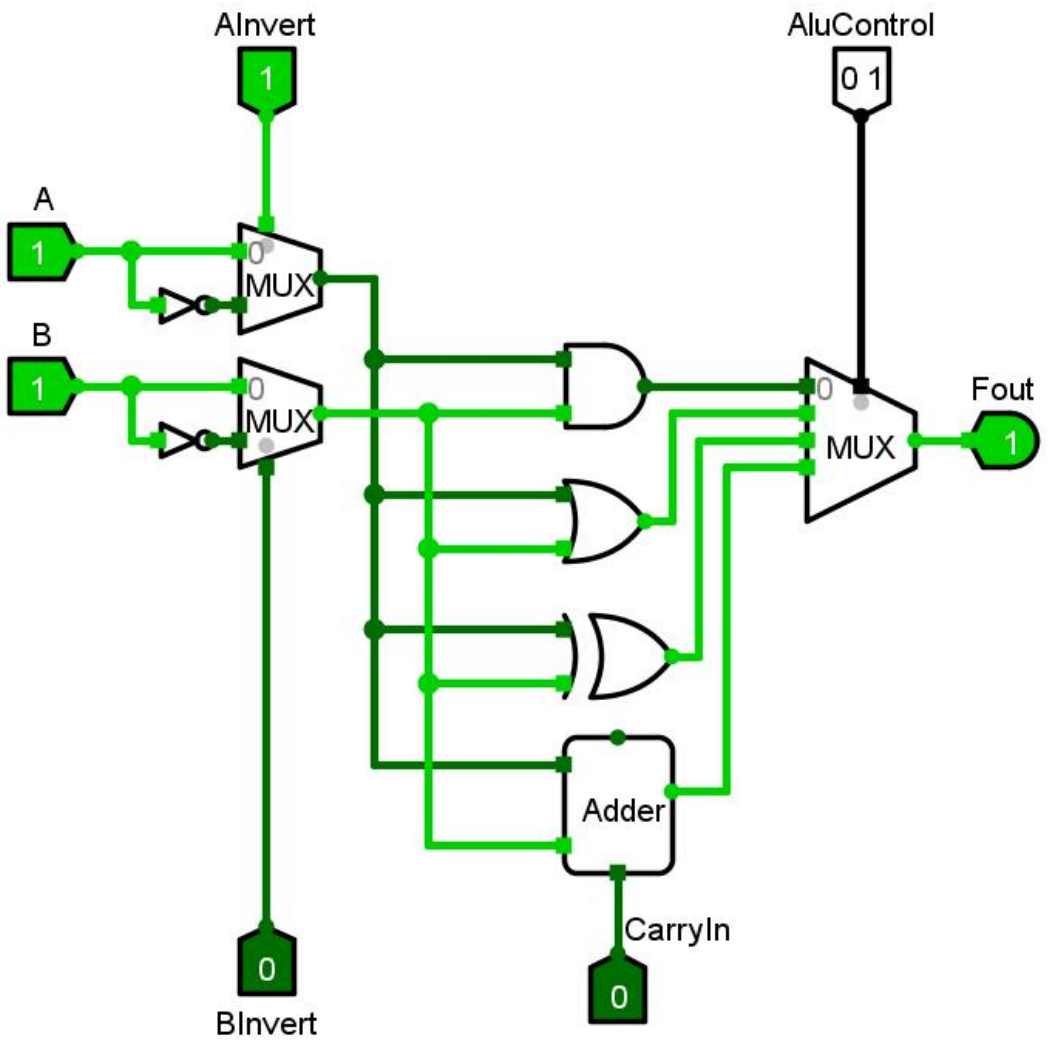

SLT

- The least signifi cant bit of a set on less than operation to be a 1 if a < b;

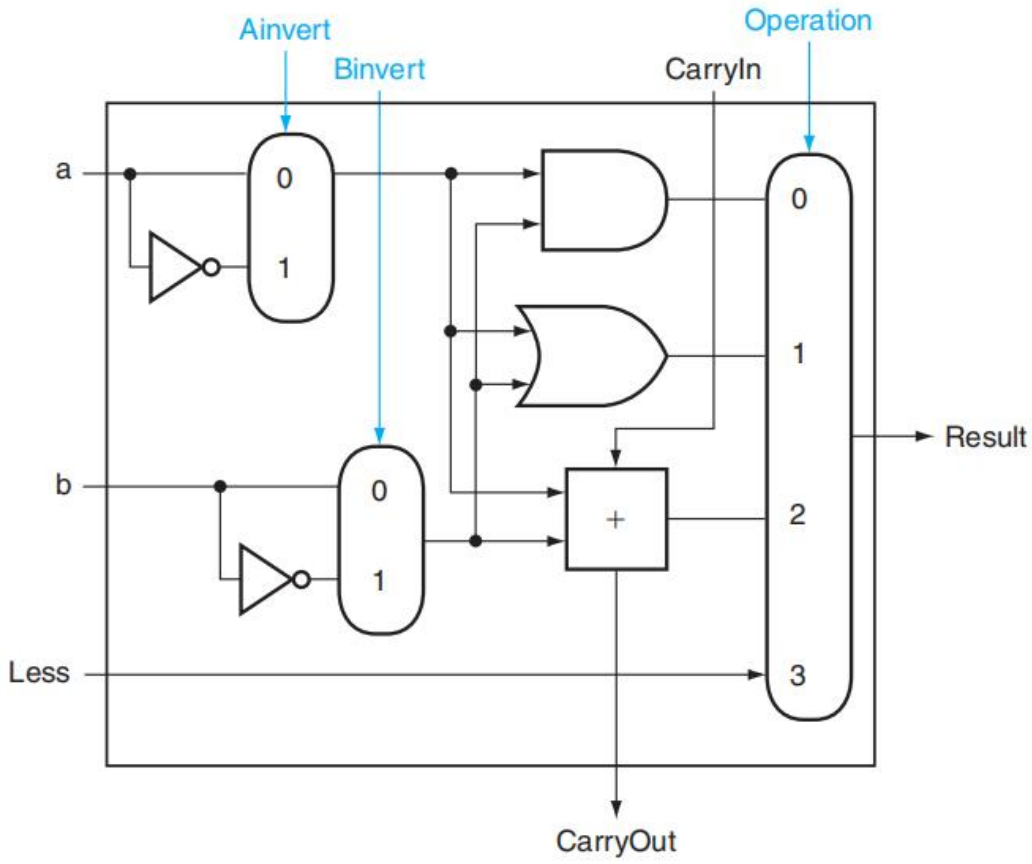

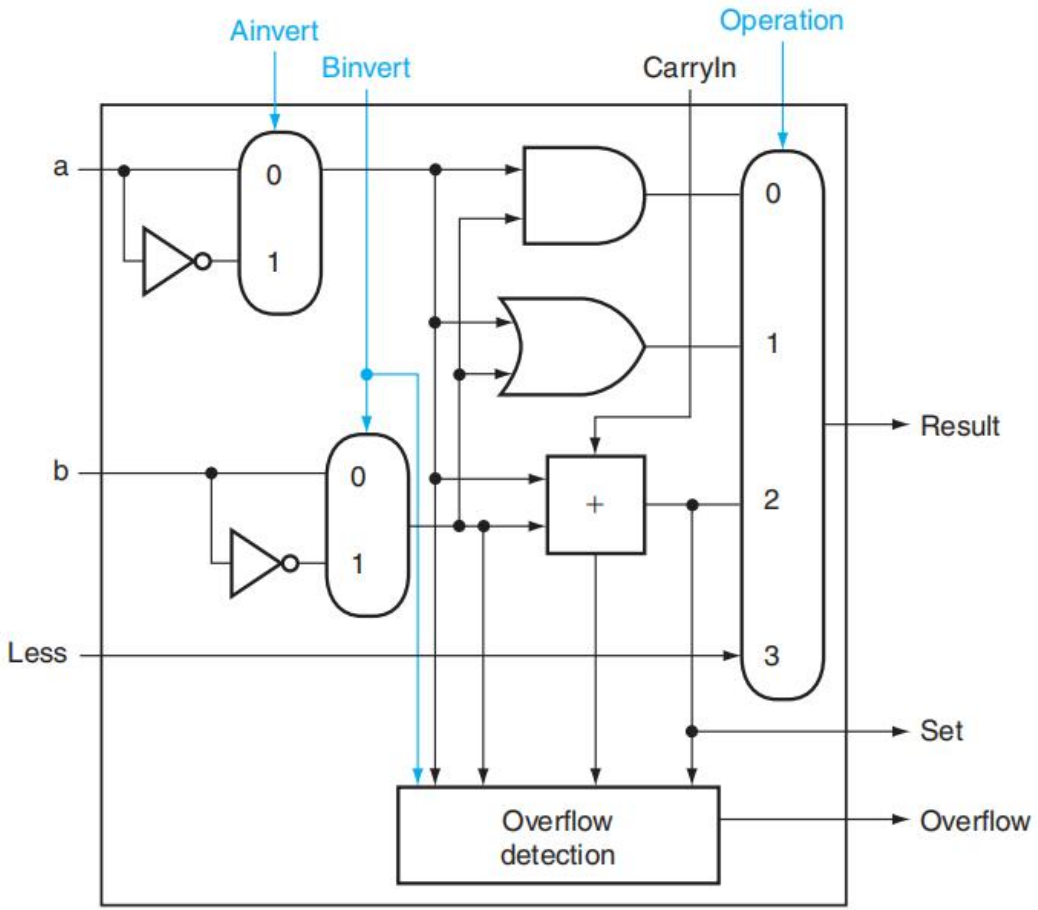

Overflow Unit

$$Overflow = \overline{aout} \cdot \overline{bout} \cdot BitSum + aout \cdot bout \cdot \overline{BitSum}$$

$$Overflow = CarryIn \oplus CarryOut$$

- Overflow in signed operation

a_{out}	b_{out}	CarryIn	BitSum	CarryOut	Overflow
0	0	0	0	0	0
0	0	1	1	0	1
0	1	0	1	0	0
0	1	1	0	1	0
1	0	0	1	0	0
1	0	1	0	1	0
1	1	0	0	1	1
1	1	1	1	1	0

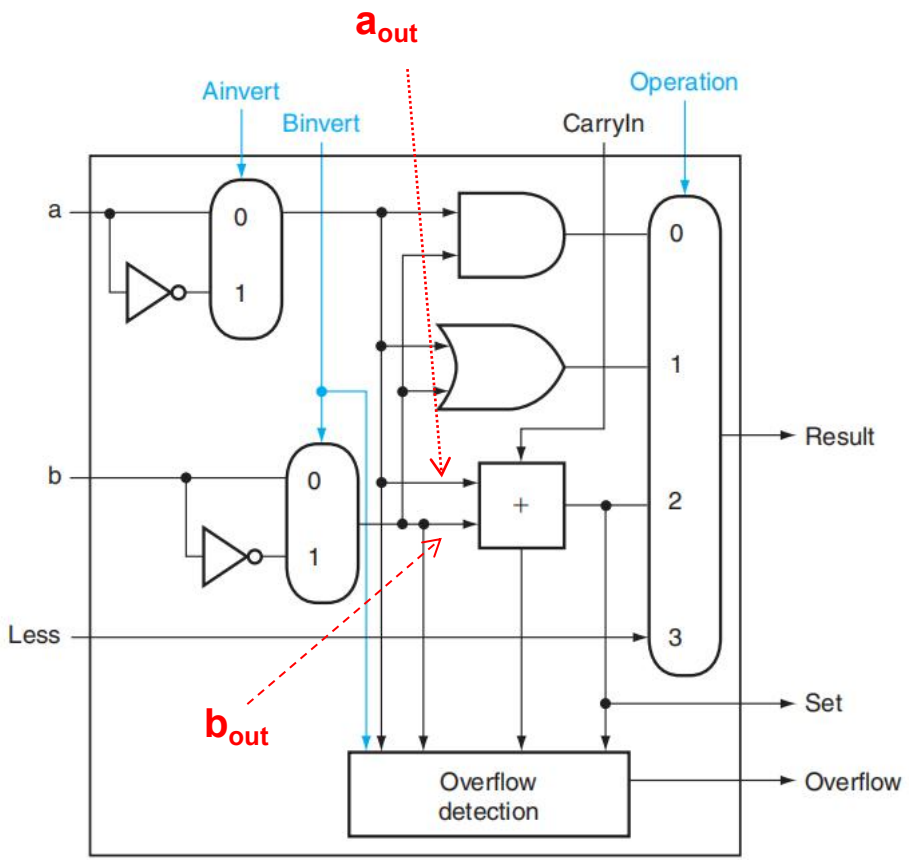

Overflow Unit

if a<b then less =1 else less=0
in this case the ALU performs a-b => $a_{out}+b_{out}+1$

a_{out}(a)	b_{out}(b)	CarryIn	CarryOut	BitSum	Overflow	Set
0(正)	0(负)	0	0	0	0	0
0(正)	0(负)	1	0	1	1	0
0	1	0	0	1	0	1
0	1	1	1	0	0	0
1	0	0	0	1	0	1
1	0	1	1	0	0	0
1(负)	1(正)	0	1	0	1	1
1(负)	1(正)	1	1	1	0	1

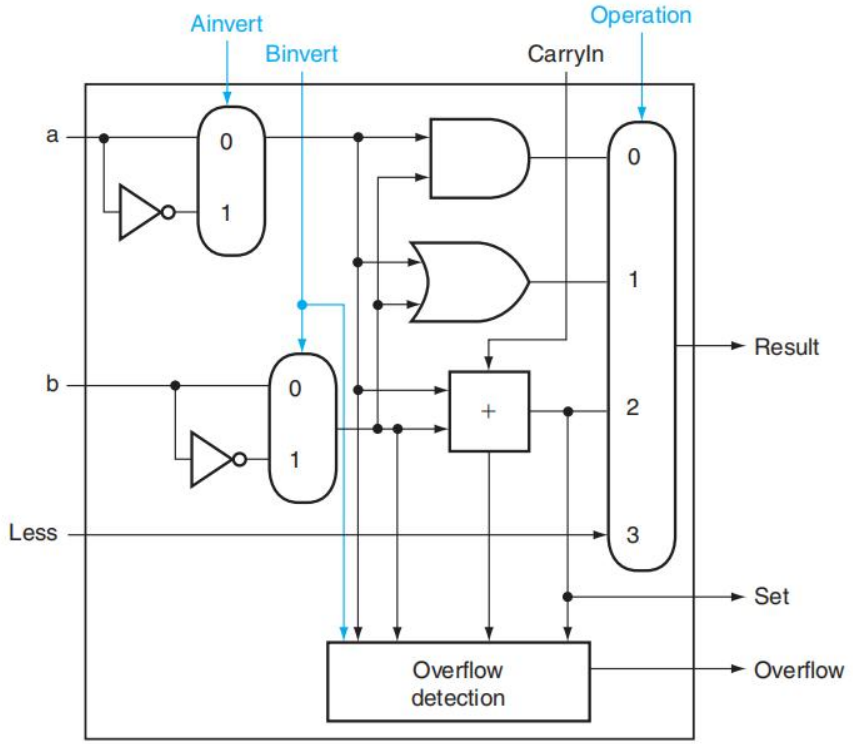

$$\text{Set} = \text{Overflow} \oplus \textit{BitSum}$$

32bit ALU

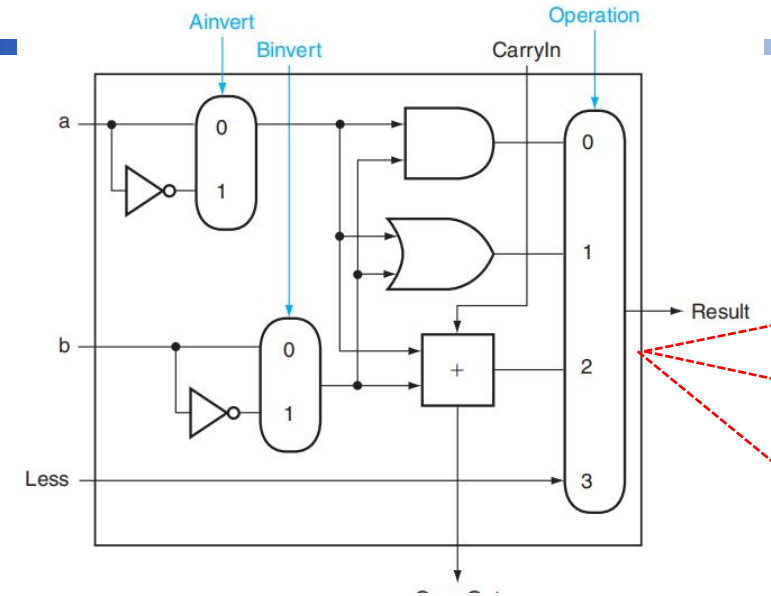
Ainvert
Binvert
CarryIn
Operation
a
b
Less
0
1
0
1
0
1
2
3
+
Result

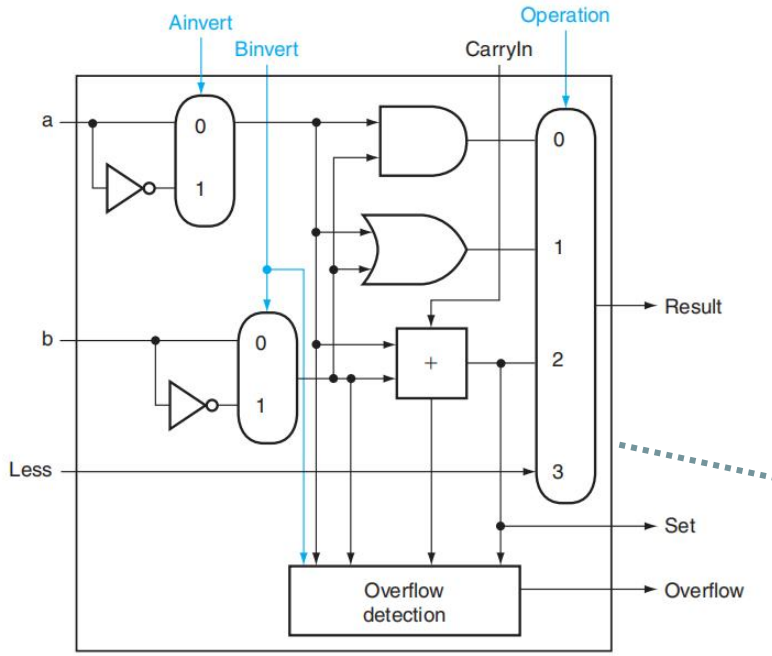
Ainvert
Binvert
CarryIn
Operation
a
b
Less
0
1
0
1
0
1
2
3
+
Result
Set
Overflow
Overflow detection

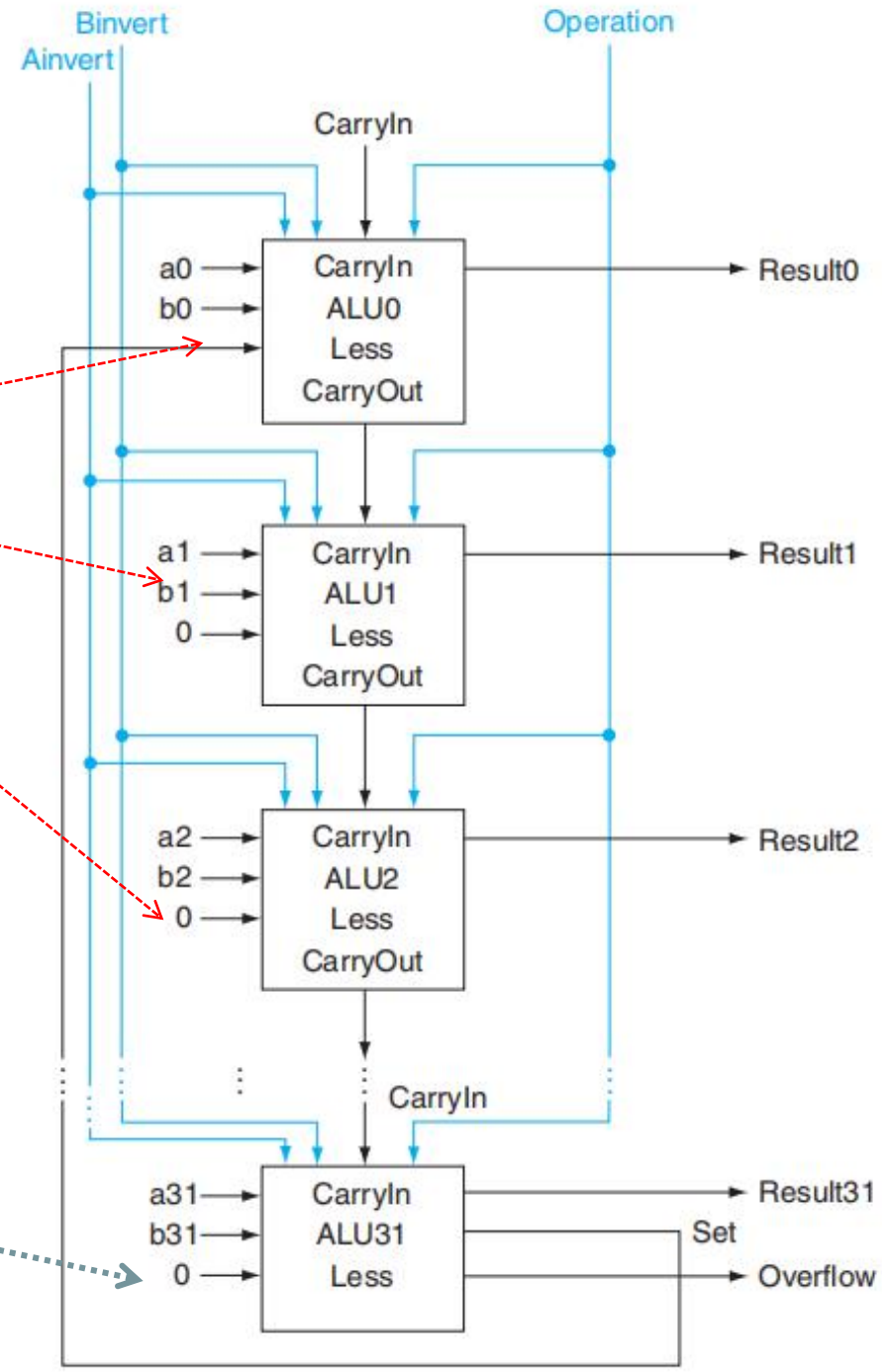
Binvert
Ainvert
Operation
CarryIn
a0
b0
CarryIn
ALU0
Less
CarryOut
Result0
a1
b1
0
CarryIn
ALU1
Less
CarryOut
Result1
a2
b2
0
CarryIn
ALU2
Less
CarryOut
Result2
CarryIn
a31
b31
0
CarryIn
ALU31
Less
Result31
Set
Overflow

Multiplication

- Start with long-multiplication approach

multiplicand → 1000

multiplier → × 1001

```
      1000
     0000
    0000
   1000
```

product → 1001000

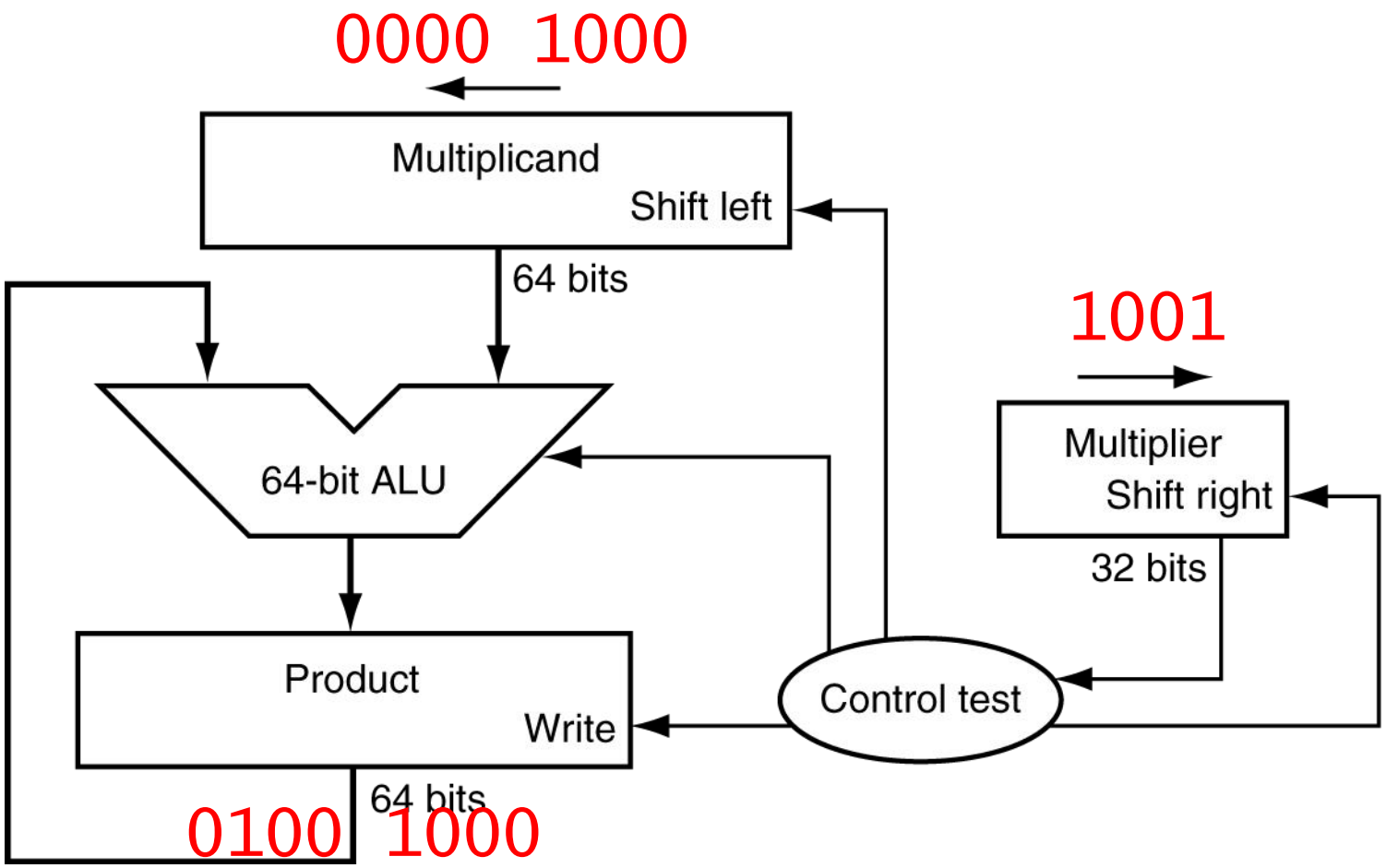

Multiplication Hardware

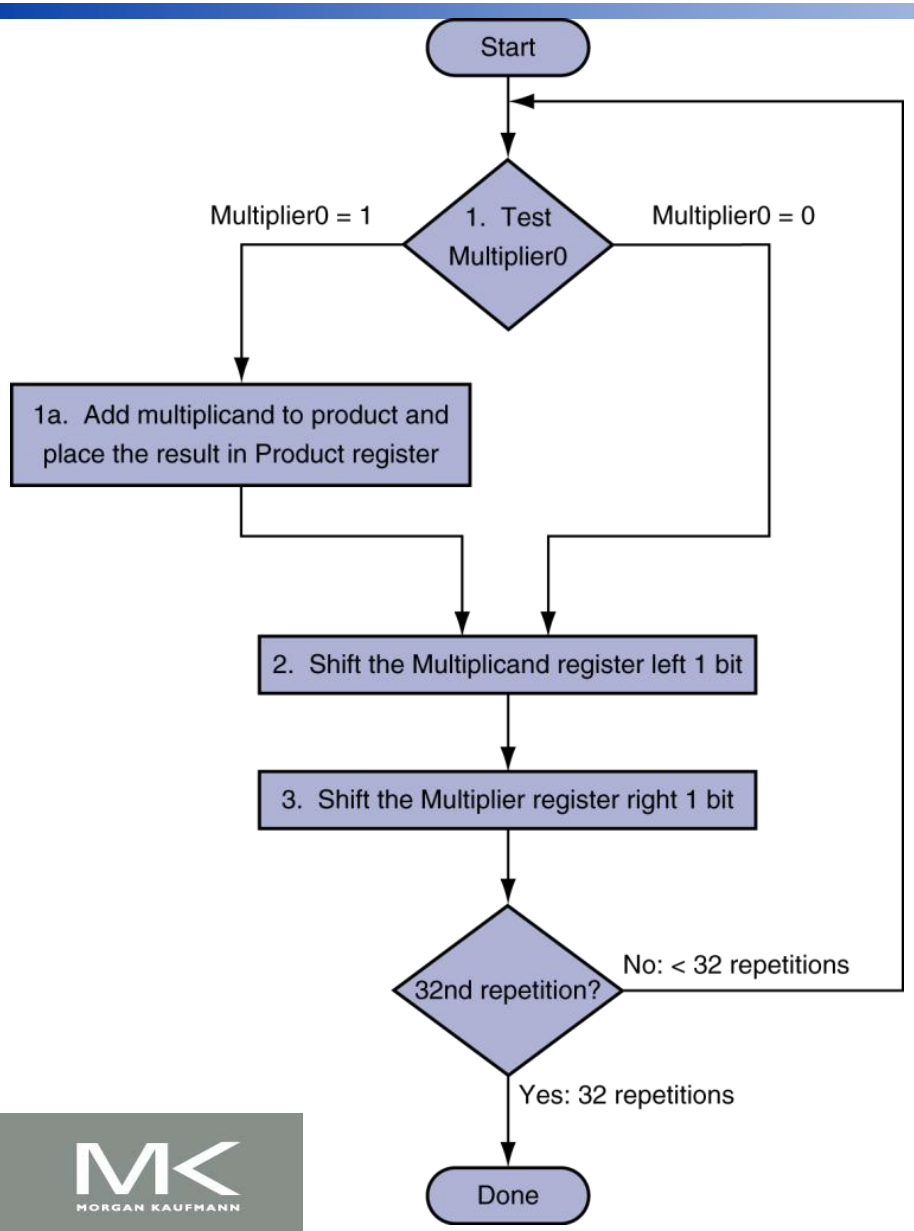

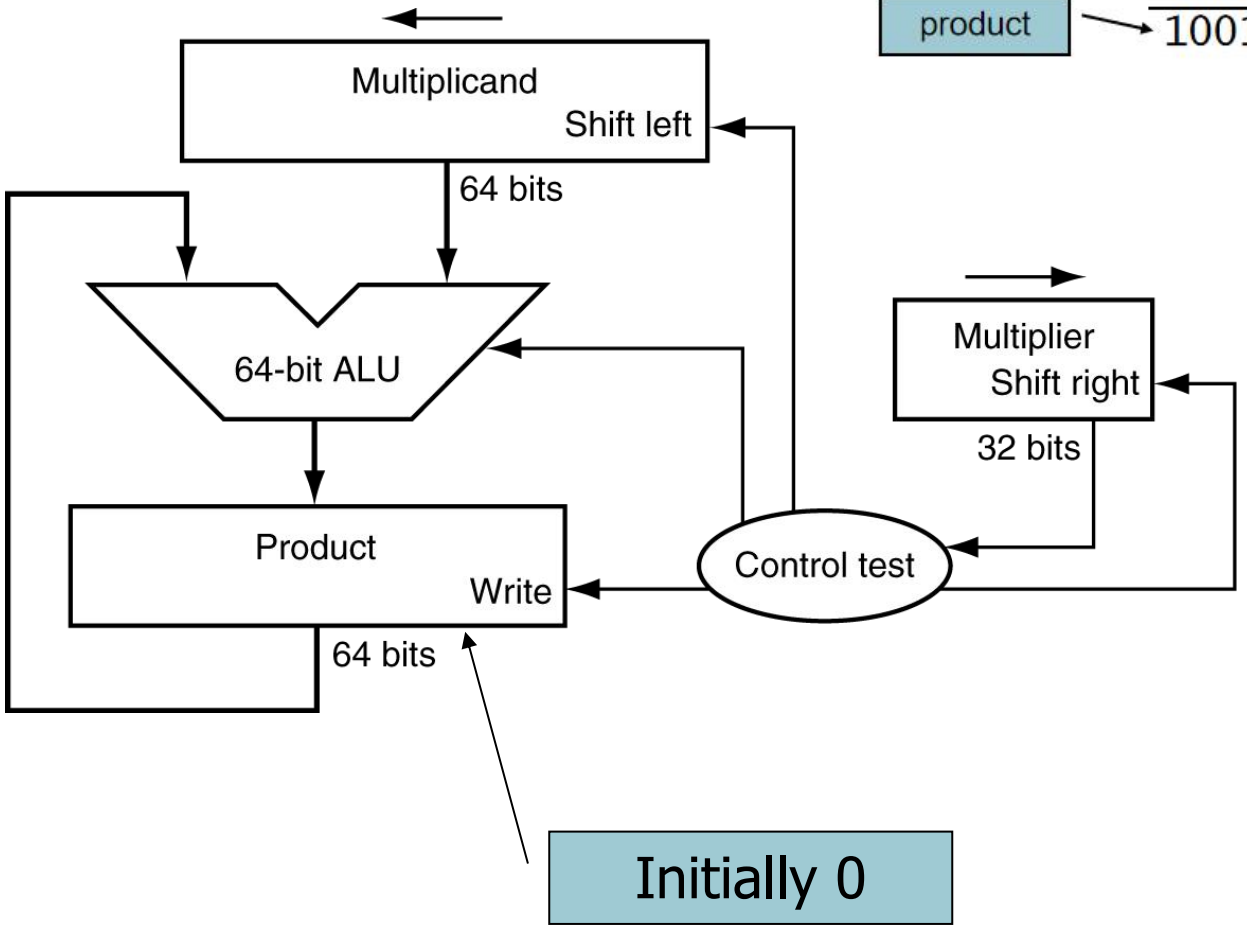

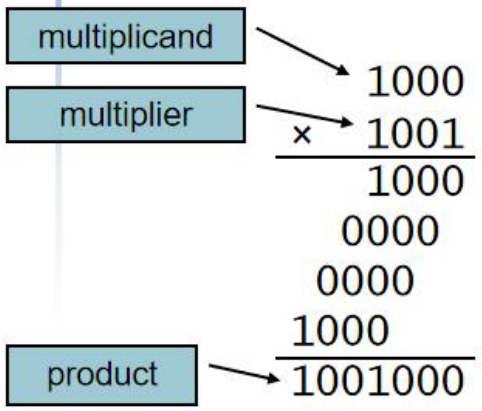

A Multiply Algorithm

Using 4-bit numbers to save space, multiply $2_{ten} \times 3_{ten}$, or $0010_{two} \times 0011_{two}$.

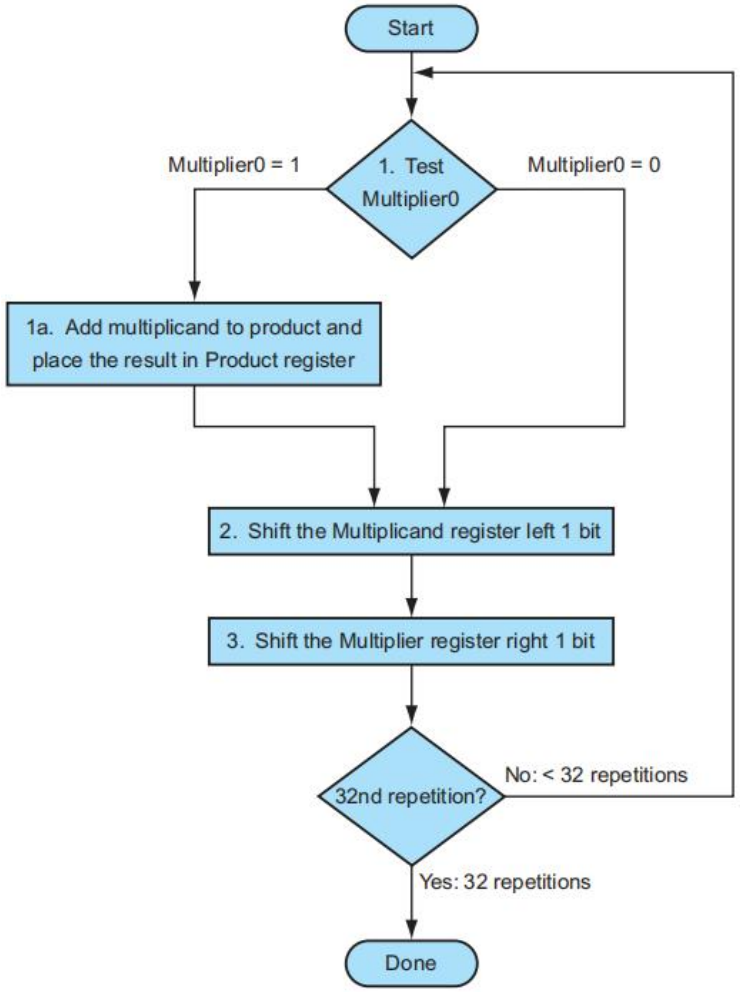

Multiplicand in low half part

Iteration	Step	Multiplier	Multiplicand	Product
0	Initial values	0011	0000 0010	0000 0000
1	1a: 1 ⟹ Prod = Prod + Mcand	0011	0000 0010	0000 0010
	2: Shift left Multiplicand	0011	0000 0100	0000 0010
	3: Shift right Multiplier	0001	0000 0100	0000 0010
2	1a: 1 ⟹ Prod = Prod + Mcand	0001	0000 0100	0000 0110
	2: Shift left Multiplicand	0001	0000 1000	0000 0110
	3: Shift right Multiplier	0000	0000 1000	0000 0110
3	1: 0 ⟹ No operation	0000	0000 1000	0000 0110
	2: Shift left Multiplicand	0000	0001 0000	0000 0110
	3: Shift right Multiplier	0000	0001 0000	0000 0110
4	1: 0 ⟹ No operation	0000	0001 0000	0000 0110
	2: Shift left Multiplicand	0000	0010 0000	0000 0110
	3: Shift right Multiplier	0000	0010 0000	0000 0110

MORGAN KAUFMANN

Optimized Multiplier

- Perform steps in parallel: add/shift

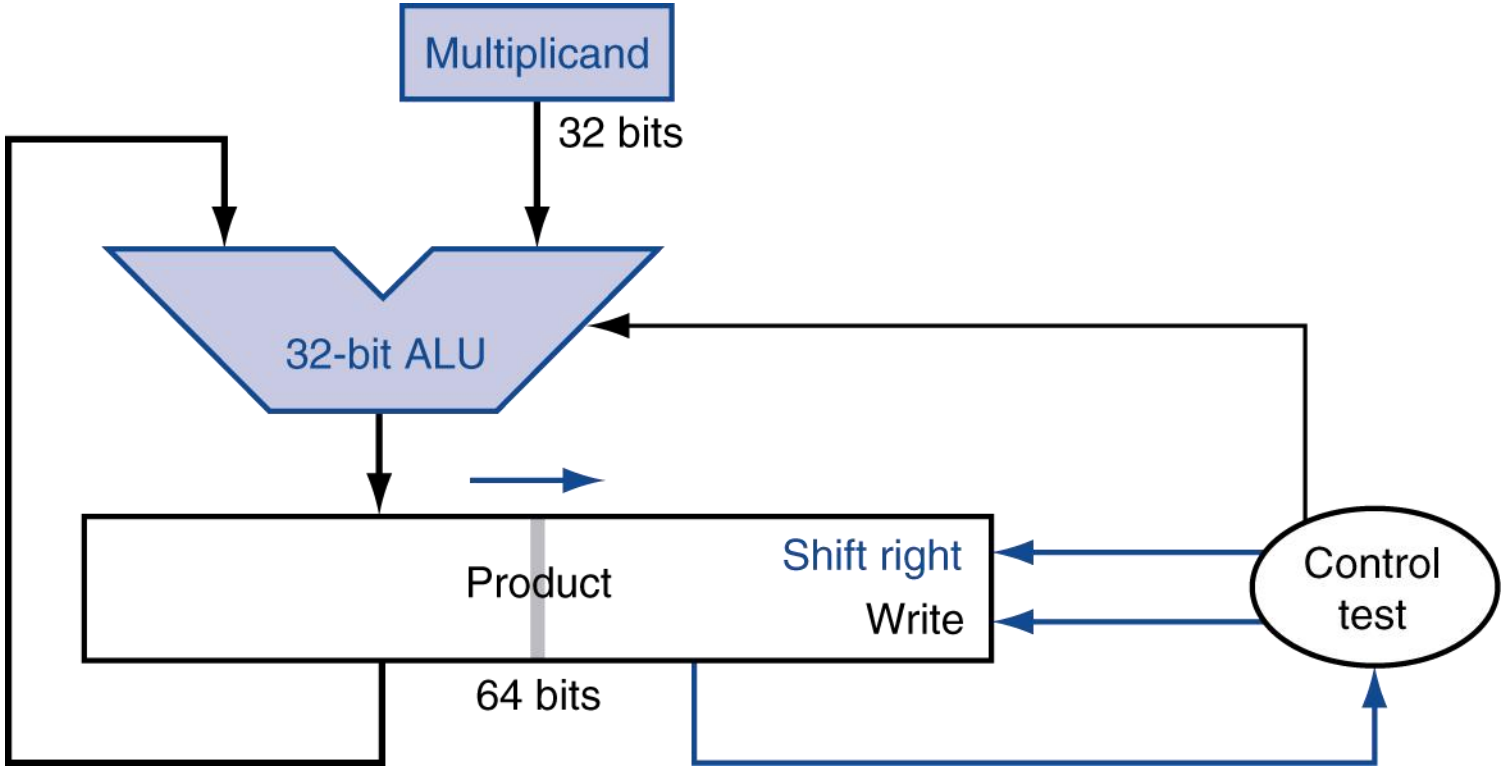

- One cycle per partial-product addition
  - That's ok, if frequency of multiplications is low

A Multiply Algorithm

Using 4-bit numbers to save space, multiply $2_{ten} \times 3_{ten}$, or $0010_{two} \times 0011_{two}$.

MIPS Multiplication

- Two 32-bit registers for product
  - HI: most-significant 32 bits
  - LO: least-significant 32 bits
- Instructions
  - `mult rs, rt / multu rs, rt`
    - 64-bit product in HI/LO
  - `mfhi rd / mflo rd`
    - Move from HI/LO to rd
    - Can test HI value to see if product overflows 32 bits
  - `mul rd, rs, rt`
    - Least-significant 32 bits of product –> rd

Division

quotient

dividend

divisor

remainder

```
        1001
1000 )1001010
     -1000
       0010
        0101
         1010
        -1000
          010
```

- Check for 0 divisor
- Long division approach
  - If divisor ≤ dividend bits
    - 1 bit in quotient, subtract
  - Otherwise
    - 0 bit in quotient, bring down next dividend bit
- Restoring division
  - Do the subtract, and if remainder goes < 0, add divisor back
- Signed division
  - Divide using absolute values
  - Adjust sign of quotient and remainder as required

- The dividend and remainder must have the same signs

MK MORGAN KAUFMANN

Division Hardware

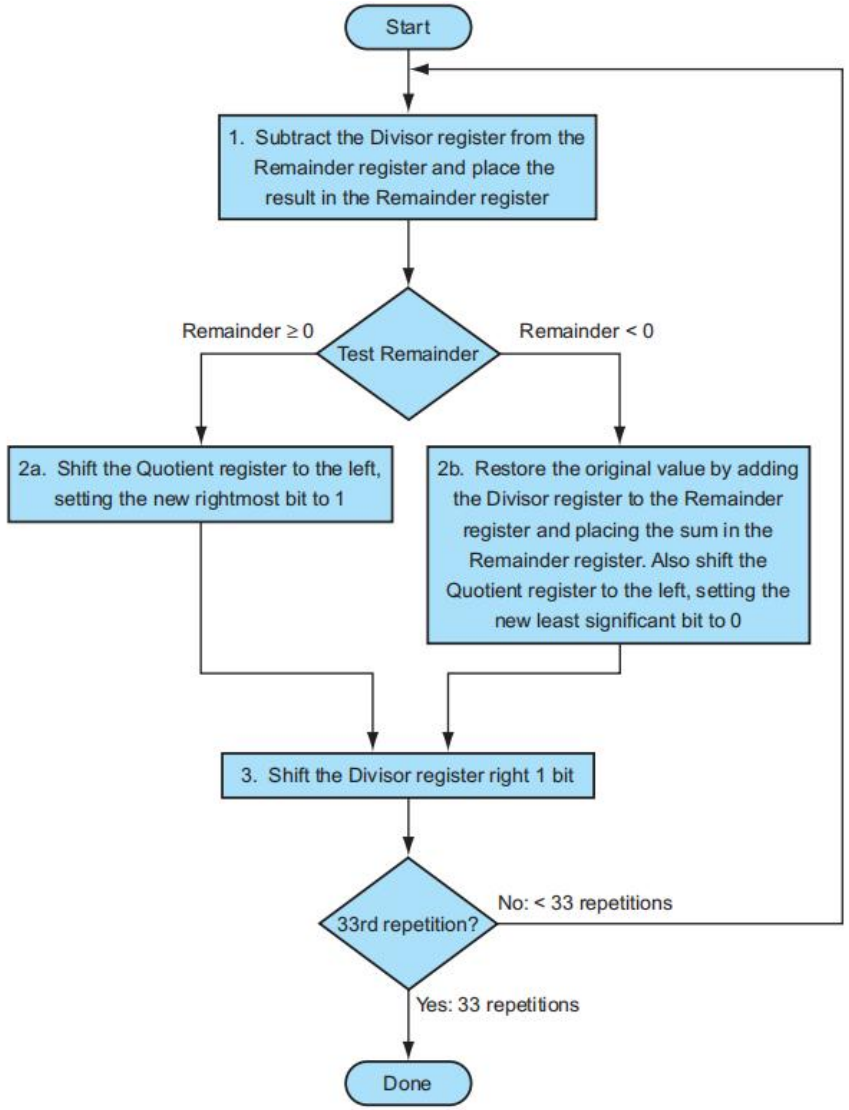

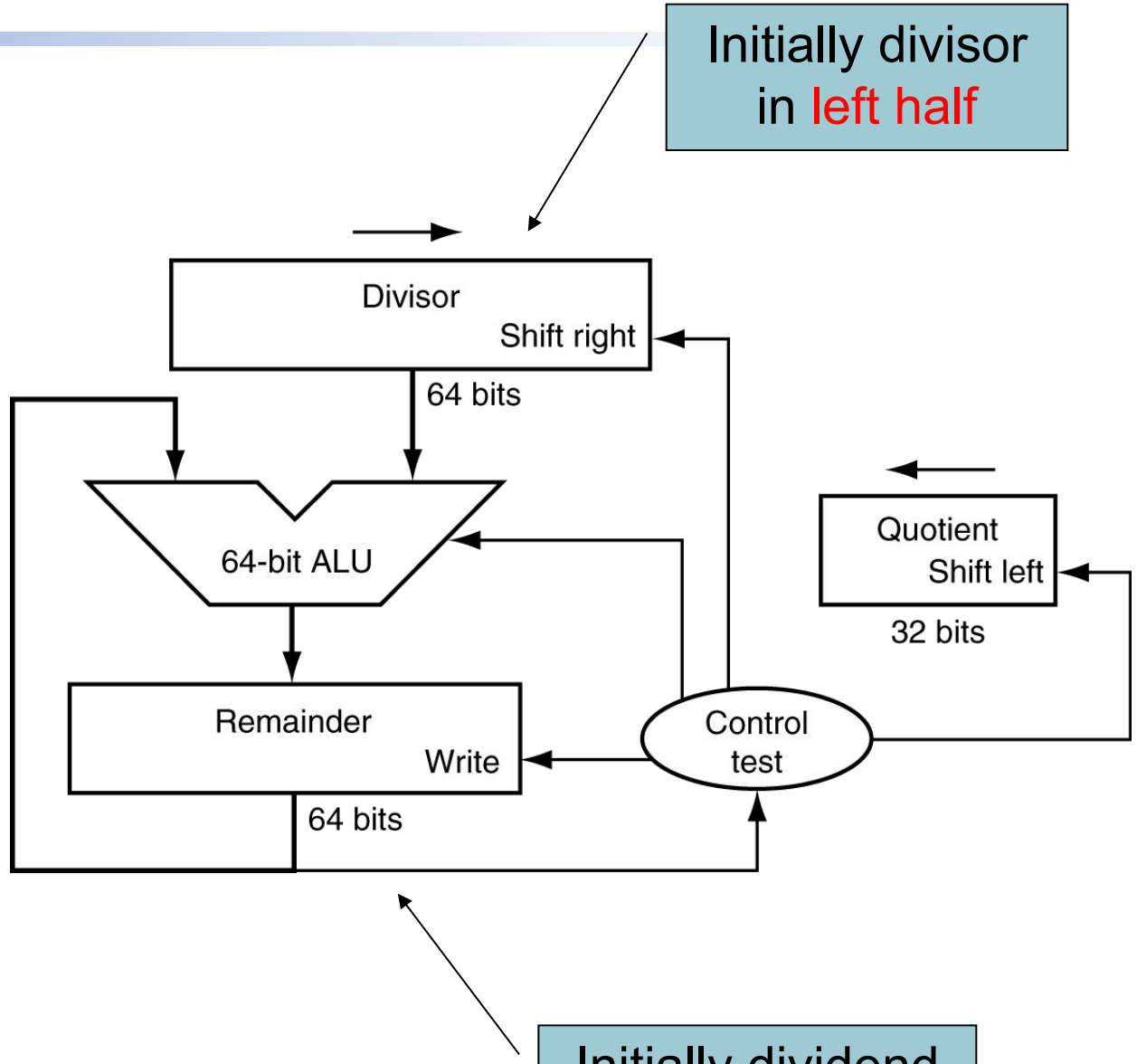

Using a 4-bit version of the algorithm to save pages, let’s try dividing 7_{ten} by 2_{ten}, or $0000\ 0111_{two}$ by 0010_{two}

Iteration	Step	Quotient	Divisor	Remainder
0	Initial values	0000	0010 0000	0000 0111
1	1: Rem = Rem – Div	0000	0010 0000	1110 0111
	2b: Rem < 0 ⟹ +Div, sll Q, Q0 = 0	0000	0010 0000	0000 0111
	3: Shift Div right	0000	0001 0000	0000 0111
2	1: Rem = Rem – Div	0000	0001 0000	1111 0111
	2b: Rem < 0 ⟹ +Div, sll Q, Q0 = 0	0000	0001 0000	0000 0111
	3: Shift Div right	0000	0000 1000	0000 0111
3	1: Rem = Rem – Div	0000	0000 1000	1111 1111
	2b: Rem < 0 ⟹ +Div, sll Q, Q0 = 0	0000	0000 1000	0000 0111
	3: Shift Div right	0000	0000 0100	0000 0111
4	1: Rem = Rem – Div	0000	0000 0100	0000 0011
	2a: Rem ≥ 0 ⟹ sll Q, Q0 = 1	0001	0000 0100	0000 0011
	3: Shift Div right	0001	0000 0010	0000 0011
5	1: Rem = Rem – Div	0001	0000 0010	0000 0001
	2a: Rem ≥ 0 ⟹ sll Q, Q0 = 1	0011	0000 0010	0000 0001
	3: Shift Div right	0011	0000 0001	0000 0001

MORGAN KAUFMANN

Optimized Divider

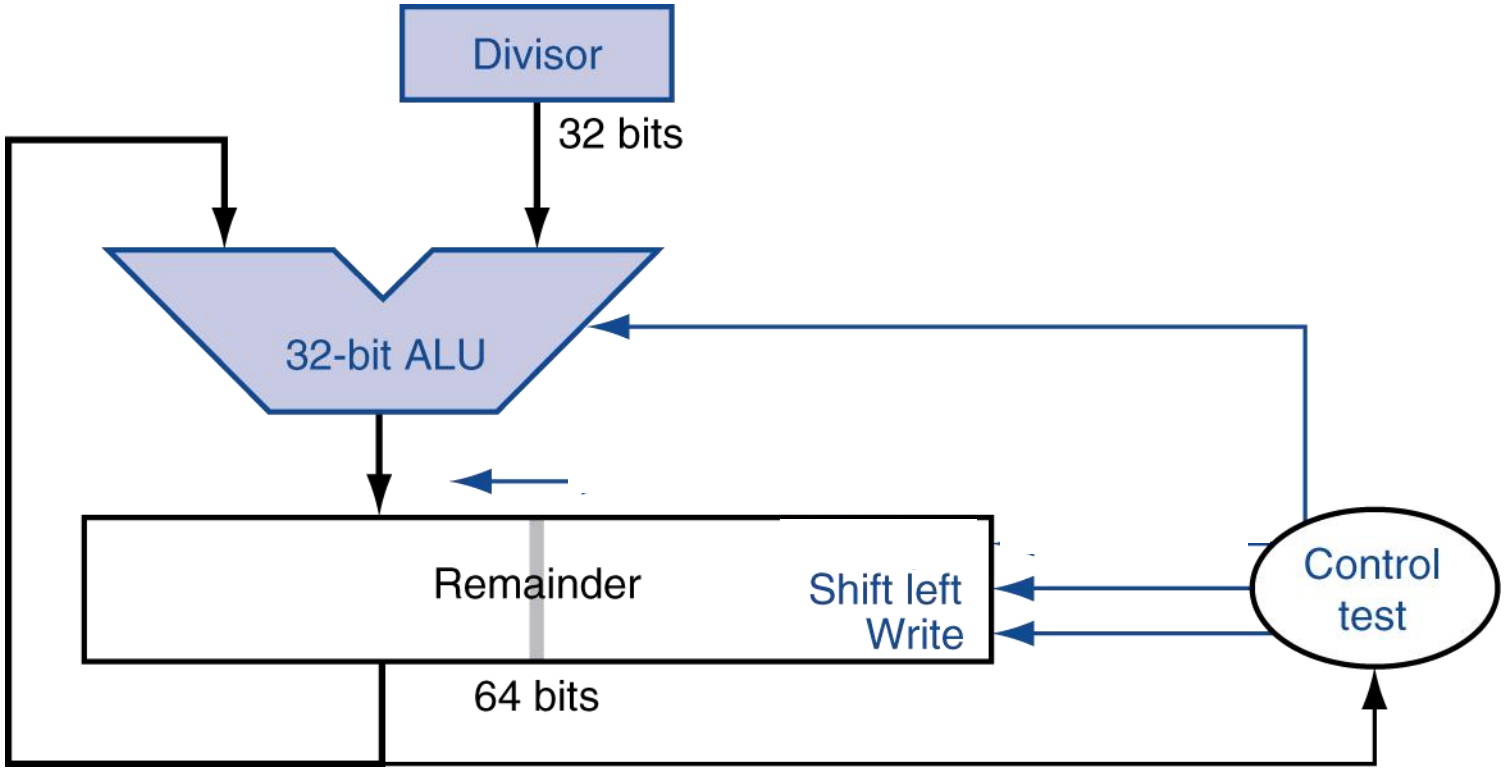

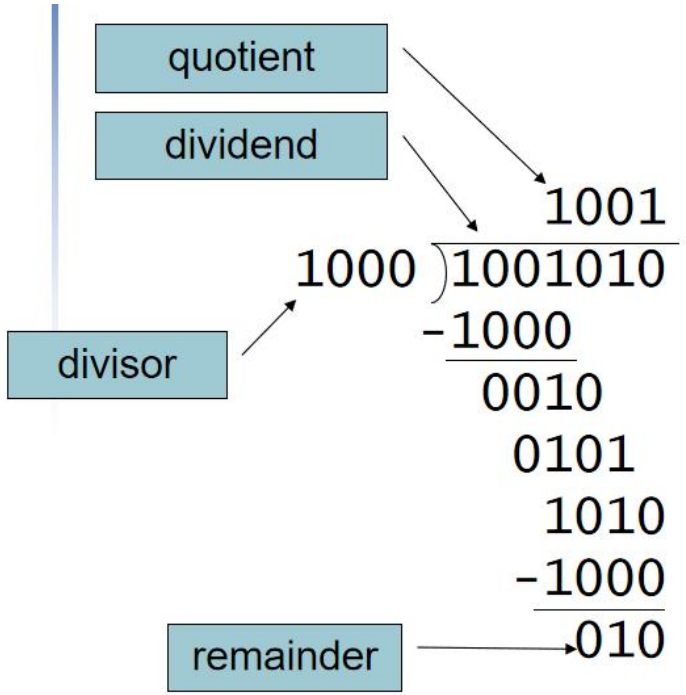

- One cycle per partial-remainder subtraction
- Looks a lot like a multiplier!
  - Same hardware can be used for both

MIPS Division

- Use HI/LO registers for result
  - HI: 32-bit remainder
  - LO: 32-bit quotient
- Instructions
  - `div rs, rt` / `divu rs, rt`
  - No overflow or divide-by-0 checking
    - Software must perform checks if required
  - Use `mfhi`, `mflo` to access result

MIPS multiply and divide

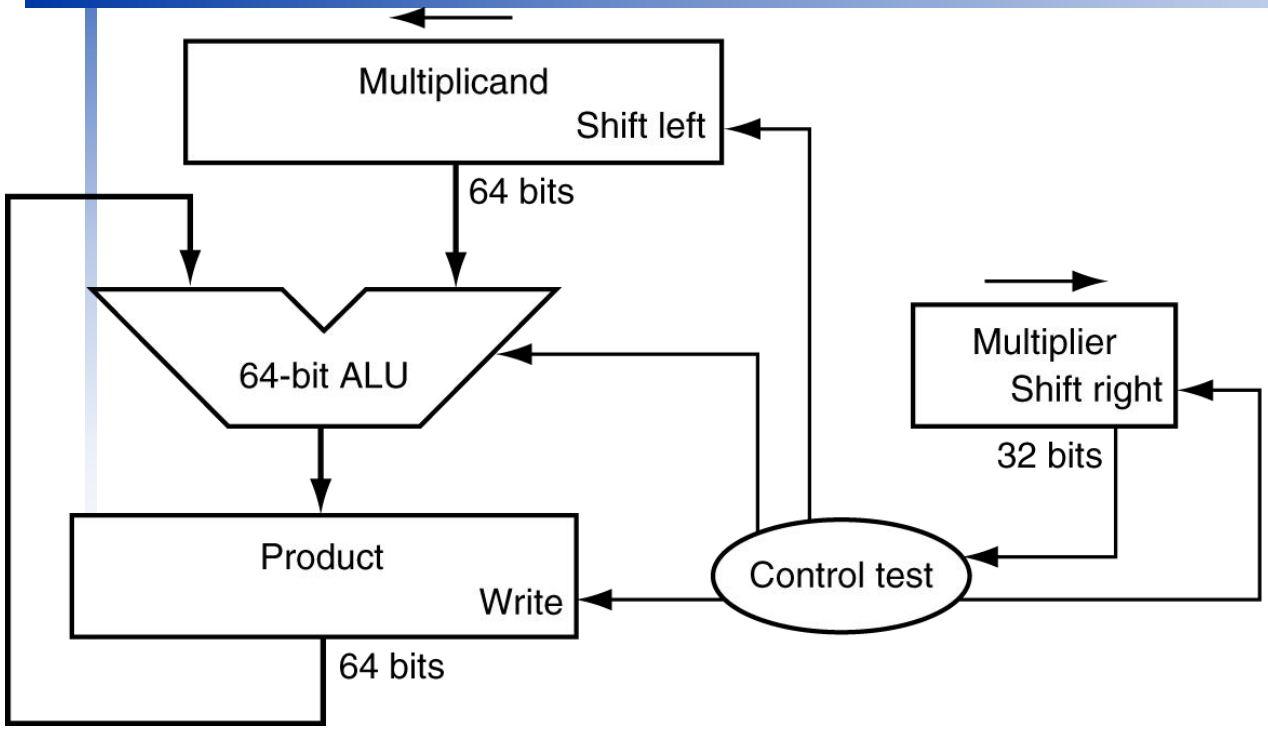

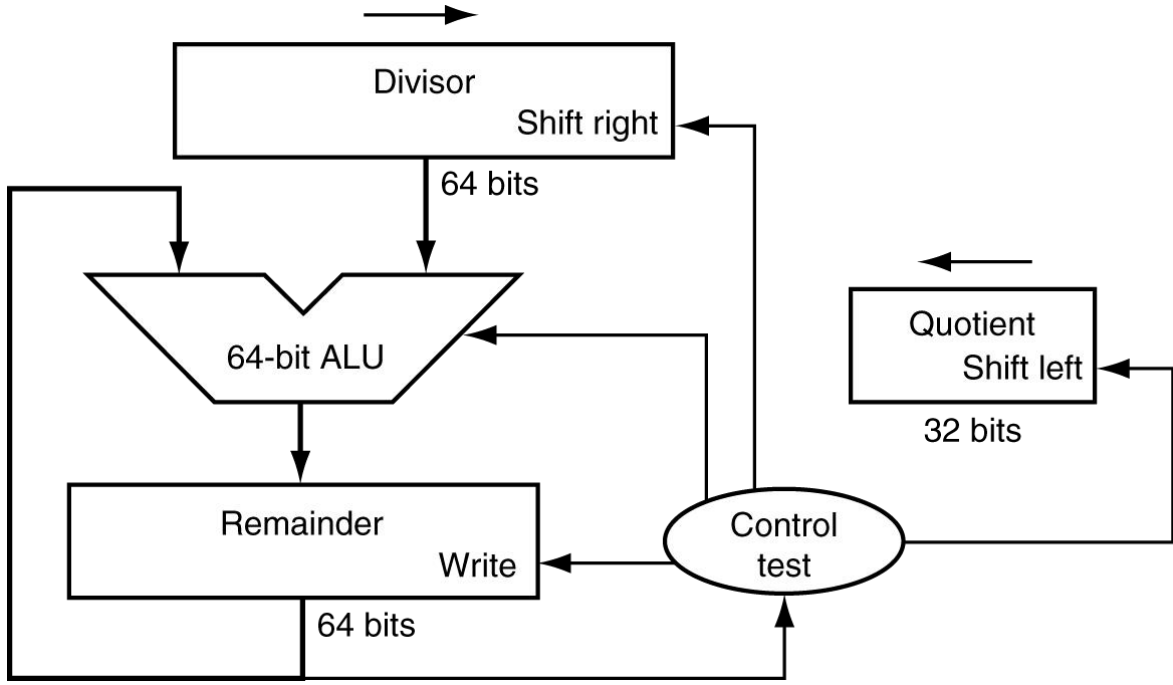

- The same sequential hardware can be used for both multiply and divide
- The only requirement is a 64-bit register that can shift left or right and
- a 32-bit ALU that adds or subtracts.
- MIPS uses the 32-bit Hi and 32-bit Lo registers for both multiply and divide

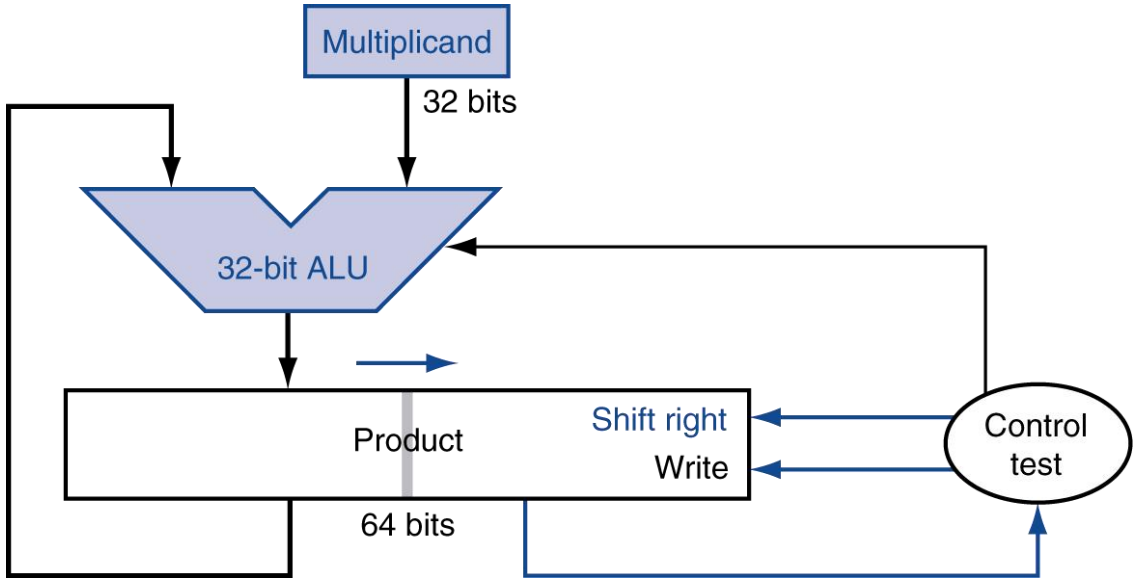
Multiplicand
32 bits
32-bit ALU
Product
Shift right
Write
64 bits
Control
test

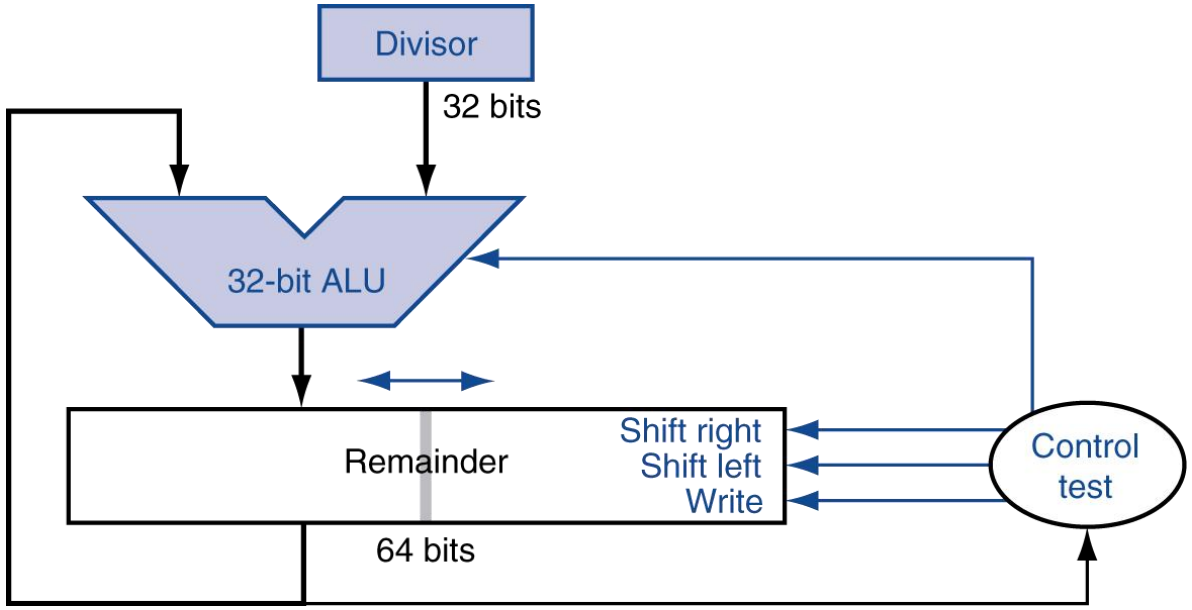
Divisor
32 bits
32-bit ALU
Remainder
Shift right
Shift left
Write
64 bits
Control
test

Break!

Floating Point

- Representation for non-integral numbers
  - Including very small and very large numbers
- Like scientific notation
  - -2.34×10^{56}
  - $+0.002 \times 10^{-4}$
  - $+987.02 \times 10^{9}$
- In binary
  - $\pm 1.xxxxxxx_2 \times 2^{yyyy}$
- Types `float` and `double` in C

Floating Point Standard

- Defined by IEEE Std 754-1985
- Developed in response to divergence of representations
  - Portability issues for scientific code
- Now almost universally adopted
- Two representations
  - Single precision (32-bit)
  - Double precision (64-bit)

IEEE Floating-Point Format

single: 8 bits
double: 11 bits

single: 23 bits
double: 52 bits

S	Exponent	Fraction

- S: sign bit (0 ⇒ non-negative, 1 ⇒ negative)
- Normalize significand: 1.0 ≤ |significand| < 2.0
  - Always has a leading pre-binary-point 1 bit, so no need to represent it explicitly (hidden bit)
  - Significand is Fraction with the “1.” restored
- Exponent: excess representation: actual exponent + Bias
  - Ensures exponent is unsigned
  - Single: Bias = 127; Double: Bias = 1023

Single-Precision Range

- Exponents 00000000 and 11111111 reserved
- Smallest value
  - Exponent: 00000001
    $\Rightarrow$ actual exponent = 1 – 127 = –126
  - Fraction: 000…00 $\Rightarrow$ significand = 1.0
  - $\pm 1.0 \times 2^{-126} \approx \pm 1.2 \times 10^{-38}$
- Largest value
  - exponent: 11111110
    $\Rightarrow$ actual exponent = 254 – 127 = +127
  - Fraction: 111…11 $\Rightarrow$ significand $\approx$ 2.0
  - $\pm 2.0 \times 2^{+127} \approx \pm 3.4 \times 10^{+38}$

Double-Precision Range

- Exponents 0000…00 and 1111…11 reserved
- Smallest value
  - Exponent: 00000000001
    $\Rightarrow$ actual exponent = 1 – 1023 = –1022
  - Fraction: 000…00 $\Rightarrow$ significand = 1.0
  - $\pm 1.0 \times 2^{-1022} \approx \pm 2.2 \times 10^{-308}$
- Largest value
  - Exponent: 11111111110
    $\Rightarrow$ actual exponent = 2046 – 1023 = +1023
  - Fraction: 111…11 $\Rightarrow$ significand $\approx$ 2.0
  - $\pm 2.0 \times 2^{+1023} \approx \pm 1.8 \times 10^{+308}$

Floating-Point Precision

- Relative precision
  - all fraction bits are significant
  - Single: approx 2^{-23}
    - Equivalent to $23 \times \log_{10}2 \approx 23 \times 0.3 \approx$ 6 decimal digits of precision
  - Double: approx 2^{-52}
    - Equivalent to $52 \times \log_{10}2 \approx 52 \times 0.3 \approx$ 16 decimal digits of precision

Floating-Point Example

- Represent –0.75
  - $-0.75 = (-1)^1 \times 1.1_2 \times 2^{-1}$
  - S = 1
  - Fraction = $1000\ldots00_2$
  - Exponent = –1 + Bias
    - Single: –1 + 127 = 126 = 01111110_2
    - Double: –1 + 1023 = 1022 = 01111111110_2
- Single: 10111111101000…00
- Double: 10111111111101000…00

Floating-Point Example

- What number is represented by the single-precision float 11000000101000…00
  - S = 1
  - Fraction = $01000\ldots00_2$
  - Fxponent = $10000001_2 = 129$
- $x = (-1)^1 \times (1 + 01_2) \times 2^{(129 - 127)}$

  $= (-1) \times 1.25 \times 2^2$

  $= -5.0$

Denormal Numbers

- Exponent = 000…0 ⇒ hidden bit is 0
- Smaller than normal numbers
  - allow for gradual underflow, with diminishing precision
- Denormal with fraction = 000…0

Denormal Numbers

- float f4=0.25;
- double x=1;
- int shift=126;
- for(i=1;i<=shift;i++)
- x= x*2;
- f4=f4/x;
- Observe f4 with different shift values (131 140 148)
- Conclude: in this case, exp=0000 0000, Fraction is a denormal number and without hidden bit 1.

Infinities and NaNs

- Exponent = 111…1, Fraction = 000…0
  - ±Infinity
  - Can be used in subsequent calculations, avoiding need for overflow check
- Exponent = 111…1, Fraction ≠ 000…0
  - Not-a-Number (NaN)
  - Indicates illegal or undefined result
    - e.g., 0.0 / 0.0
  - Can be used in subsequent calculations

- INF
- float f4=0.25;
- f4=f4/0.0;

- NaNs
- f4=+0.0/0;

- Inaccurate representation of real number
  - integer 1 2 3 4 5 ...
  - max integer 1.11111...1 * 2^(254/2047-bias)
  - 0.8
  - 0.1

Floating-Point Addition

- Consider a 4-digit decimal example
  - $9.999 \times 10^{1} + 1.610 \times 10^{-1}$
- 1. Align decimal points
  - Shift number with smaller exponent
  - $9.999 \times 10^{1} + 0.016 \times 10^{1}$
- 2. Add significands
  - $9.999 \times 10^{1} + 0.016 \times 10^{1} = 10.015 \times 10^{1}$
- 3. Normalize result & check for over/underflow
  - 1.0015×10^{2}
- 4. Round and renormalize if necessary
  - 1.002×10^{2}

Floating-Point Addition

- Now consider a 4-digit binary example
  - $1.000_2 \times 2^{-1} + -1.110_2 \times 2^{-2}$ (0.5 + –0.4375)
- 1. Align binary points
  - Shift number with smaller exponent
  - $1.000_2 \times 2^{-1} + -0.111_2 \times 2^{-1}$
- 2. Add significands
  - $1.000_2 \times 2^{-1} + -0.111_2 \times 2^{-}1 = 0.001_2 \times 2^{-1}$
- 3. Normalize result & check for over/underflow
  - $1.000_2 \times 2^{-4}$, with no over/underflow
- 4. Round and renormalize if necessary
  - $1.000_2 \times 2^{-4}$ (no change) = 0.0625

- 0.1+0.2==0.3?

FP Instructions in MIPS

- FP hardware is coprocessor 1
  - Adjunct processor that extends the ISA
- Separate FP registers
  - 32 single-precision: $f0, $f1, … $f31
  - Paired for double-precision: $f0/$f1, $f2/$f3, …
    - Release 2 of MIPs ISA supports 32 × 64-bit FP reg's
- FP instructions operate only on FP registers
  - Programs generally don't do integer ops on FP data, or vice versa
  - More registers with minimal code-size impact
- FP load and store instructions
  - `lwc1`, `ldc1`, `swc1`, `sdc1`
    - e.g., `ldc1 $f8, 32($sp)`

FP Instructions in MIPS

- Single-precision arithmetic
  - `add.s`, `sub.s`, `mul.s`, `div.s`
    - e.g., `add.s $f0, $f1, $f6`
- Double-precision arithmetic
  - `add.d`, `sub.d`, `mul.d`, `div.d`
    - e.g., `mul.d $f4, $f4, $f6`
- Single- and double-precision comparison
  - `c.`*xx*`.s`, `c.`*xx*`.d` (*xx* is `eq`, `lt`, `le`, …)
  - Sets or clears FP condition-code bit
    - e.g. `c.lt.s $f3, $f4`
- Branch on FP condition code true or false
  - `bc1t`, `bc1f`
    - e.g., `bc1t TargetLabel`

FP Example: °F to °C

- C code:

```
float f2c (float fahr) {
  return ((5.0/9.0)*(fahr - 32.0));
}
```

  - `fahr` in $f12, result in $f0, literals in global memory space
- Compiled MIPS code:

```
f2c: lwc1  $f16, const5($gp)
     lwc2  $f18, const9($gp)
     div.s $f16, $f16, $f18
     lwc1  $f18, const32($gp)
     sub.s $f18, $f12, $f18
     mul.s $f0,  $f16, $f18
     jr    $ra
```

Accurate Arithmetic

- IEEE Std 754 specifies additional rounding control
  - Extra bits of precision (guard, round, sticky)
  - Choice of rounding modes
  - Allows programmer to fine-tune numerical behavior of a computation
- Not all FP units implement all options
  - Most programming languages and FP libraries just use defaults
- Trade-off between hardware complexity, performance, and market requirements

Right Shift and Division

- Left shift by *i* places multiplies an integer by 2^i
- Right shift divides by 2^i?
  - Only for unsigned integers
- For signed integers
  - Arithmetic right shift: replicate the sign bit
  - e.g., –5 / 4
    - 11111011_2 >> 2 = 11111110_2 = –2
    - Rounds toward –∞
  - c.f. 11111011_2 >>> 2 = 00111110_2 = +62

Associativity

- Parallel programs may interleave operations in unexpected orders
  - Assumptions of associativity may fail

- Need to validate parallel programs under varying degrees of parallelism

- double f=0.8
- Can computer accurately store 0.8？

Who Cares About FP Accuracy?

- Important for scientific code
  - But for everyday consumer use?
    - “My bank balance is out by 0.0002¢!” ☹
- The Intel Pentium FDIV bug
  - The market expects accuracy
  - See Colwell, *The Pentium Chronicles*

Concluding Remarks

- Bits have no inherent meaning
  - Interpretation depends on the instructions applied
- Computer representations of numbers
  - Finite range and precision
  - Need to account for this in programs

Concluding Remarks

- ISAs support arithmetic
  - Signed and unsigned integers
  - Floating-point approximation to reals
- Bounded range and precision
  - Operations can overflow and underflow
- MIPS ISA
  - Core instructions: 54 most frequently used
    - 100% of SPECINT, 97% of SPECFP
  - Other instructions: less frequent