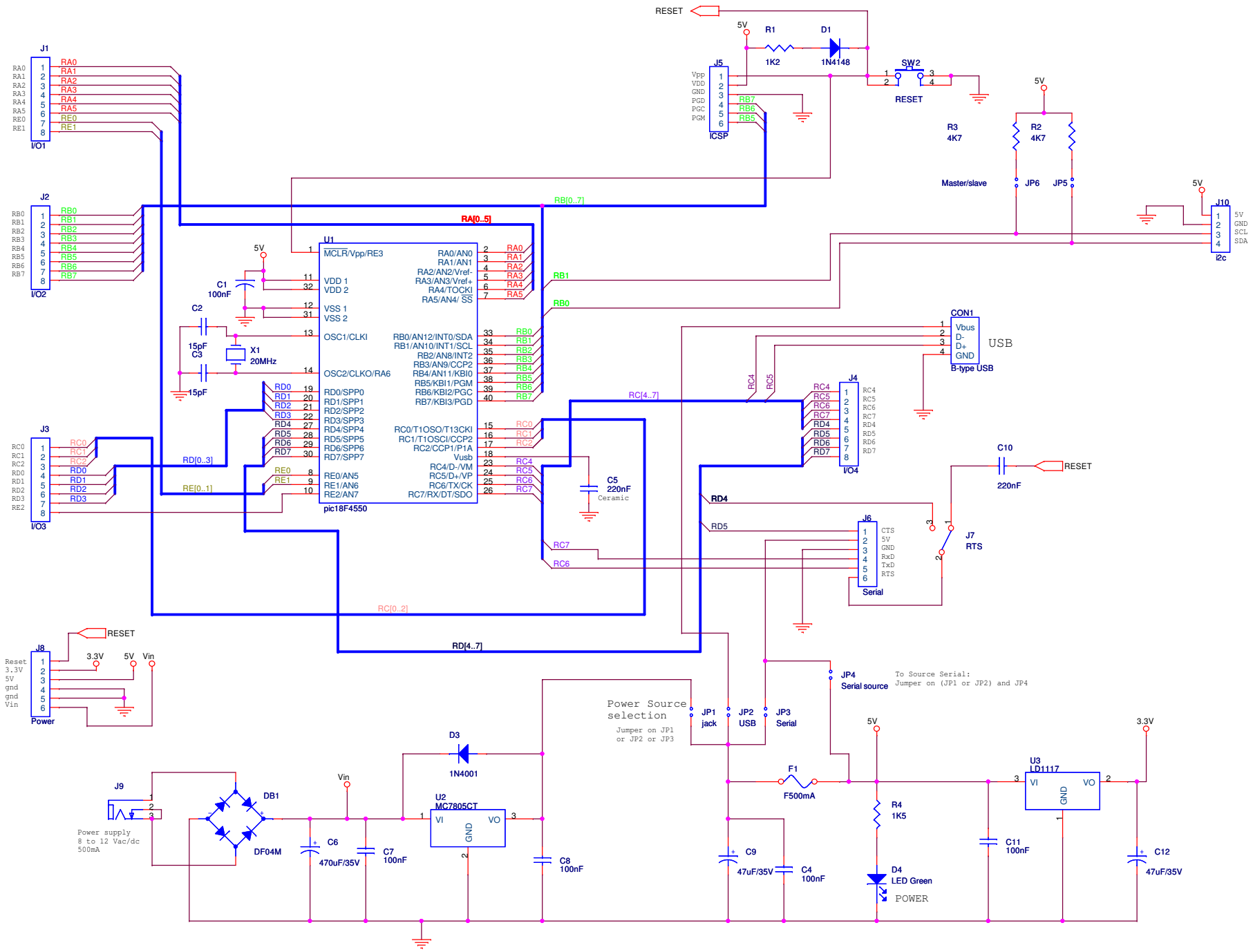

Drawn	Jallib group, Sebastien Lelong & Richard Zengerink
Title	Jaluino Medium Main board
Size A3	Document Number jaluino_medium_v11a.dsn
Rev	1
Date:	Wednesday, September 09, 2009
Sheet	1 of 1