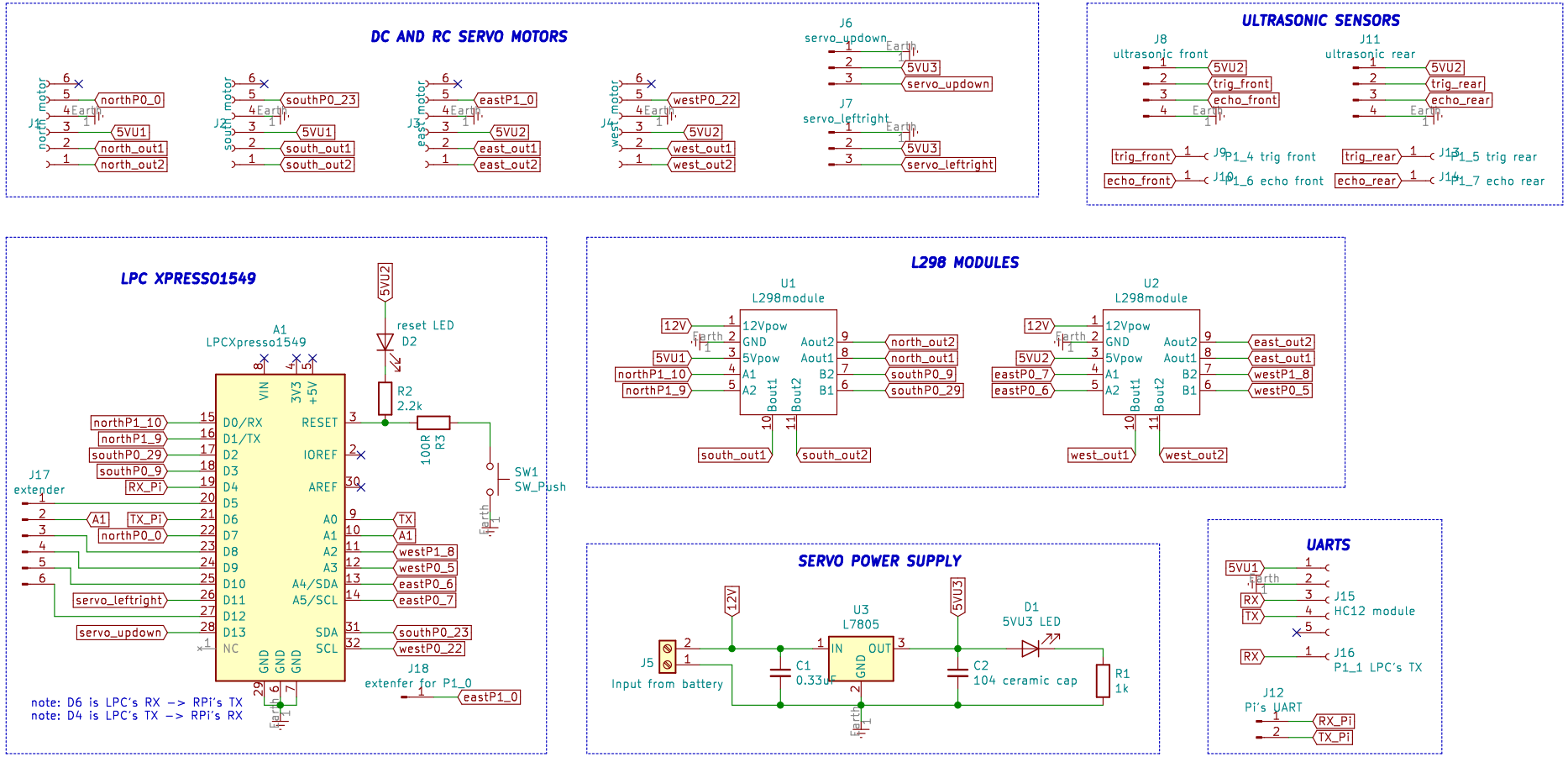

This central board contains mostly headers to connect motors, LPCXpresso board, drivers, etc.

Metropolia UAS

Sheet: /
File: IoTProject.sch

Title: FishSauce IoT Project's Main Board

Size: A4	Date: 01-Dec-2018	Rev: 1
KiCad E.D.A. kicad (5.0.1)-4		Id: 1/1