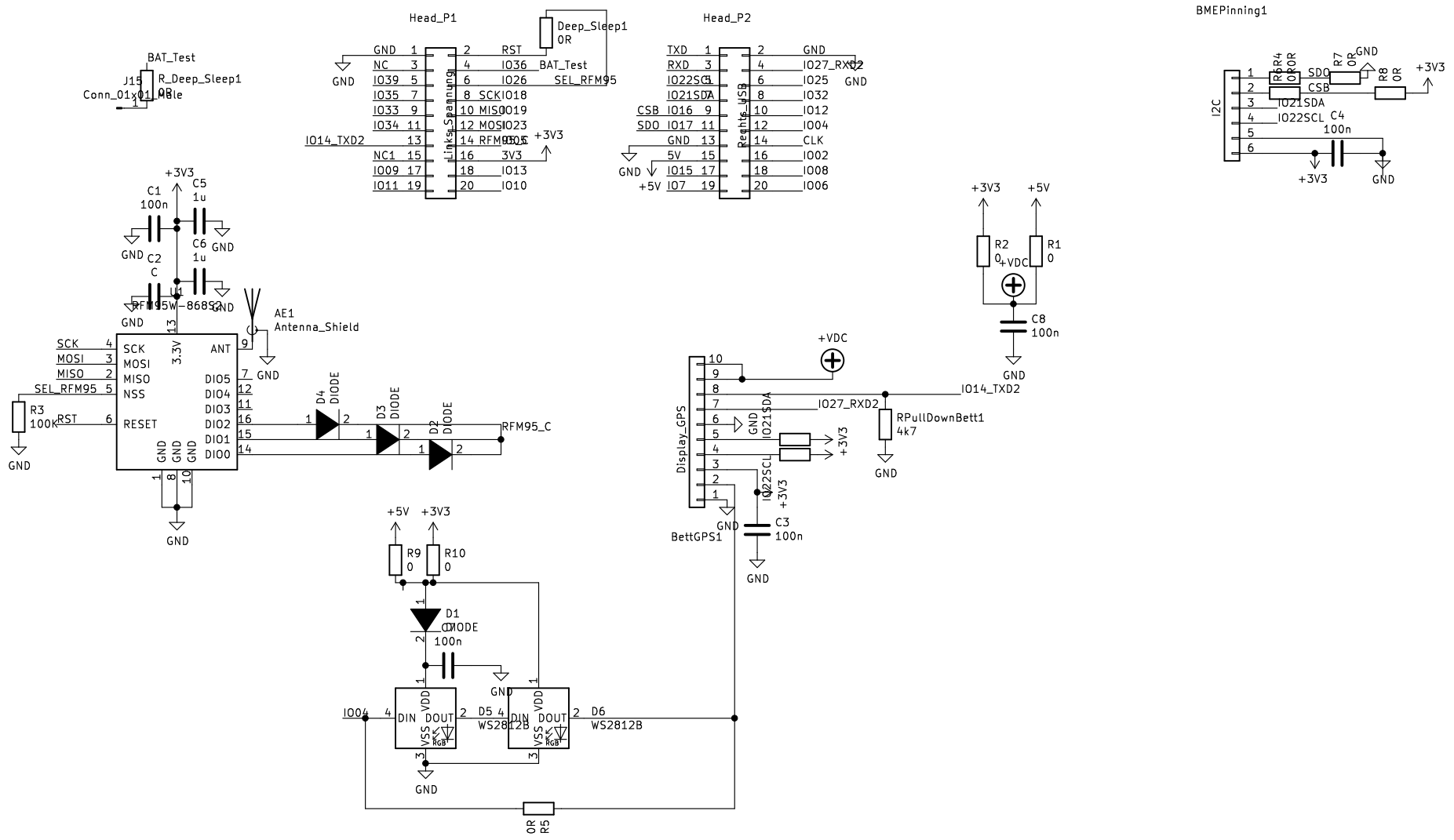
Shield Arduino Pro Mini
Head_P1
Head_P2
BMEPinning1
Links_Spannung
Rechts_USB
Deep_Sleep1
0R
BAT_Test
R_Deep_Sleep1
0R
J15
Conn_01x01_Male
RST
IO36
IO26
SEL_RFM95
SCK
IO18
MISO
IO19
MOSI
IO23
RFM95_C
3V3
IO13
IO10
IO14_TXD2
GND
NC
IO39
IO35
IO33
IO34
NC1
IO09
IO11
TXD
RXD
IO22SCL
IO21SDA
CSB
SDO
IO16
IO17
5V
IO15
IO7
IO27_RXD2
IO25
IO32
IO12
IO04
CLK
IO02
IO08
IO06
+5V
+3V3
SDO
CSB
IO21SDA
IO22SCL
I2C
R6
R4
0R
0R
R7
0R
R8
0R
C4
100n
C1
100n
C5
1u
C6
1u
C2
C
U1
RFM95W-868S2
AE1
Antenna_Shield
SCK
MOSI
MISO
SEL_RFM95
RST
NSS
RESET
3.3V
ANT
DIO5
DIO4
DIO3
DIO2
DIO1
DIO0
R3
100K
D4
DIODE
D3
DIODE
D2
DIODE
RFM95_C
+VDC
R2
0
R1
0
C8
100n
Display_GPS
BettGPS1
IO14_TXD2
IO27_RXD2
IO21SDA
IO22SCL
RPullDownBett1
4k7
C3
100n
R9
0
R10
0
D1
DIODE
100n
IO04
DIN
DOUT
VDD
VSS
RGB
D5
WS2812B
D6
WS2812B
0R
R5
Sheet: /
File: TTGO Mini Hub.sch
Title:
Size: A4
Date: sam. 04 avril 2015
Rev:
KiCad E.D.A. eeschema (5.1.2)-2
Id: 1/1