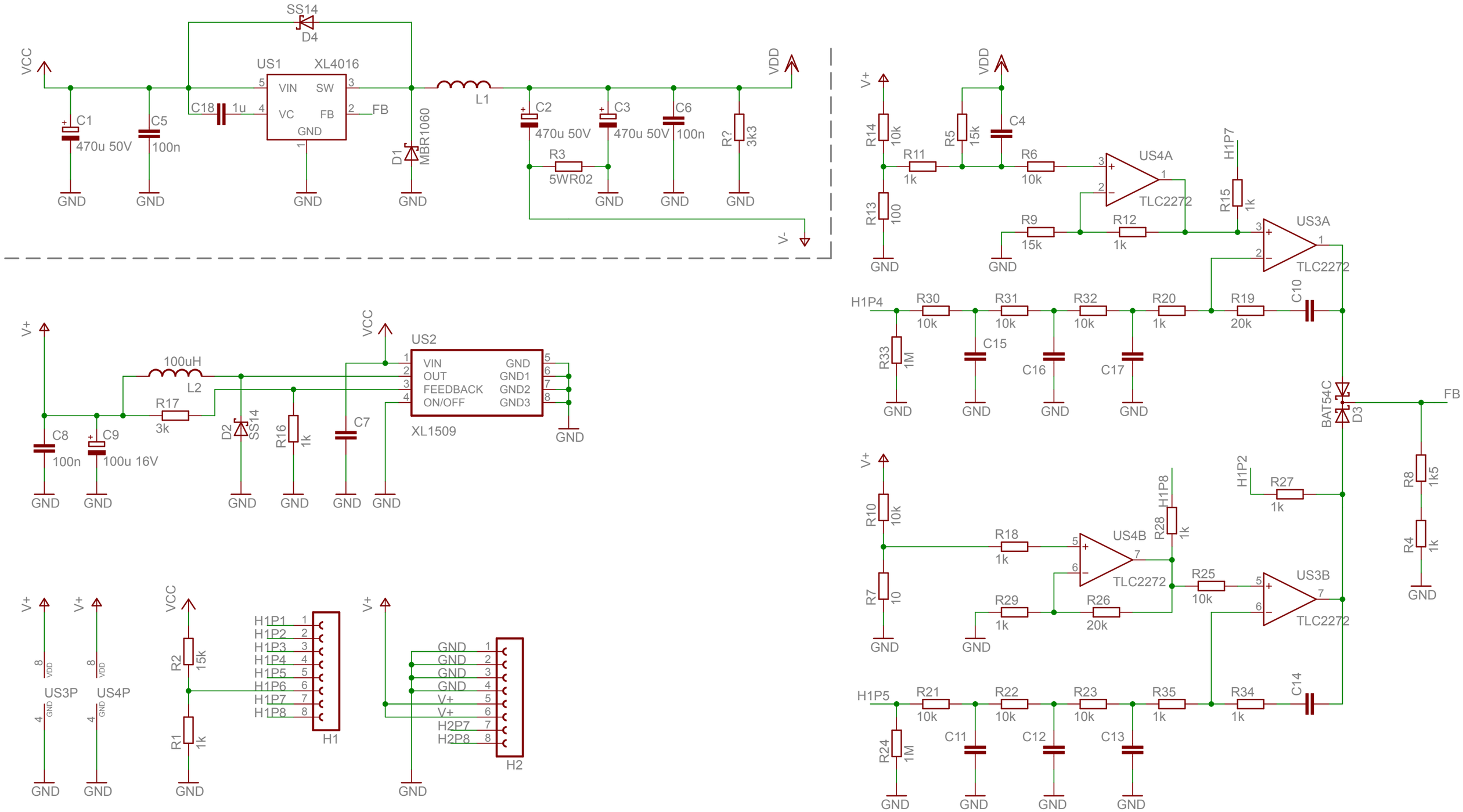
SS14
D4
VCC
US1
XL4016
VIN
SW
VC
FB
GND
C18
1u
FB
C1
470u 50V
C5
100n
D1
MBR1060
L1
C2
470u 50V
C3
470u 50V
C6
100n
R?
3k3
R3
5WR02
VDD
V-
GND
V+
R14
10k
R11
1k
R13
100
R5
15k
C4
R6
10k
US4A
TLC2272
R9
15k
R12
1k
H1P7
R15
1k
US3A
TLC2272
H1P4
R30
10k
R31
10k
R32
10k
R20
1k
R19
20k
C10
R33
1M
C15
C16
C17
BAT54C
D3
FB
R8
1k5
R4
1k
R10
10k
R7
10
R18
1k
US4B
TLC2272
H1P8
R28
1k
H1P2
R27
1k
R25
10k
R29
1k
R26
20k
US3B
TLC2272
H1P5
R21
10k
R22
10k
R23
10k
R35
1k
R34
1k
C14
R24
1M
C11
C12
C13
100uH
L2
R17
3k
C8
100n
C9
100u 16V
D2
SS14
R16
1k
C7
US2
VIN
OUT
FEEDBACK
ON/OFF
GND
GND1
GND2
GND3
XL1509
US3P
US4P
R2
15k
R1
1k
H1
H1P1
H1P2
H1P3
H1P4
H1P5
H1P6
H1P7
H1P8
H2
GND
V+
H2P7
H2P8