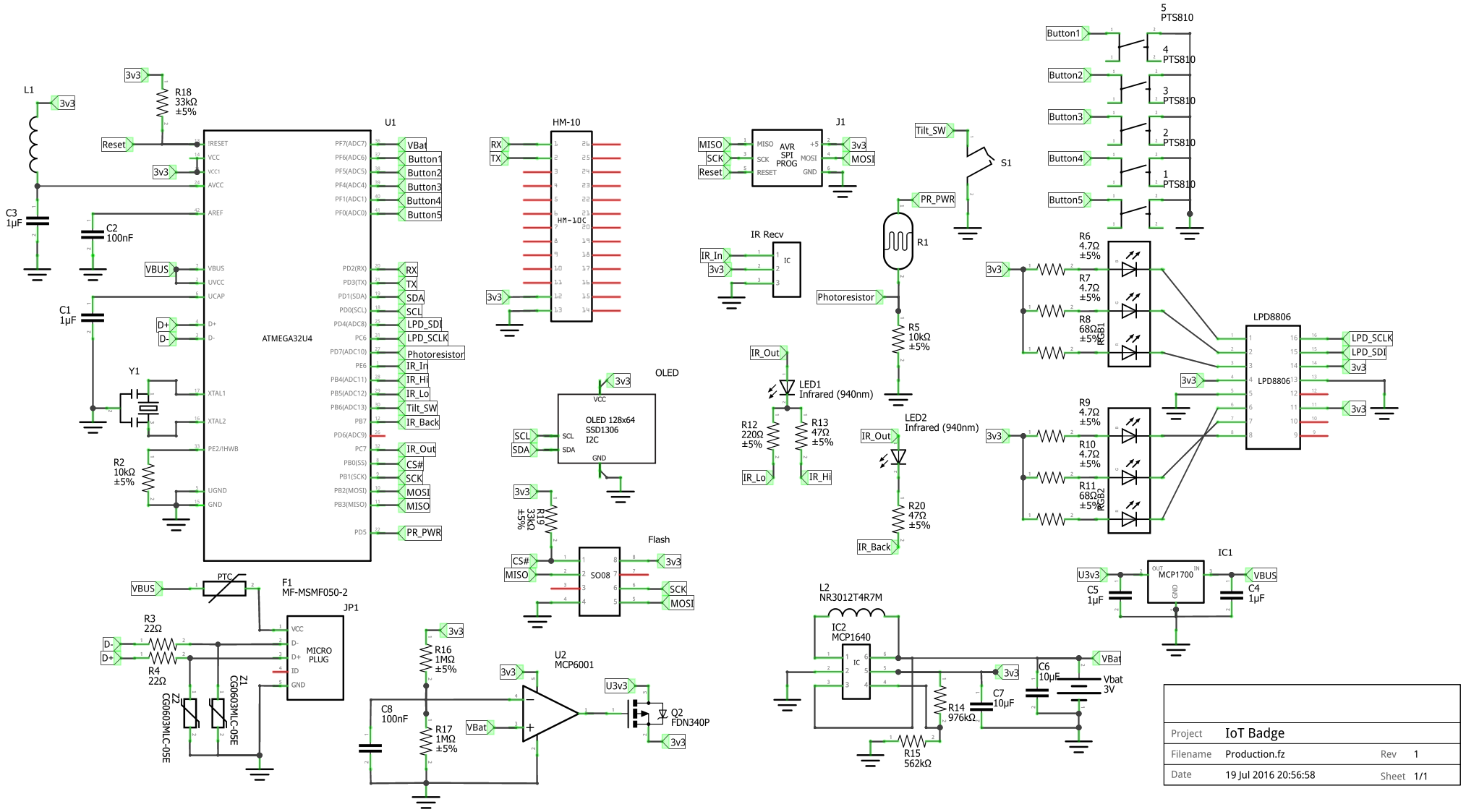

Project	IoT Badge		
Filename	Production.fz	Rev	1
Date	19 Jul 2016 20:56:58	Sheet	1/1

fritzing