Chapter 2: Java OOP I

Xiang Zhang

javacose@qq.com

Content

- OO Concepts
- Class and Objects
  - Package
  - Field
  - Method
  - Main method
  - Object
  - Construct and Initialization
  - Access Control

Object Oriented Programming

- Object
- Class
- Abstraction
  - Design / Implementation
- Inheritance
  - Common / Special
- Polymorphism
  - Method / Behavior

- Example:

People live in houses(Class), and houses usually look like this(abstraction). I have my own house (Object). It is a little special because it is in Georgian style (Inheritance). So you can call it a house or a Georgian house.

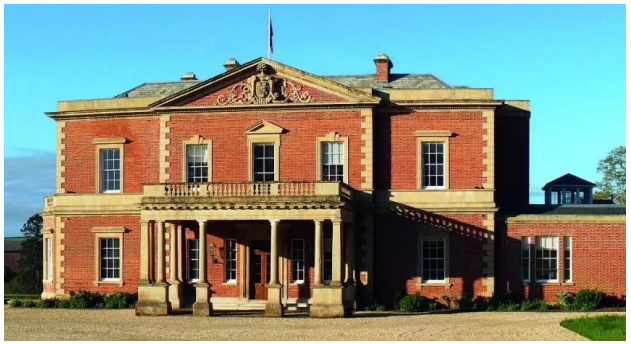

```
House zhang_house = new GeorgianHouse();
```

- Class: concepts that have attributes and behavior

```java
public class Person {
    private String name;
    private int age;
```

- Object: instances that can interact

```java
public static void main(String[] args) {
    Person tom = new Person();
    tom.greet();
```

- Abstraction: design first, implement later

```java
public abstract class AbstractPerson {
    public void greet() {}
}
```

- Inheritance: reuse the code by parent-child classes

```java
public class Student extends Person{
    public void study(Course course) {...}
}
```

- Polymorphism: same method, different behavior

```java
Bird p = new Parrot();
p.fly(SPL, JLH);
p.tweet();
```

Example on Polymorphism


```
public class Bird{
    public void tweet(){System.out.println("Jiu~Jiu~!");}
    public void fly(Place a, Place b){...}
}

public class Parrot extends Bird{
    public void tweet(){System.out.println("Hello!");}
    public void eat() {...}
}

 ......
```

declared type

runtime type / actual type

```
Bird p = new Parrot();
p.fly(JLH, SPL);
p.tweet();
```

```
p.eat();
```

is it correct?

Class and Object

- Class
  - Often describes a hierarchical concepts, such as: Person、Bird、Order
  - A class usually has some attributes and behaviors:
    - Attributes are called Fields, such as the age of a Person
    - Most attributes character the difference between objects, but some attributes are common, such as each Person has two legs, this kind of shared attributes is called Static attributes
    - Behaviors are called Methods, and methods can be static too.
  - IN Java, the hierarchy of classes is a tree
- Object
  - Instances of class. Such as a Person called tom, a octopus called paul…

Class and Objects – Constructing a Class

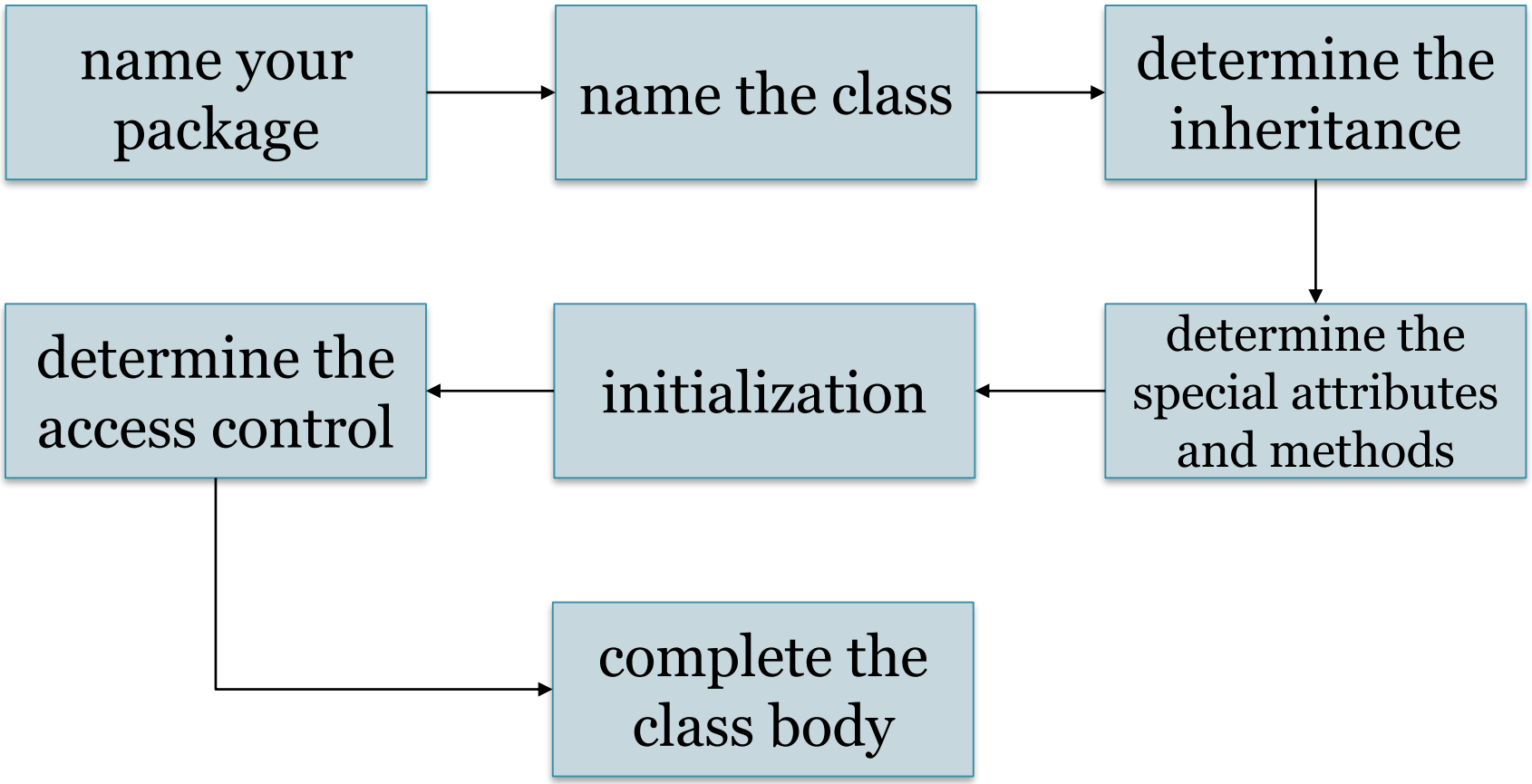

A Simple Class


```
package cn.edu.seu.cose.javacourse.ch02;
public class Person{
    private String name;
    private int age;
    public Person(String name, int age){
        this.name = name;
        this.age = age;
    }
    public void greet(){
        System.out.println("Hello, I am" + name)
            + " , and I am " + age + " years old.";
    }
    public static void main(String[] args){
        Person tom = new Person("Tom", 18);
        tom.greet();
    }
}
```

Is it ok?

Class Components

- Package name/ Class name
- import
- Members
  - Field - static / non-static
  - Method - static / non-static
- Access Modifier(Class / Field / Method)
  - public / abstract / final
  - public / protected / private

Class and Object – Package

- Package is a set of Classes
  - To avoid classes with same names
  - To manage classes
- Define a package
  - package javacourse;
  - package cn.edu.seu.cose.javacourse;
- Import a package or a class
  - import java.io.*;
  - import java.io.File;

Class and Object – Field

- Define a Field
  - Access Modifier
  - Static Modifier (Optional)
  - Type
  - Name

```
public int age;
```

- Non-static

```
public class Person{
    public int age;
}
...
Person tom = new Person();
tom.age = 18;
System.out.println(tom.age);
```

- Static

```
public class Person{
    public static int counter =0;
}
...
Person tom = new Person();
Person.counter++;
System.out.println(Person.counter);
```

Any bugs?

```java
private String name;
private int age;
public static int counter = 0;

public Person(String name, int age){
    this.name = name;
    this.age = age;
    counter++;
}

public void greet(){
    System.out.println("Hello, I am " + name
            + " , and I am " + age + " years old");
}


public static void main(String[] args){
    for(int i=0; i<10; i++){
        Person tom = new Person("Tom", 0);
        tom.greet();
    }
    System.out.println(Person.counter);
}
```

Any bugs?

the correct code

```java
private String name;
private int age;
public static int counter = 0;

public PersonWithFinalize(String name, int age) {
    this.name = name;
    this.age = age;
    counter++;
}

protected void finalize() {
    counter--;
}

public void greet() {
    System.out.println("...");
}

public static void main(String[] args) {
    for(int i=0; i<10; i++) {
        PersonWithFinalize tom = new
                PersonWithFinalize("Tom", 18);
        tom.greet();
    }
    System.out.println(PersonWithFinalize.counter);
}
```

Class and Object – Method

- Define a Method
  - Access Modifier
  - Static Modifier (Optional
  - Return Type
  - Name
  - Parameter List

    (Type + Name)
  - Method Body

```
public class PersonWithHeight {

    public int height;

    public boolean isHigh() {
        if (this.height > 180)
            return true;
        else
            return false;
    }

    public boolean higherThan(PersonWithHeight
            someone) {
        if (this.height > someone.height)
            return true;
        else
            return false;
    }
}
```

Can this method be static ??

Can this method be static ??

Anything wrong with this class?

Class and Object – Method

- Static Method

```
public class Calculator{
    public static int add(int a, int b){
        return a+b;
    }
}
...
System.out.println(Calculator.add(1 + 2));
```

Class and Object – Overloading

- Method Overloading(重载)
  - Method Name
  - Method Signature
    - Method name
    - Number of Parameters
    - Types of Parameters
  - Multiple methods with same name in a class: OK (Overloading)
  - Multiple methods with same signature in a class: No!
  - Signature does not include return type, because signature reflects the specification of behavior, not the result of behavior.

Class and Object – Overloading

- Examples:

```
public String test(String a, int b) {...}
// a method.
public void test(String s, int i) {...}
// Error! Duplicated Methods.
public String test(int a, String b) {...}
// Overloading.
public String test(String a, int b, int c) {...}
// Overloading.
```

Class and Object – Parameters

- Forget them:
  - Formal Parameter?
  - Actual Parameter?
  - Pass by Value?
  - Pass by Reference?

- In Java, the Copy of Parameter is passed.
- What is copied?
  - For primary types, their value is copied
  - For objects, the reference is copied. (What is a reference?)

Class and Object – Parameter

- Try:

```
public class ParameterPassing {
    public static void changeInt(int innerInt){
        innerInt += 10;
    }
    public static void main(String[] args){
        int i = 5;
        ParameterPassing.changeInt(i);
        System.out.println(i);
    }
}
```

Class and Object – Method

- Try again:

```
public class Person {
    public String name;
    public Person(String name){
        this.name = name;
    }
    public static void changeName(Person jerry){
        jerry.name = "Jerry";
        jerry = null;
    }
    public static void main(String[] args){
        Person tom = new Person("Tom");
        Person.changeName(tom);
        System.out.println(tom==null);
        if(tom!=null){
            System.out.println(tom.name);
        }
    }
}
```

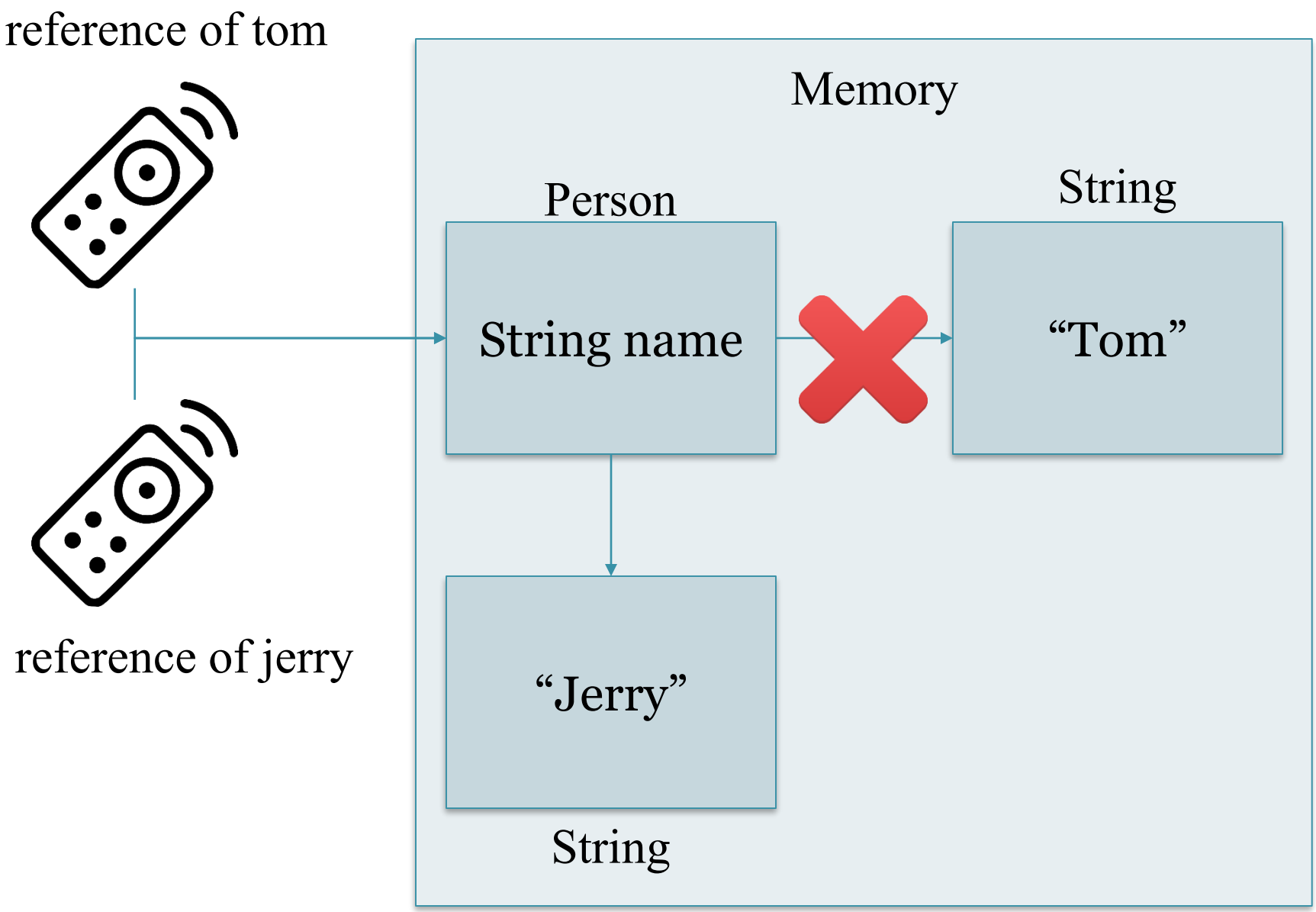
reference of tom
Memory
Person
String
String name
"Tom"
reference of jerry
"Jerry"
String

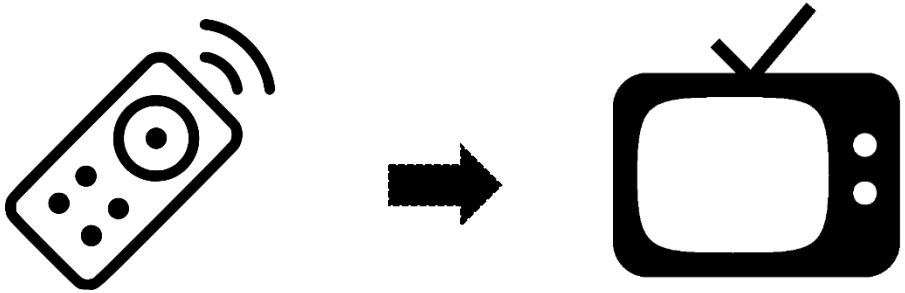

```
Person tom = new Person("Tom");
```

Self-study

- Methods with variable number of parameters

```
public class Calculator{
    public static int add(int ...numbers){
        int result = 0;
        for(int i=0; i<numbers.length; i++){
            result += numbers[i];
        }
        return result;
    }
    public static void main(String[] args){
        System.out.println(Calculator.add(10,11));
        System.out.println(Calculator.add(10,11,12));
    }
}
```

Class and Object – main method

- Each class can have a main method or not
- The main method indicates the entrance of execution
- Each main method looks like this:

```
public static void main(String[] args){
...
}
```

Class and Object – Object

- Declare a reference of an object, but not create it

```
String s;   Person tom;
```

- Declare a reference of an object, and create the object

```
String s = "Hello, World";
String s = new String("Hello, World");
Person tom = new Person("Tom", 18);
```

- Null reference: Person tom = null
- Security: Reference >> Pointer

Self-study

- Storage of Objects
  - Registers - inside the processors
  - Stack - object reference, primary types (栈)
  - Heap – object themselves (堆)
  - Method Area – methods, static data
  - Constant Pool
  - Non-RAM
    - Streamed Object
    - Persistent Object

Class and Object – Object

- Destroying Object
  - Java GC (Garbage Collection)
  - finalize();
  - Try:

```
public static void main(String[] args){
    System.gc();
    System.out.println("Memoery: " + Runtime.getRuntime().freeMemory());
    System.out.println("Creating houses...");
    ArrayList<House> area = new ArrayList<House>();
    for(int i=0; i<10; i++){
        area.add(new House());
    }
    System.out.println("Memoery: " + Runtime.getRuntime().freeMemory());
    System.out.println("Colleting garbage...");
    System.gc();
    System.out.println("Memoery: " + Runtime.getRuntime().freeMemory());
}
```

VM arguments:

-xms100m -Xmx100m

Class and Object – Object

- All classes in Java inherits java.lang.Object
- All objects in Java have following methods:

```
public boolean equals(Object obj)
public int hashCode()
protected Object clone() throws CloneNotSupportedException
public final Class<?> getClass()
protected void finalize() throws Throwable
public String toString()
```

toString()


```
public static void main(String[] args){
        Person tom = new Person("Tom", 0);
        System.out.println(tom);
        tom.greet();
}
```

1) What will happen?
2) How to print the name of Tom?

Lab Work


```
public static void main(String[] args){
        Person tom = new Person("Tom", 0);
        System.out.println(tom);
        tom.greet();
}
```

// output the name of tom

Reference

- Inside The Java Virtual Machine (深入浅出Java虚拟机)

Construction and Initialization

- How to describe the construction of an object in a class?
  - Constructor
    - Default Constructor
    - Constructor with parameters
  - Initialization Block (self-study)

Construction and Initialization

- Constructor
  - Default
  - With Parameters

```
public class Person(){
    public String name;
    public int age;
    public boolean isEducated;
    public Person(){
        this.isEducated = true;
    }
    public Person(String name, int age){
        this();
        this.name = name; this.age = age;
    }
    public Person(String name, int age, boolean isEducated){
        this(name, age);
        this.isEducated = isEducated;
    }
}
```

Self-study

- Initialization Block

```
public class Person{
    public int id;
    public static int counter;
    {
        id = counter++;
    }
    public static void main(String[] args){
        Person tom = new Person();
        Person mike = new Person();
        System.out.println(tom.id);
        System.out.println(mike.id);
    }
}
```

Attention: something is not correct in this code

Self-study

- Static Initialization Block

```
public class Person{
    public int id;
    public static int counter;
    public static int getBeginID(){
        ...   //  Get initial ID from database
    }
    static{
        counter = getBeginID();
    }
    ...
}
```

Self-study

- Think:
  - Why use initialization blocks?
  - What is the difference between initialization blocks and static initialization blocks?

Class and Object – Access Control

- Why Do We Need Access Control?
  - Encapsulation
  - Data Hiding
- Without Access Control:
  - Debugging becomes difficult
  - Data and programs become unsafe

Class and Object – Access Control

- AC Modifier for Classes
  - *default*
  - public
- AC Modifier for Members
  - *default (package)*
  - public
  - private
  - protected

Class and Object – Access Control

	Same class	Same package	Subclass in different package	Non-Subclass in different package
public	OK	OK	OK	OK
protected	OK	OK	OK	NO
default(package)	OK	OK	NO	NO
private	OK	NO	NO	NO

Class and Object – Access Control

- Getter and Setter Methods

```
...
private String name;
private int age;
public String getName() {return name;}
public void setName(String name) {this.name = name;}
public int getAge() {return age;}
public void setAge(int age) {
    if(age>150 || age<0){
        age = 0;
        System.out.println("Wrong age!");
    }else{
        this.age = age;
    }
}
...
```

Self-study

- Data, Information and Knowledge
- Non-structural, semi-structural and structural data
- XML
  - XML and XML Schema
  - XML vs. HTML
  - * Ant

```
<?xml version="1.0" encoding="utf-8"?>
<Person id="x.zhang">
    <firstname>Xiang</firstname>
    <lastname>Zhang</lastname>
    <organization>
        <College id="COSE">
            College of Software Engineering
        </College>
    </organization>
<Person>
```

Forecast

- Abstraction
  - Abstract Class
  - Interface
- Inheritance
- Polymorphism