ME-217

Complex Engineering Problem

Date: 16-12-2025

ME-16-C

Group 1

Sr. No.	Group Members	CMS IDs
1	Uzair Abdullah	504943
2	Salman Ahmed	505038
3	Muhammad Abdullah	508963
4	Haissam Bin Zia	501252
5	Safwan Ahmed	520310

Instructors:

- Dr Waqas Khalid
- Engr Muhammad Hussain

Contents

1.Abstract 3
2.Introduction 3
3. Methodology and Project Parameters 4
3.1. Project Design Parameters 4
3.1.1. Determination of Required Net Power Output 4
3.1.2. Component Efficiency Determination 4
3.1.3. Cycle Operating Pressures and Temperatures 5
3.2. System Modelling and Component Configuration: 5
3.2.1. Cycle Diagram and State Point Identification 5
3.2.2. Two-Stage Turbine and Reheat Process 6
3.2.3. Feedwater Heater Configuration 6
3.3. Assumptions 7
3.4. Governing Equations and EES Implementation 8
3.4.1. Manual Analysis 8
3.4.2. EES Implementation 10
4.Results and Discussion 12
4.1. Analysis Results 12
4.2. Visualization and Optimization 13
5.CEP Application 14
5.1. System Implementation and Load Calculation 14
5.2. Waste Heat Recovery 15
5.3. Finance 16
5.3.1. Cost of Plant Setup 16
5.3.2. Running Cost & Revenue: 16
6.Conclusion 17
7.References 17

1.Abstract

This project presents the design and thermodynamic analysis of an advanced regenerative–reheat Rankine cycle developed to meet a net power output requirement of 50.12 MW. The cycle incorporates a two-stage turbine with reheating, along with one open and one closed feedwater heater, to enhance thermal efficiency and reduce irreversibilities. Detailed energy balances and governing equations are implemented using Engineering Equation Solver (EES) to determine state properties, work outputs, heat interactions, and overall cycle efficiency. The optimized configuration achieves a thermal efficiency of 30.7%, demonstrating a significant improvement over the initial baseline design of 19.54%. Finally, the system is applied to a 50 MW data centre, highlighting its feasibility for modern, high-demand, continuous-load applications and exploring the potential for waste heat recovery to further enhance overall system efficiency

2.Introduction

"Optimizing Rankine Cycle for Modern Power Requirements"

Efficient power generation is fundamental to support our modern infrastructure, from commerce to industry. Our project focuses on improving the classic Rankine thermodynamic cycle which is the backbone of most power plants, to meet today's critical demands for energy efficiency and sustainability.

Our Goal was to design and analyze an advanced Rankine cycle system incorporating **one open feedwater heater, one closed feedwater heater, and two-stage turbine with reheating**. This specific, configuration is targeted to significantly boost the cycle's thermal efficiency and overall performance, making it an ideal, feasible solution for powering a demanding facility like a data centre.

The analysis proceeds in two critical phases:

- We first establish the **ideal cycle performance**, performing detailed thermodynamic calculations to determine the theoretical maximum potential efficiency.
- We then embodied **real-world component efficiencies** (for turbines and pumps) into the analysis. This comprehensive comparison between the ideal and real cycles provides practical, actionable insights into how component performance directly impacts the system's overall operational efficiency.

3. Methodology and Project Parameters

3.1. Project Design Parameters

The thermal design and analysis of the regenerative-reheat Rankine cycle are anchored by specific constraints derived from the group's composition, as mandated by the project brief. These parameters define the required capacity and the component efficiencies for the subsequent calculations of the non-ideal cycle.

3.1.1. Determination of Required Net Power Output

The total required net power output of the plant is calculated using the average of the last three digits of all group members' registration numbers, multiplied by a scaling factor and the Group Number.

$$W_{net,req} = \left(\frac{\sum Last\ 3\ Digits\ of\ Reg.No}{No\ of\ Group\ Members}\right) MW\ \div (10 \times Group\ No)$$

- **Group Number:** 1
- **Required Net Power Output: 50.12 MW**

This value sets the target capacity which the final design must meet, determining the overall mass flow rate required for the plant.

3.1.2. Component Efficiency Determination

The isentropic efficiencies for the major components are fixed using the remaining digits of the group members' registration numbers. These efficiencies will be used solely for the analysis of the **Non-Ideal Cycle** (Section 5.2).

- **Pump Isentropic Efficiency:** Calculated using the last two digits of the 1st group member's registration number.
    - **Value:** 57%
- **Turbine I (HP) Isentropic Efficiency:** Calculated using the average of the last 2 digits of 2nd and 3rd group members.
    - **Value:** 63.5%
- **Turbine II (LP) Isentropic Efficiency:** Calculated using the average of the last 2 digits of 4th and 5th group members.
    - **Value:** 55%

3.1.3. Cycle Operating Pressures and Temperatures

Based on common industrial practice and to ensure saturated liquid at the condenser outlet, the following parameters are fixed for the analysis of both cycles. The Reheat and Feedwater Heater (FWH) pressures are crucial design variables selected to optimize the cycle's thermal efficiency.

Parameter	**Symbol**	**Chosen Value**
Max Boiler Pressure	P_{max}	16 MPa
Max Steam Temperature	T_{max}	625 C
Condenser Pressure	P_{cond}	8 kPa
Reheat Pressure	P_{reheat}	615 C
Closed FWH Extraction Pressure	$P_{ext,1}$	3.8 MPa
Open FWH Extraction Pressure	$P_{ext,2}$	0.6 MPa

3.2. System Modelling and Component Configuration:

The plant design is based on a complex Rankine cycle featuring two-stage expansion with reheating and two stages of regenerative feedwater heating. This configuration maximizes thermal efficiency while mitigating high-moisture content in the final turbine stages.

3.2.1. Cycle Diagram and State Point Identification

The system comprises 13 distinct state points, tracing the thermodynamic path of the working fluid (steam) through all components.

The state points and their corresponding locations in the cycle are defined as follows:

State	Process
State 1-2	Compression, Pump 1
State 2-3	Open Feed Water Heater, Heat Exchange
State 3-4	Compression, Pump 2
State 4-5,4-6	Closed Feed Water Heater, Heat Exchange
State 6-7	Compression, Pump 3
State 5-8,7-8	Streams Mixed in Mixing Chamber
State 8-9	Heat Addition in Boiler
State 9-10	High Pressure Turbine, Expansion
State 10-11	Reheater(Reheating)
State 11-12	Low Pressure Turbine, Expansion (Stream 1)
State 12-13	Low Pressure Turbine, Expansion (Stream 2)
State 13-1	Heat Rejection in Condensor

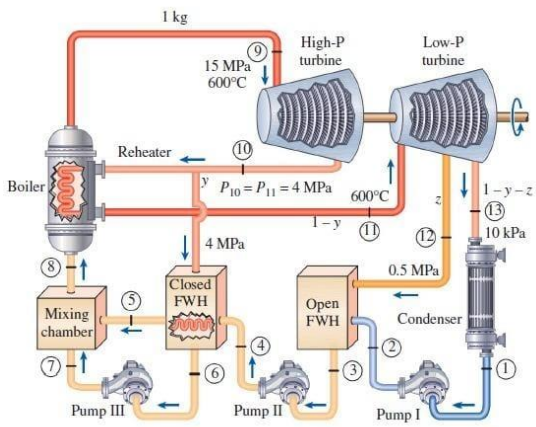

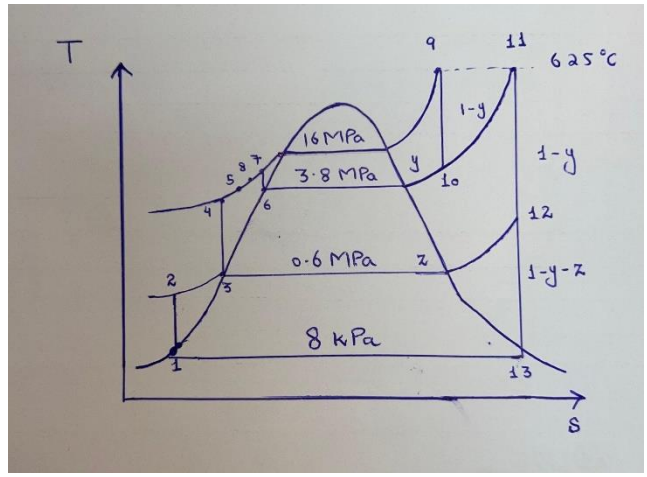

3.2.2. Two-Stage Turbine and Reheat Process

The turbine is divided into two sections: High Pressure (HP) and Low Pressure (LP).

- **HP Turbine (State 9 to State 10):** High-pressure steam expands to the reheat pressure . The extraction stream is tapped from this stage, typically just before the steam enters the reheater or from the LP turbine inlet, to feed the Closed FWH.
- **Reheater (State 10 to State 11):** The remaining steam mass flow returns to the boiler to be reheated back to the maximum cycle temperature isobarically. This significantly increases the average temperature of heat addition and reduces the moisture content at the LP turbine exit.
- **LP Turbine (State 11 to State 12 and State 12 to 13):** The reheated steam expands through the LP turbine. An additional fraction of steam is extracted from an intermediate stage to supply the Open FWH.

3.2.3. Feedwater Heater Configuration

The project requires a configuration utilizing one closed and one open feedwater heater (FWH) to maximize the average temperature of heat addition and optimize system efficiency.

- **Closed Feedwater Heater (FWH1):** This is a shell-and-tube heat exchanger.
    - **Extraction Stream:** Steam mass flow condenses as it heats the main feedwater line.
- **Open Feedwater Heater (FWH2, Deaerator):** This is a direct-contact mixing chamber.

- **Extraction Stream:** Steam mass flow mixes directly with the incoming feedwater.
- **Primary Function:** This component is critical as it acts as a **deaerator**, removing non-condensable gases (like oxygen) from the feedwater to prevent boiler corrosion.
- **Exit Condition:** The combined mass flow leaves as saturated liquid at the extraction pressure.

3.3. Assumptions

1) Steady-Flow Assumptions

It is assumed that all components (boiler, turbines, pumps, condenser, feedwater heaters, mixing chambers) operate under steady-state and steady-flow conditions. All thermodynamic properties and mass flow rates remain constant with time.

2) Working Fluid as Pure Water / Steam

The working fluid throughout the cycle is assumed to be pure water and steam.
Thermodynamic properties are obtained from:

- Table A-5, Cengel Book (saturated water)
- Table A-6, Cengel Book (Superheated water)
- IAPWS values

IAPWS values (for states not included in Cengel), used in states such as 9 and 10, 11 also 3.8 MPa was not available.

3) Negligible Kinetic and Potential Energy Changes

Changes in kinetic and potential energy of the fluid within the components are assumed to be negligible compared to the changes in enthalpy, which are quite large

4) Constant Pressure in Boiler, Reheater, and Condenser

It is assumed that there are no pressure losses in the boiler, reheater, and condenser. Heat addition and heat rejection occur at constant pressure.

5) Ideal Mixing in Open/Closed Feedwater Heater

The open and closed feedwater heater undergo ideal mixing. This means:

- No heat is lost to surroundings
- Mixing occurs at constant pressure.

- Energy transfers ideally until equilibrium is reached.

6) Fluid Leaves Closed FWH as Saturated Liquid

It is assumed that the fluid (condensate) leaves the closed feedwater heater as a saturated liquid. The liquid pressure leaving the heater is equal to the pressure of the heater leading to the mixing point.

7) Pumps and Turbines are Internally Irreversible but Adiabatic

All turbines and pumps are assumed to be internally irreversible due to the use of isentropic efficiencies. The process occurring within the turbines and pumps is totally adiabatic, meaning there are no heat losses. Pressure losses are considered

8) Fluid Leaves the Condenser as Saturated Liquid

At the condenser pressure, heat is rejected until the fluid reaches the saturated liquid state. The enthalpy h_1 is treated as $h_{f@8KPa}$ So it reaches the same inlet state 1.

9) Steam Quality is Acceptable at Turbine Exhaust

The steam quality at the turbine exhaust was almost 89%, which is considered acceptable to enter the condenser. Moisture losses were neglected, as there is no excessive moisture going into the condenser.

10) Mass Flow Rate Adjusted for Power

Mass flow rate is adjusted to meet the required power output. The flow rate came out to be approximately 56.6kg/s which is pretty nice for 50.12MW powerplant.

11) No Pressure and Heat Losses in Piping

It is assumed that there are no pressure and heat losses in components such as pipes, valves, and feedwater heaters. Pressures are considered equal at component interfaces.

3.4. Governing Equations and EES Implementation

3.4.1. Manual Analysis

Ideal Cycle:

State 1: (Saturated Liquid)

$$h_1 = h_{f@\,8kPa} = 173.362\ kJ/kg$$
$$v_1 = v_{f@\,8kPa} = 0.0010084\ m^3/kg$$

State 2: (Compressed Liquid)

$$w_{pump,1} = v_1(P_2 - P_1) = 0.0010084(600 - 8)$$
$$w_{pump,1} = 0.5969\ kJ/kg$$
$$w_{pump,1} + h_1 = h_2$$
$$h_2 = 173.9589\ kJ/kg$$

State 3: (Saturated Liquid)

$$h_3 = h_{f@\,600kPa} = 670.38\ kJ/kg$$
$$v_3 = v_{f@\,600kPa} = 0.001101\ m^3/kg$$

State 4: (Compressed Liquid)

$$w_{pump,2} = v_3(P_4 - P_3) = 0.001101(3800 - 600)$$
$$w_{pump,2} = 3.5232\ kJ/kg$$
$$w_{pump,2} + h_3 = h_4$$
$$h_4 = 673.9032\ kJ/kg$$

State 5: (Saturated Liquid)

$$h_5 = h_{f@\,3800kPa} = 1072.32\ kJ/kg$$

State 6: (Saturated Liquid)

$$h_6 = h_{f@\,3800kPa} = 1072.32\ kJ/kg$$
$$v_6 = v_{f@\,3800kPa} = 0.0012452\ m^3/kg$$

State 7: (Compressed Liquid)

$$w_{pump,3} = v_6(P_7 - P_6) = 0.0012452(16000 - 3800)$$
$$w_{pump,3} = 15.1914\ kJ/kg$$
$$w_{pump,3} + h_6 = h_7$$
$$h_7 = 1087.5114\ kJ/kg$$

State 9: (Superheated Steam)

$$P_9 = 16\ MPa$$
$$T_9 = 625\ C$$
$$h_9 = 3640\ kJ/kg$$
$$s_9 = 6.716\frac{kJ}{kg \times K}$$

State 10: (Superheated Steam)

$$P_{10} = 3.8\ MPa$$
$$h_{10} = 3163\ kJ/kg$$
$$s_{10} = s_9 = 6.716\frac{kJ}{kg \times K}$$

State 11: (Superheated Steam)

$$P_{11} = 3.8\ MPa$$
$$T_{11} = 615\ C$$
$$h_{11} = 3711\ kJ/kg$$
$$s_{11} = 7.435\frac{kJ}{kg \times K}$$

State 12: (Superheated Steam)

$$P_{12} = 0.6\ MPa$$
$$T_{12} = 317\ C$$
$$h_{12} = 3097\ kJ/kg$$
$$s_{12} = 7.435\frac{kJ}{kg \times K}$$

State 13: (Saturated Mixture)

$$P_{13} = 8\ kPa$$
$$h_{13} = 2327\ kJ/kg$$
$$s_{13} = 7.435\frac{kJ}{kg \times K}$$
$$x_{13} = 0.89$$

Fractions extracted:

Applying energy balance on Closed FWH:

$$y = \frac{h_5 - h_4}{h_{10} - h_4 - h_6 + h_5} = \frac{1072.32 - 673.9}{3163 - 673.9 - 1073.32 + 1073.32}$$
$$\mathbf{y = 0.16}$$

Applying energy balance on open FWH:

$$z = \frac{h_3 - yh_3 - h_2 + yh_2}{h_{12} - h_1} = \frac{670.38 - (0.16)(670.38) - 173.95 + (0.16)(173.95)}{3097 - 173.362}$$
$$\mathbf{z = 0.1426}$$

State 8:

Energy balance on Mixing Chamber:

$$E_{in} = E_{out}$$
$$h_8 = yh_7 + (1 - y)h_5 = (0.16)(1087.5) + (1 - 0.16)(1072.32)$$
$$h_8 = 1074.56\ kJ/kg$$

$$q_{in} = (h_9 - h_8) + (1 - y)(h_{11} - h_{10})$$
$$\mathbf{q_{in} = 3025.76\ kJ/kg}$$

$$q_{out} = (1 - y - z)(h_{13} - h_1)$$
$$\mathbf{q_{out} = 1501.94\ kJ/kg}$$

Work input and output:

$$w_{pump,isen,total} = (1 - y - z)(w_{pump,1}) + (1 - y)(w_{pump,2}) + y(w_{pump,3})$$
$$\mathbf{w_{pump,isen,total} = 5.8063\ kJ/kg}$$

$$w_{turb,isen,total} = (h_9 - h_{10}) + (1 - y)(h_{11} - h_{12}) + (1 - y - z)(h_{12} - h_{13})$$
$$\mathbf{w_{turb,isen,total} = 1529.758\ kJ/kg}$$

$$w_{net} = w_{turb} - w_{pump} = 1529.758 - 5.8063$$
$$\mathbf{w_{net} = 1523.9517\ kJ/kg}$$

Thermal Efficiency:

$$\eta_{th} = \frac{w_{net}}{q_{in}} = \frac{1523.9517}{3025.76}$$
$$\mathbf{\eta_{th} = 50.37\ \%}$$

Actual Cycle:

States 1, 3, 5, 6, 9, and 11 will remain the same. However, calculations for remaining states are as follows:

$$\eta_{pumps} = 57\%$$
$$\eta_{HP\ turbine} = 63.5\%$$
$$\eta_{LP\ turbine} = 55\%$$

Turbine Actual Works:

High pressure turbine:

$$w_{act,turb,HP} = (\eta_{HP\ turbine})(h_9 - h_{10})$$
$$w_{act,turb,HP} = (0.635)(3640 - 3163)$$
$$\mathbf{w_{act,turb,HP} = 302.895\ kJ/kg}$$

Low Pressure Turbine Stage 1:

$$w_{act,turb,LP} = (\eta_{LP\ turbine})(h_{11} - h_{12})$$
$$w_{act,turb,LP} = (0.55)(3711 - 3097)$$
$$\mathbf{w_{act,turb,LP} = 337.7\ kJ/kg}$$

Low Pressure Turbine Stage 2:

$$w_{act,turb,LP} = (\eta_{LP\ turbine})(h_{12} - h_{13})$$
$$w_{act,turb,LP} = (0.55)(3097 - 2327)$$
$$\mathbf{w_{act,turb,LP} = 423.5\ kJ/kg}$$

State 2:

$$w_{act,pump,1} = \frac{w_{isen,pump,1}}{\eta_{pump}} = \frac{0.5969}{0.57}$$
$$w_{act,pump,1} = 1.0472\ kJ/kg$$
$$w_{act,pump,1} + h_1 = h_{2a}$$
$$\mathbf{h_{2a} = 174.4091\ kJ/kg}$$

State 4:

$$w_{act,pump,2} = \frac{w_{isen,pump,2}}{\eta_{pump}} = \frac{3.5232}{0.57}$$
$$w_{act,pump,2} = 6.1810\ kJ/kg$$
$$w_{act,pump,2} + h_3 = h_{4a}$$
$$\mathbf{h_{4a} = 676.56\ kJ/kg}$$

State 7:

$$w_{act,pump,3} = \frac{w_{isen,pump,3}}{\eta_{pump}} = \frac{15.1914}{0.57}$$
$$w_{act,pump,3} = 26.6515\ kJ/kg$$
$$w_{act,pump,3} + h_6 = h_{7a}$$
$$\mathbf{h_{7a} = 1098.9715\ kJ/kg}$$

State 10:

$$w_{act,turb,HP} = h_9 - h_{10a}$$
$$h_{10a} = h_9 - w_{act,turb,HP}$$
$$\mathbf{h_{10a} = 3337.105\ kJ/kg}$$

State 12:

$$w_{act,turb,LP,1} = h_{11} - h_{12a}$$
$$h_{12a} = h_{11} - w_{act,turb,LP,1}$$
$$\mathbf{h_{12a} = 3373.3\ kJ/kg}$$

State 13:

$$w_{act,turb,LP,2} = h_{12a} - h_{13a}$$
$$h_{13a} = h_{12a} - w_{act,turb,LP,2}$$
$$\mathbf{h_{13a} = 2949.8\ kJ/kg}$$

Fractions Extracted:

Applying energy balance on Closed FWH:

$$y = \frac{h_5 - h_4}{h_{10} - h_4 - h_6 + h_5} = \frac{1072.32 - 676.56}{3337.105 - 676.56 - 1073.32 + 1073.32}$$
$$\mathbf{y = 0.14875}$$

Applying energy balance on open FWH:

$$z = \frac{h_3 - yh_3 - h_2 + yh_2}{h_{12} - h_1} = \frac{670.38 - (0.14875)(670.38) - 174.4 + (0.14875)(174.4)}{3373.3 - 173.362}$$
$$\mathbf{z = 0.1319}$$

State 8:

Energy Balance on Mixing Chamber:

$$E_{in} = E_{out}$$
$$h_8 = yh_7 + (1 - y)h_5 = (0.14875)(1098.9715) + (1 - 0.14875)(1072.32)$$
$$h_8 = 1076.28\ kJ/kg$$

Work input and output:

$$w_{pump,act,total} = (1 - y - z)(w_{pump,1}) + (1 - y)(w_{pump,2}) + y(w_{pump,3})$$
$$\mathbf{w_{pump,act,total} = 9.979\ kJ/kg}$$
$$w_{turb,isen,total} = (h_9 - h_{10}) + (1 - y)(h_{11} - h_{12}) + (1 - y - z)(h_{12} - h_{13})$$
$$\mathbf{w_{turb,isen,total} = 895\ kJ/kg}$$

$$w_{net} = w_{turb} - w_{pump} = 895 - 9.979$$
$$\mathbf{w_{net} = 885.027\ kJ/kg}$$

$$q_{in} = (h_0 - h_8) + (1 - y)(h_{11} - h_{10})$$
$$\mathbf{q_{in} = 2881.998\ kJ/kg}$$

$$q_{out} = (1 - y - z)(h_{13} - h_1)$$
$$\mathbf{q_{out} = 1997.23\ kJ/kg}$$

Thermal Efficiency:

$$\eta_{th} = \frac{w_{net}}{q_{in}} = \frac{885.027}{2881.998}$$
$$\boldsymbol{\eta_{th} = 30.70\ \%}$$

Mass Flow Rate:

$$m = \frac{\dot{W}_{net}}{w_{net}} = \frac{50120}{885.027}$$
$$\mathbf{m = 56.63\ kg/s}$$

3.4.2. EES Implementation

The **Engineering Equation Solver (EES)** was utilized as the primary tool for detailed system modeling and optimization.

- **Property Determination**: EES was used to determine the thermodynamic state properties (enthalpy, entropy, temperature, and pressure) at all 13 points of the cycle using integrated IAPWS and steam property libraries.
- **Modeling Approach**: The code implements mass and energy balance equations for each component, including the boiler, reheater, condenser, turbines, pumps, and both feedwater heaters.
- **Optimization via EES**: The software allowed for a comparative analysis between the initial design and the optimized configuration. By varying input parameters like reheat temperature and condenser pressure within EES, the team successfully increased the cycle efficiency to 30.7%.
- **Mass Flow Scaling**: The software automatically adjusted the mass flow rate to match the required net power output.

```
"Given Parameters"
T_max = 625 [C]
T_reheat = 615 [C]
Pump_eff = 0.57
Turb_highP_eff = 0.635
Turb_lowP_eff = 0.55
Power = 50120

"State (1)"
P_1 = 8 [kpa]
x_1 = 0
h_1=enthalpy(Water,x=x_1,P=P_1)
s_1=entropy(Water,x=x_1,P=P_1)
T_sat1=t_sat(Water,P=P_1)
v_1=volume(Water,P=P_1,x=x_1)

"State (2)"
P_2 = 600 [kpa]
W_p1 = (v_1*(P_2-P_1))/Pump_eff
h_2 = h_1 + W_p1
s_2= s_1
T_2 = temperature(Water,P=P_2,s=s_2)

"State (3)"
P_3 = P_2
x_3 = 0
h_3 =enthalpy(Water,x=x_3,P=P_3)
s_3 =entropy(Water,x=x_3,P=P_3)
T_sat3 =t_sat(Water,P=P_3)
v_3 =volume(Water,P=P_3,x=x_3)

"State (4)"
 P_4 = 3800 [kpa]
W_p2 = (v_3*(P_4-P_3))/Pump_eff
h_4 = h_3 + W_p2
s_4 = s_3
T_4 = temperature(Water,P=P_4,s=s_3)

"State (5)"
P_5 = P_4
x_5 = 0
h_5 = enthalpy(Water,x=x_5,P=P_5)
s_5 =entropy(Water,x=x_5,P=P_5)

"State (6)"
P_6 = P_5
x_6 = 0
T_sat6 = t_sat(Water,P=P_6)
h_6 = enthalpy(Water,x=x_6,P=P_6)
v_6 =volume(Water,P=P_6,x=x_6)
s_6 = entropy(Water,x=x_6,P=P_6)

"State (7)"
P_7 = 16000 [kpa]
s_7 = s_6
W_p3 = (v_6*(P_7-P_6))/Pump_eff
h_7 = h_6 + W_p3
T_7=temperature(Water,P=P_7,s=s_7)

"State (8)"
P_8 = P_7

"State (9)"
P_9 = P_8
T_9 = T_max
h_9=enthalpy(Water,T=T_9,P=P_9)
s_9=entropy(Water,T=T_9,P=P_9)

"State (10)"
P_10 = P_6
s_10 = s_9
h_10isen = enthalpy(Water,s=s_10,P=P_10)
h_10= h_9 - Turb_highP_eff*(h_9-h_10isen)

"State (11)"
P_11 = P_10
T_11 = T_reheat
s_11=entropy(Water,T=T_11,P=P_11)
h_11=enthalpy(Water,T=T_11,P=P_11)

"State (12)"
 P_12 = P_3
 s_12 = s_11
h_12isen=enthalpy(Water,s=s_12,P=P_12)
h_12 = h_11 - (Turb_lowP_eff)*(h_11-h_12isen)
T_12=temperature(Water,P=P_12,s=s_12)

"State (13)"
P_13 = P_1
s_13 = s_12
x_13=quality(Water,P=P_13,s=s_13)
h_13isen =enthalpy(Water,P=P_13,s=s_13)
h_13 = h_12 - (Turb_lowP_eff)*(h_12isen-h_13isen)

"Energy Balance"
"Closed FWH"
y = (h_5 - h_4)/(h_10-h_4-h_6+h_5)

"Open FWH"
z*h_12 + (1-y-z)*h_2 = (1-y)*h_3

"Mixing Chamber"
h_8 = y*h_7 + (1-y)*h_5
```

```
"Results"
q_in = (h_9 - h_8)+(1-y)*(h_11-h_10)
q_out = (1-y-z)*(h_13-h_1)
thermal_eff = 1 - q_out/q_in
w_turb_total = h_9 - h_10 + (1-y)*(h_11-h_12) + (1-y-z)*(h_12-h_13)
w_pump_total = (1-y-z)*W_p1 + (1-y)*W_p2 + W_p3 *y
net_work = w_turb_total - w_pump_total
Power = net_work *m_dot
```

Unit Settings: SI C kPa kJ mass deg

(Table 1, Run 5)

h_1 = 173.8 [kJ/kg]	h_{10} = 3337 [kJ/kg]	h_{10isen} = 3163 [kJ/kg]	h_{11} = 3711 [kJ/kg]	h_{12} = 3373 [kJ/kg]	h_{12isen} = 3097 [kJ/kg]	h_{13} = 2950 [kJ/kg]	h_{13isen} = 2327 [kJ/kg]	h_2 = 174.9 [kJ/kg]	h_3 = 670.4 [kJ/kg]	h_4 = 676.6 [kJ/kg]
h_5 = 1073 [kJ/kg]	h_6 = 1073 [kJ/kg]	h_7 = 1099 [kJ/kg]	h_8 = 1077 [kJ/kg]	h_9 = 3640 [kJ/kg]	$\dot{m}$ = 56.64 [kg/s]	net_{work} = 884.8 [kJ/kg]	Power = 50120 [kJ/s]	$Pump_{eff}$ = 0.57	P_1 = 8 [kPa]	P_{10} = 3800 [kPa]
P_{11} = 3800 [kPa]	P_{12} = 600 [kPa]	P_{13} = 8 [kPa]	P_2 = 600 [kPa]	P_3 = 600 [kPa]	P_4 = 3800 [kPa]	P_5 = 3800 [kPa]	P_6 = 3800 [kPa]	P_7 = 16000 [kPa]	P_8 = 16000 [kPa]	P_9 = 16000 [kPa]
q_{in} = 2881 [kJ/kg]	q_{out} = 1997 [kJ/kg]	s_1 = 0.5925 [kJ/kg-K]	s_{10} = 6.716 [kJ/kg-K]	s_{11} = 7.435 [kJ/kg-K]	s_{12} = 7.435 [kJ/kg-K]	s_{13} = 7.435 [kJ/kg-K]	s_2 = 0.5925 [kJ/kg-K]	s_3 = 1.931 [kJ/kg-K]	s_4 = 1.931 [kJ/kg-K]	s_5 = 2.769 [kJ/kg-K]
s_6 = 2.769 [kJ/kg-K]	s_7 = 2.769 [kJ/kg-K]	s_9 = 6.716 [kJ/kg-K]	$thermal_{eff}$ = 0.3071	$Turb_{highP,eff}$ = 0.635	$Turb_{lowP,eff}$ = 0.55	T_{11} = 615 [C]	T_{12} = 317 [C]	T_2 = 41.53 [C]	T_4 = 159.2 [C]	T_7 = 250.3 [C]
T_9 = 625 [C]	T_{max} = 625 [C]	T_{reheat} = 615 [C]	T_{sat1} = 41.51 [C]	T_{sat3} = 158.8 [C]	T_{sat6} = 247.3 [C]	v_1 = 0.001008 [m^3/kg]	v_3 = 0.001101 [m^3/kg]	v_6 = 0.001245 [m^3/kg]	W_{p1} = 1.047 [kJ/kg]	W_{p2} = 6.179 [kJ/kg]
W_{p3} = 26.66 [kJ/kg]	$w_{pump,total}$ = 9.981 [kJ/kg]	$w_{turb,total}$ = 894.8 [kJ/kg]	x_1 = 0	x_{13} = 0.8962	x_3 = 0	x_5 = 0	x_6 = 0	y = 0.1489	z = 0.1318	

4.Results and Discussion

4.1. Analysis Results

The analysis of the regenerative-reheat Rankine cycle is based on a complex configuration featuring 13 distinct state points.

- **System Configuration**: The plant utilizes a High-Pressure (HP) turbine and a Low-Pressure (LP) turbine with an intermediate reheating process. Two stages of regenerative feedwater heating (one open and one closed) are used to maximize the average temperature of heat addition.
- **Operating Parameters**: The cycle operates at a maximum boiler pressure of **16 MPa** and a maximum steam temperature of **625 °C**. Reheating occurs at **3.8 MPa** back to **615 °C**, while the condenser pressure is maintained at **8 kPa** to optimize efficiency.
- **Efficiency and Flow**: The mass flow rate required to meet the 50.12 MW demand is approximately **56.6 kg/s**. The thermal efficiency was improved from an initial 19.53% to a final optimized value of **30.7%** by increasing operating temperatures and lowering condenser pressure.
- **Component Efficiencies**: For the non-ideal cycle analysis, realistic isentropic efficiencies were applied: **57% for pumps**, **63.5% for the HP turbine**, and **55% for the LP turbine**.

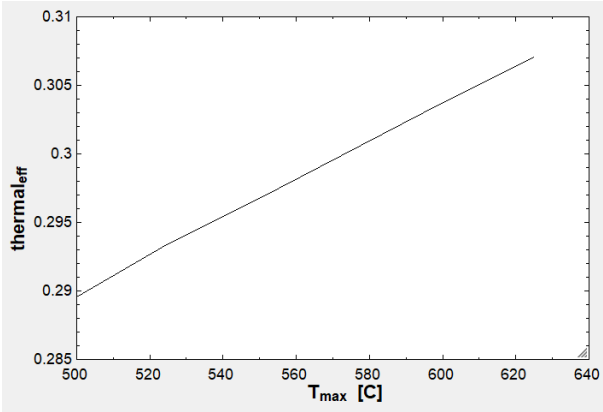

1..5	T_{max} [C]	T_{reheat} [C]	$thermal_{eff}$
Run 1	500	490	0.2896
Run 2	525	515	0.2934
Run 3	550	525	0.2967
Run 4	600	585	0.3037
Run 5	625	615	0.3071

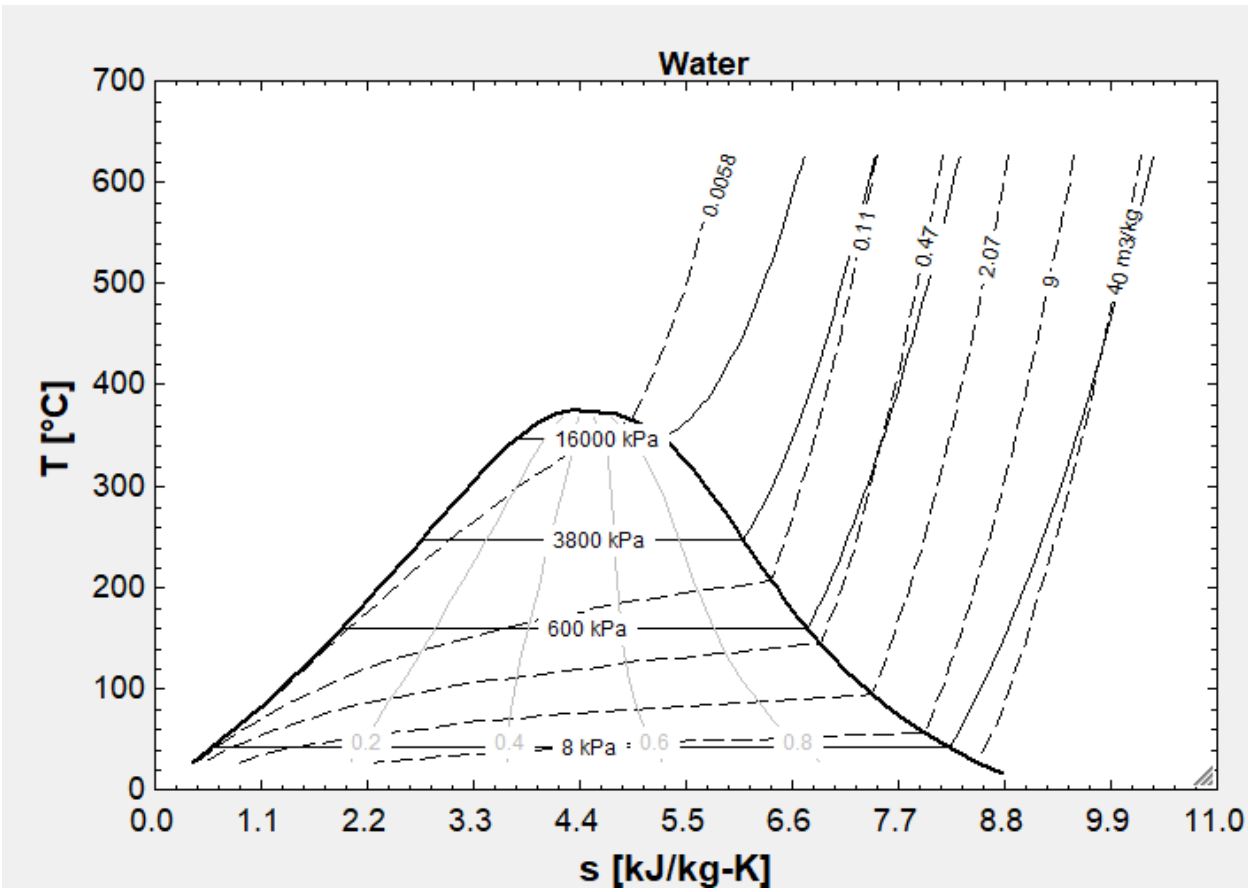

4.2. Visualization and Optimization

Optimization:

Initially, we performed calculations for a cycle which was having the Maximum temperature which is at inlet of turbine equal to 585 ^{0}C and a reheat temperature equal to 575 ^{0}C. Also, the condenser pressure was 12 kPa. The efficiency of that cycle came out to be 19.54% which is very less. So, we planned to increase efficiency by increasing the reheat and the maximum average temperatures and by reducing the condenser pressure. We increased the

maximum temperature to 625 ^{0}C and the reheat temperature increased to 615 ^{0}C. The condenser pressure was kept lower at 8 kPa. After changing this configuration, when we calculated the efficiency of the cycle it came out to be 30.7%, which is quite good as our turbines and pumps were less efficient.

	P1	P2	P3	P4	P5	P6	P7	P8	P9	P10	P11	P12	P13
1	0.012	0.6	0.6	3.8	3.8	3.8	16	16	16	3.8	3.8	0.6	0.012
2	0.008	0.6	0.6	3.8	3.8	3.8	16	16	16	3.8	3.8	0.6	0.008

Note: All Pressures are in MPa

	Temp maximum (^{0}C)	Temp Reheat (^{0}C)
1	585	575
2	625	615

	$\mathbf{W_{net}(kJ/kg)}$	$q_{in}(\mathbf{kJ/kg})$	$q_{out}(\mathbf{kJ/kg})$	$\eta_{th}(\%)$
1	476.02711	2436.1383	1960.1253	19.53
2	885.02700	2881.9880	1997.2300	30.70

5.CEP Application

5.1. System Implementation and Load Calculation

Data Centres are facilities that hold servers, data storage devices, and networking equipment for processing and transmission. Data Centres consume large magnitudes of energy, which is used for different functions within the facility, mainly to run the equipment necessary for carrying out the said task, and to cool down the equipment continuously, as data centres run 24/7, with downtime being a major issue.

The Data Centre we are powering here consumes 50 MW of power, with scalable capacity. The facility covers an area of 540,000 sq ft or 50,500 m^2, comprising of multiple storeys.The power consumption breakdown of such facilities usually follows a typical pattern, due to the

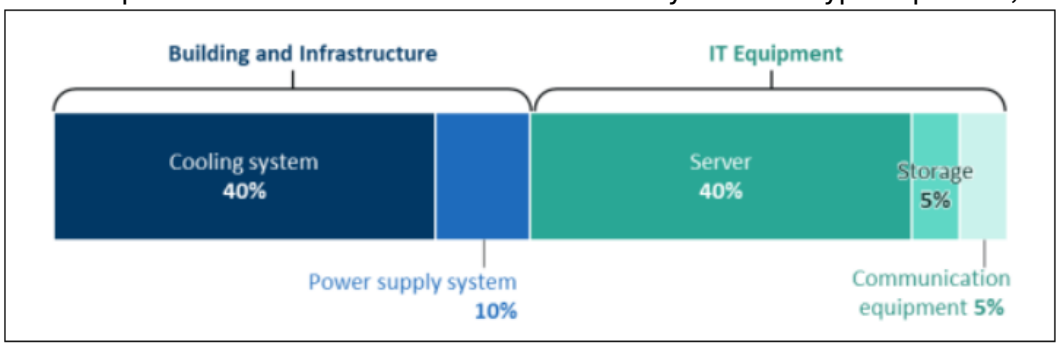

similarity in general physical functioning of them, they usually provide the hardware for processing, storage, and transmission of data. Thus, here is a typical breakdown for such a facility;

Moving on to our facility, we can now show the magnitude of the power consumed for each of the categories of usage by the installed equipment out of the total 50MW;

Usage	Equipment	Consumption(MW)
Cooling System	Continuous water supply and other elaborate methods	20
IT Equipment	Servers	20
Power Supply System	UPS devices, Transformers	5
Storage	Storage Drives	2.5
Communication and Others	Lighting, Controls of facility	2.5

5.2. Waste Heat Recovery

Waste heat recovery plays a crucial role in improving the overall energy utilization of large-scale power generation systems, particularly when supplying continuous-load facilities such as data centres. In the proposed Rankine cycle, a significant amount of thermal energy is rejected in the **condenser** and extracted steam streams used in feedwater heating. Rather than allowing this energy to dissipate unused, it can be effectively recovered and repurposed.

For the data centre application, low-grade waste heat rejected from the condenser can be utilized for **absorption chillers** to support the facility's cooling demand. Since cooling systems account for approximately **40% of the total data centre power consumption**, recovering thermal energy for chilled water production can substantially reduce auxiliary electrical loads. Additionally, extracted steam from the turbines already contributes to regenerative feedwater heating, thereby increasing the average temperature of heat addition and improving cycle efficiency. By integrating waste heat recovery into the system design, the overall plant efficiency and sustainability are enhanced, fuel consumption is reduced, and the environmental impact of continuous power generation is minimized. This makes the proposed Rankine cycle configuration particularly suitable for modern energy-intensive infrastructure.

5.3. Finance

5.3.1. Cost of Plant Setup

Component	Industry Example	Estimated Cost(USD)
Steam Turbine Generator	Siemens SST-600 / GE ST-A650	14-18 Million
High Pressure Boiler & Reheater	Babcock & Wilcox (B&W)	22-28 Million
Surface Condenser	Graham Corp / Foster Wheeler	4.5-6 Million
High Pressure Feed Pumps(2x)	Sulzer HPT / KSB HGC	2-3 Million
Feedwater Heaters(1 Open,1 Closed)	Yuba Heat Transfer	3.5-5 Million
Cooling Tower System	GEA / SPX Marley	3-4.5 Million
Total(Major Equipment)		49-64.5 Million

These components were selected based on the requirement of our Plant, they can withstand upto 600 Celsius as they are made of Steel alloy, if any higher we need special alloys which can be very expensive.

5.3.2. Running Cost & Revenue:

Total Power Generation: 50120 kW

Total Cost: Almost 100 Million USD (Includes other charges,land,construction etc.)

Heat Input = 50.12 MW at 30.7% = 163 MW

Fuel (Hyderabad Coal):

Energy Released = 4200-5200 Kcal/kg = 17500 -21700 kJ/kg

$$Mass\ Flow\ Rate\ of\ Coal\ = \frac{Heat\ Input}{Efficiency\ Boiler\ \times\ LHV} = \frac{163000\ kW}{85\%\ \times 17500} = 10.96\frac{kg}{s}$$

Total Coal Per Day = 10.96 x 24 x 60 x 60 = 946944 kg/ day = 947 ton/day

Cost Per Ton = 12,000 PKR

Total Fuel Cost Per Day = 12000 x 947 = 11,364,000 PKR Per Day

Electricity Produced Per Day = 50120kWh x 24 = 1,202,880 Units

Total Price of Electricity = 1,202,880 Units x 44.46 PKR Per Unit = 53,480,045 PKR

Revenue after Running Cost = 53,480,045 – 11,364,000 = 42,116,045 PKR

Annual Revenue = 42.116 x 330 = 13,898.28 Million PKR/year

Plant Set Up Cost = 100 Million USD = 28,017,550,000 PKR

Return on Investment = 28,017.55 Million / 13,898.28 Million = 2.016 year = 49.6 %

6.Conclusion

In this project, an optimized regenerative–reheat Rankine cycle was successfully designed to meet a net power output of **50.12 MW**. The inclusion of a two-stage turbine with reheating and both open and closed feedwater heaters proved effective in increasing the average temperature of heat addition while reducing cycle irreversibilities. Through optimization, specifically increasing turbine inlet and reheat temperatures while reducing condenser pressure—the cycle efficiency significantly improved to **30.7%**.

The application of this system to a **50 MW data centre** highlights its suitability for high-reliability, continuous power supply. Furthermore, the integration of waste heat recovery (e.g., for absorption chillers) provides additional benefits by supporting the facility's massive cooling demands and improving overall sustainability. This project demonstrates that an advanced Rankine cycle configuration is a feasible and efficient solution for modern energy-intensive industrial facilities

7.References

1. Data Centers and Their Energy Consumption: Frequently Asked Questions | Congress.gov | Library of Congress

2. Campuses - Sky47 | AI-Ready Tier III/IV Data Centre & Sovereign Cloud Pakistan

3. 15 Largest Data Centers in the World

4. Buy Hyderabad Coal (Koyla) Online - Zarea

5. IESCO