FPGA

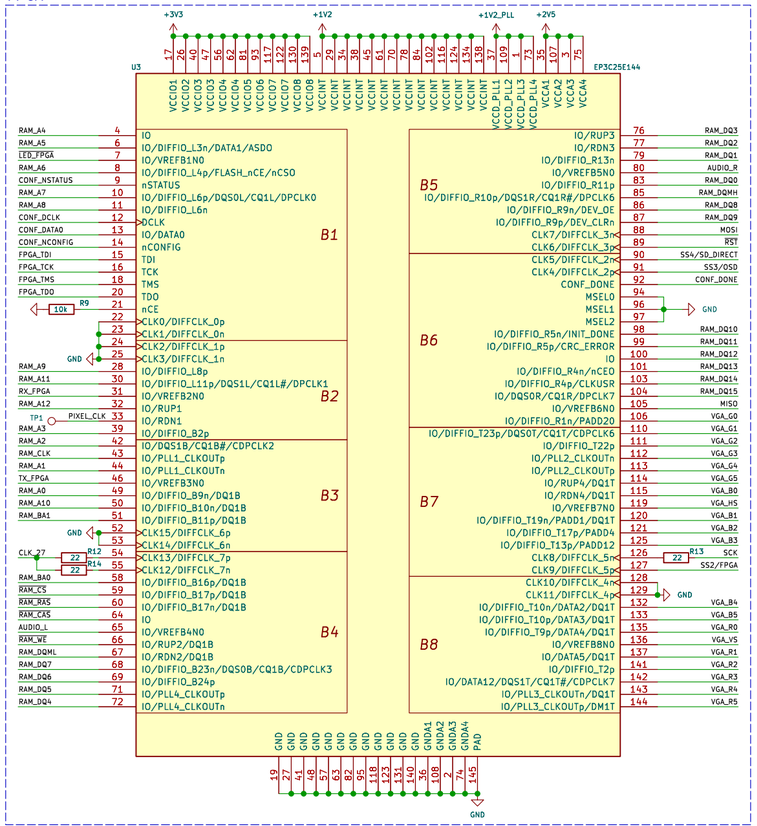

SDRAM memory

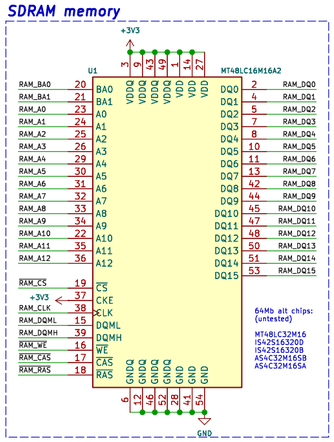

Clock

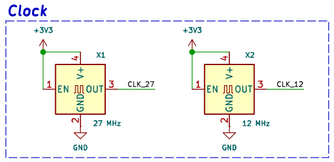

IO ARM controller

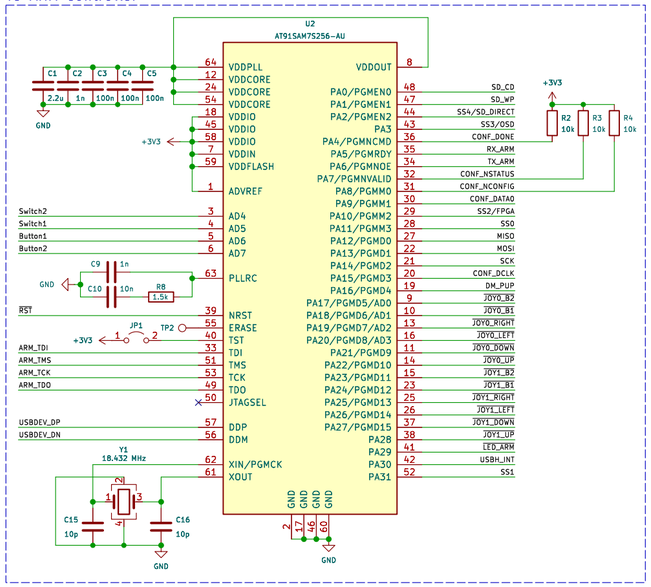

Power in / USB device

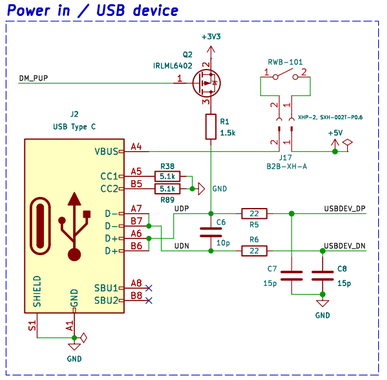

Joystick ports

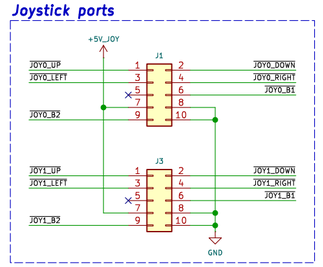

USB host

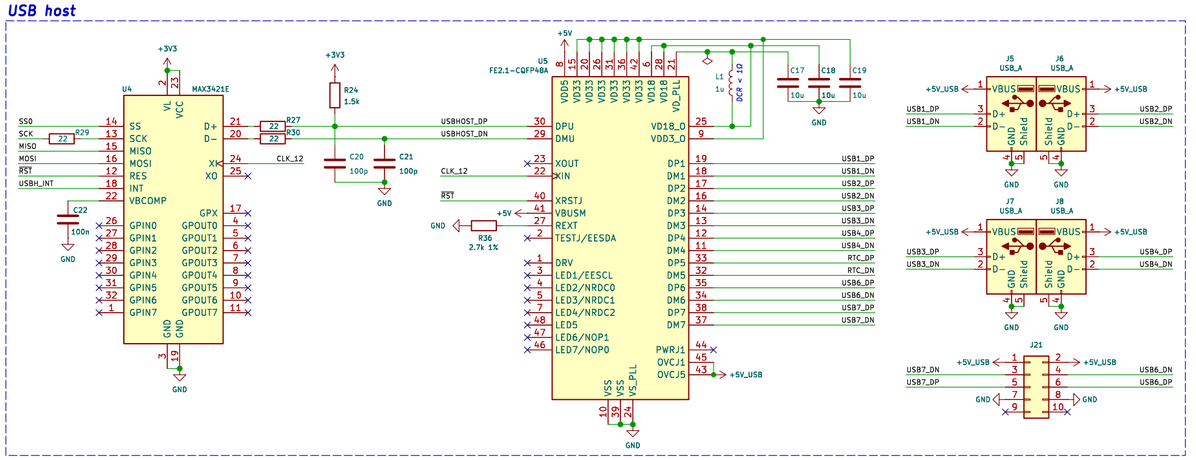

Reset

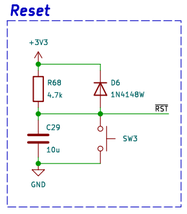

Buttons

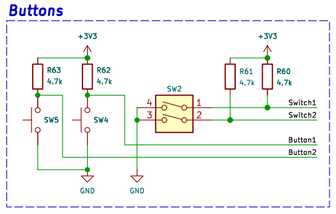

LEDs

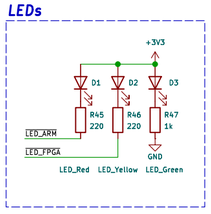

MIDI

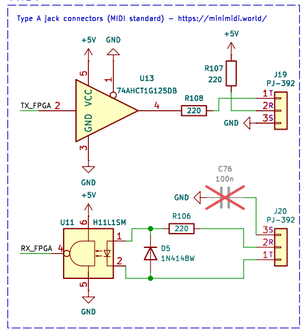

CVBS

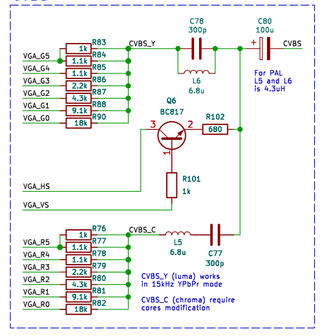

Debug

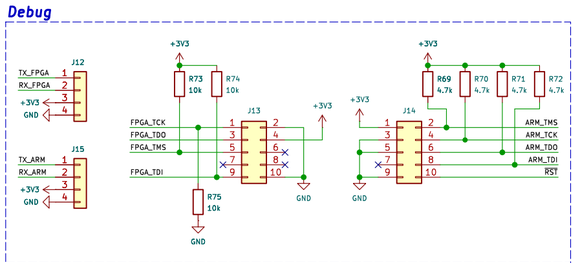

WiFi

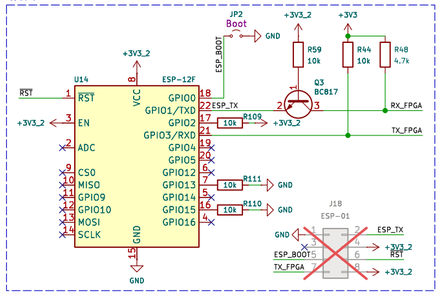

RTC

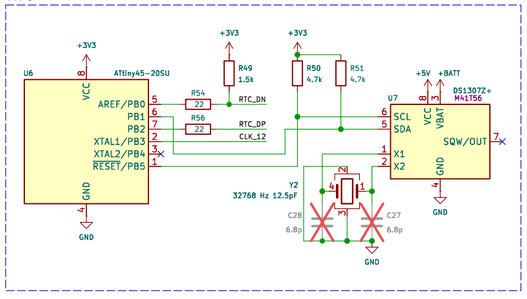

AV out

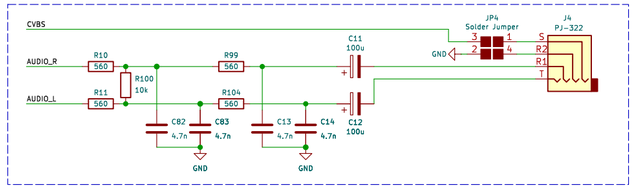

SD card

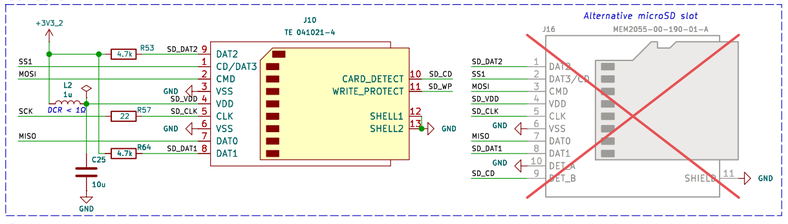

Tape

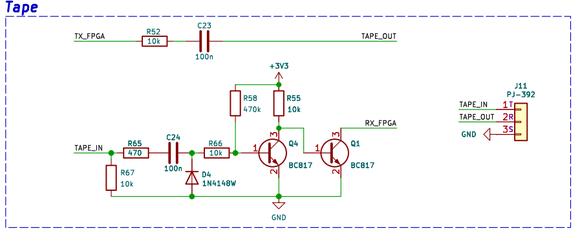

Power

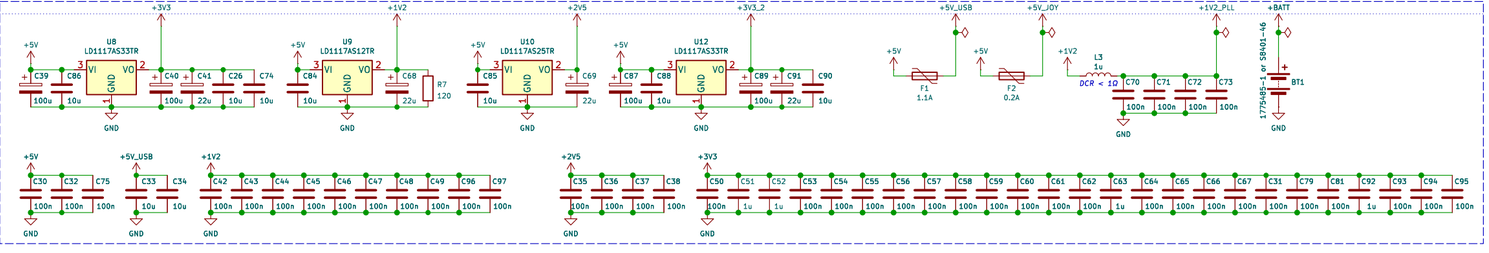

Joystick ports

VGA

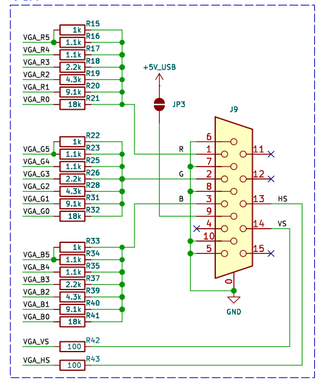

AV out

Power

H1 Screw M3 dk=5mm L=4mm
H2 Screw M3 dk=5mm L=4mm
H3 Screw M3 dk=5mm L=4mm
H4 Screw M3 dk=5mm L=4mm

G738 or G706

10x10 PCB variant of MIST FPGA project

Eugene Lozovoy

Sheet: /
File: mist1010.kicad_sch

Title: MIST.1010

Size: User	Date: 2025-05-04	Rev: C1
KiCad E.D.A. 8.0.9		Id: 1/1

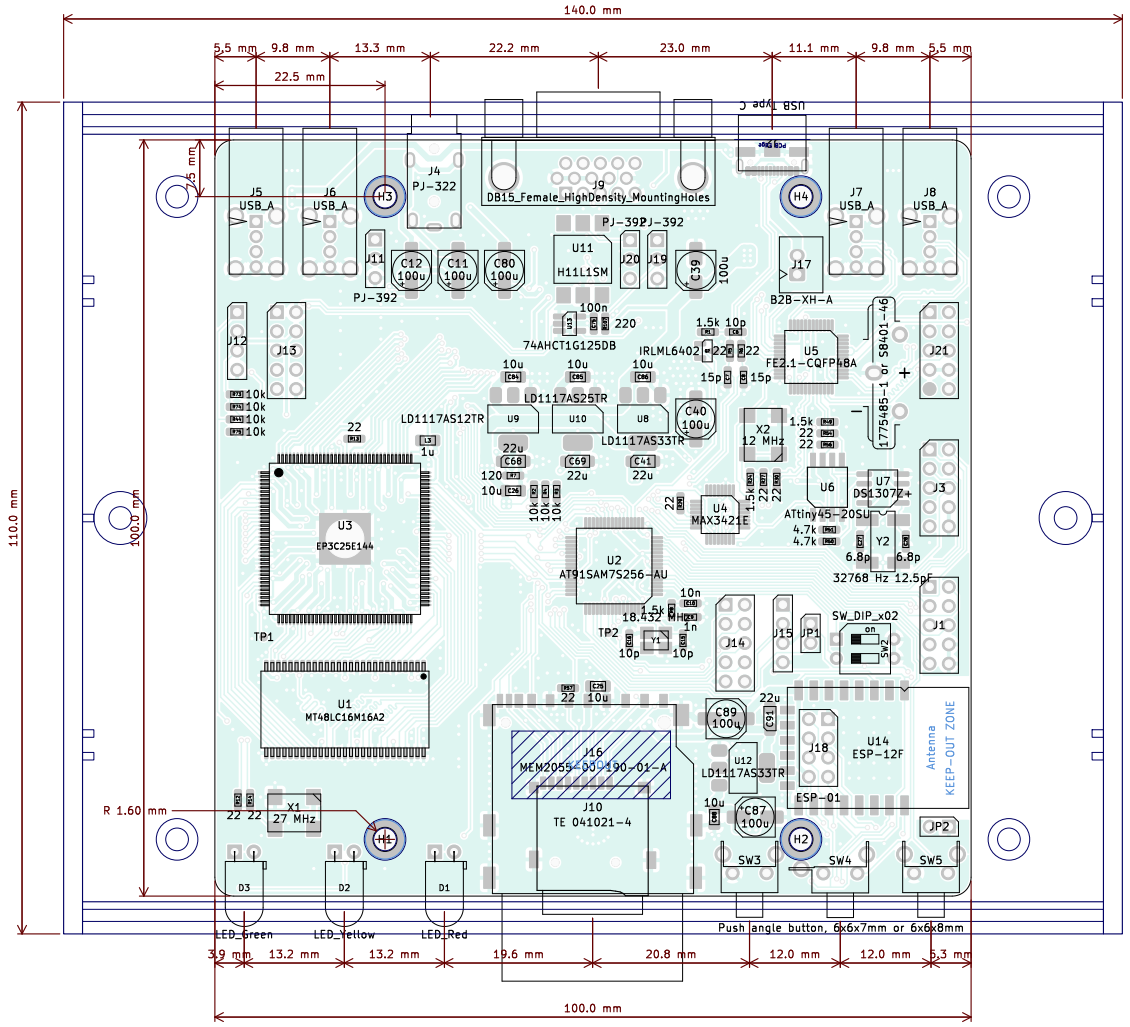

Dimensions: 100x100mm	Min clearance: 0.2mm
Layers: 2	Min track: 0.2mm
Thickness: 1.6mm	Min hole: 0.3mm
	Min annular ring: 0.15mm

Eugene Lozovoy

Sheet:
File: mist1010.kicad_pcb

Title: MIST.1010

Size: A4	Date: 2025-05-04	**Rev: C1**
KiCad E.D.A. 8.0.9		Id: 1/1

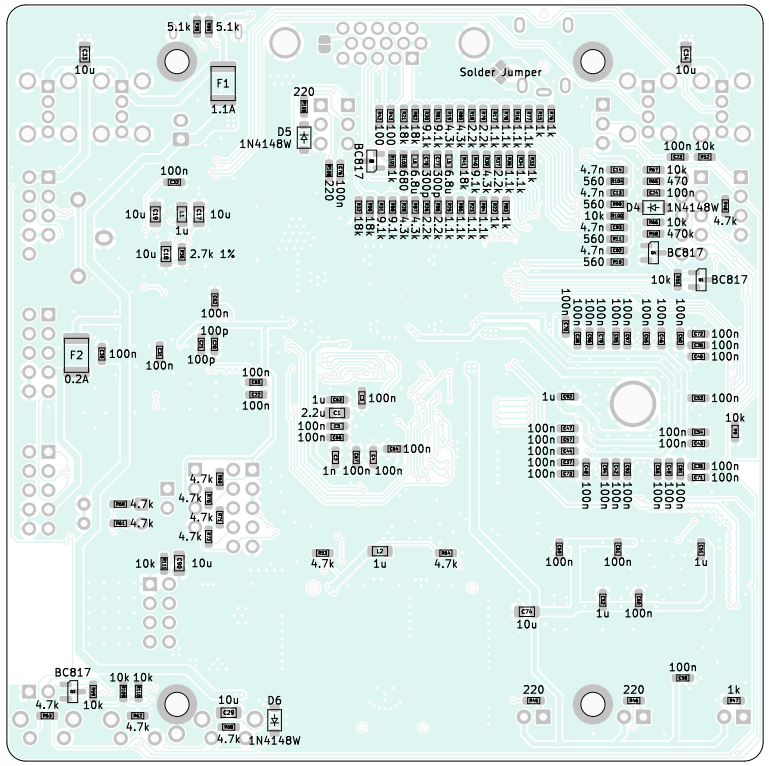
5.1k
5.1k
10u
F1
1.1A
220
D5
1N4148W
BC817
Solder Jumper
10u
100n
10u
1u
10u
10u
2.7k 1%
100n
100p
F2
0.2A
100n
100n
100p
100n
100n
1u
2.2u
100n
100n
100n
1n
100n
100n
4.7k
4.7k
4.7k
4.7k
4.7k
4.7k
10k
10u
4.7k
1u
4.7k
100n
100n
1u
10u
1u
100n
100n
10k 470
100n
4.7n
560
4.7n
560
10k
4.7n
560
4.7n
560
D4
1N4148W
4.7k
10k
470k
BC817
10k
BC817
100n
100n
100n

Bill Of Materials

References	Value	Footprint	Qty
BT1	1775485-1 or S8401-46	my:CR2032V	1
C1	2.2u	Capacitor_SMD:C_0805_2012Metric_Pad1.18x1.45mm_HandSolder	1
C2 C9	1n	Capacitor_SMD:C_0603_1608Metric_Pad1.08x0.95mm_HandSolder	2
C3 C4 C5 C22 C23 C24 C30 C31 C32 C35 C36 C37 C38 C42 C43 C44 C45 C46 C47 C48 C49 C50 C53 C54 C55 C56 C57 C58 C59 C60 C61 C62 C64 C65 C66 C67 C70 C71 C72 C73 C75 C79 C81 C93 C94 C95 C96 C97	100n	Capacitor_SMD:C_0603_1608Metric_Pad1.08x0.95mm_HandSolder	48
C6 C15 C16	10p	Capacitor_SMD:C_0603_1608Metric_Pad1.08x0.95mm_HandSolder	3
C7 C8	15p	Capacitor_SMD:C_0603_1608Metric_Pad1.08x0.95mm_HandSolder	2
C10	10n	Capacitor_SMD:C_0603_1608Metric_Pad1.08x0.95mm_HandSolder	1
C11 C12 C39 C40 C80 C87 C89	100u	Capacitor_SMD:CP_Elec_5x5.9	7
C13 C14 C82 C83	4.7n	Capacitor_SMD:C_0603_1608Metric_Pad1.08x0.95mm_HandSolder	4
C17 C18 C19 C25 C26 C29 C33 C34 C74 C84 C85 C86 C88 C90	10u	Capacitor_SMD:C_0805_2012Metric_Pad1.18x1.45mm_HandSolder	14
C20 C21	100p	Capacitor_SMD:C_0603_1608Metric_Pad1.08x0.95mm_HandSolder	2
C41 C68 C69 C91	22u	Capacitor_Tantalum_SMD:CP_EIA-3216-18_Kemet-A_Pad1.58x1.35mm_HandSolder	4
C51 C52 C63 C92	1u	Capacitor_SMD:C_0603_1608Metric_Pad1.08x0.95mm_HandSolder	4
C77 C78	300p	Capacitor_SMD:C_0603_1608Metric_Pad1.08x0.95mm_HandSolder	2
D1	LED_Red	LED_THT:LED_D5.0mm_Horizontal_O1.27mm_Z3.0mm	1
D2	LED_Yellow	LED_THT:LED_D5.0mm_Horizontal_O1.27mm_Z3.0mm	1
D3	LED_Green	LED_THT:LED_D5.0mm_Horizontal_O1.27mm_Z3.0mm	1
D4 D5 D6	1N4148W	Diode_SMD:D_SOD-123	3
F1	1.1A	Fuse:Fuse_1812_4532Metric_Pad1.30x3.40mm_HandSolder	1
F2	0.2A	Fuse:Fuse_1812_4532Metric_Pad1.30x3.40mm_HandSolder	1
H1 H2 H3 H4	Screw M3 dk=5mm L=4mm	my:MountingHole_3.2mm_M3_dk5.2mm_Mask	4
J1 J3 J13 J14 J21	Conn_02x05_Odd_Even	Connector_PinHeader_2.54mm:PinHeader_2x05_P2.54mm_Vertical	5
J2	USB Type C	my:USB_C_Receptacle_HRO_TYPE-C-31-M-12_dangling	1
J4	PJ-322	my:PJ-322	1

J5 J6 J7 J8	USB_A	Connector_USB:USB_A_Wuerth_614004134726_Horizontal	4
J9	DB15_Female_HighDensity_MountingHoles	Connector_Dsub:DSUB-15-HD_Female_Horizontal_P2.29x1.98mm_EdgePinOffset3.03mm_Housed_MountingHolesOffset4.94mm	1
J10	TE 041021-4	my:SD_TE_2041021-mod	1
J11 J19 J20	PJ-392	Connector_PinHeader_2.54mm:PinHeader_1x03_P2.54mm_Vertical	3
J12 J15	Conn_01x04	Connector_PinHeader_2.54mm:PinHeader_1x04_P2.54mm_Vertical	2
J16	MEM2055-00-190-01-A	my:GCT-MEM2055-00-190-01-A	1
J17	B2B-XH-A	Connector_JST:JST_XH_B2B-XH-A_1x02_P2.50mm_Vertical	1
J22	XHP-2, SXH-002T-P0.6		1
JP1 JP2	Jumper	Connector_PinHeader_2.54mm:PinHeader_1x02_P2.54mm_Vertical	2
L1 L2 L3	1u	Inductor_SMD:L_0805_2012Metric_Pad1.15x1.40mm_HandSolder	3
L5 L6	6.8u	Inductor_SMD:L_0603_1608Metric_Pad1.05x0.95mm_HandSolder	2
N1	G738 or G706	my:g738-g706	1
Q1 Q3 Q4 Q6	BC817	Package_TO_SOT_SMD:SOT-23	4
Q2	IRLML6402	Package_TO_SOT_SMD:SOT-23	1
R1 R8 R24 R49	1.5k	Resistor_SMD:R_0603_1608Metric_Pad0.98x0.95mm_HandSolder	4
R2 R3 R4 R9 R44 R52 R55 R59 R66 R67 R73 R74 R75 R100 R109 R110 R111	10k	Resistor_SMD:R_0603_1608Metric_Pad0.98x0.95mm_HandSolder	17
R5 R6 R12 R13 R14 R27 R29 R30 R54 R56 R57	22	Resistor_SMD:R_0603_1608Metric_Pad0.98x0.95mm_HandSolder	11
R7	120	Resistor_SMD:R_0603_1608Metric_Pad0.98x0.95mm_HandSolder	1
R10 R11 R99 R104	560	Resistor_SMD:R_0603_1608Metric_Pad0.98x0.95mm_HandSolder	4
R15 R22 R33 R47 R76 R83 R101	1k	Resistor_SMD:R_0603_1608Metric_Pad0.98x0.95mm_HandSolder	7
R16 R17 R23 R25 R34 R35 R77 R78 R84 R85	1.1k	Resistor_SMD:R_0603_1608Metric_Pad0.98x0.95mm_HandSolder	10
R18 R26 R37 R79 R86	2.2k	Resistor_SMD:R_0603_1608Metric_Pad0.98x0.95mm_HandSolder	5
R19 R28 R39 R80 R87	4.3k	Resistor_SMD:R_0603_1608Metric_Pad0.98x0.95mm_HandSolder	5
R20 R31 R40 R81 R88	9.1k	Resistor_SMD:R_0603_1608Metric_Pad0.98x0.95mm_HandSolder	5
R21 R32 R41 R82 R90	18k	Resistor_SMD:R_0603_1608Metric_Pad0.98x0.95mm_HandSolder	5
R36	2.7k 1%	Resistor_SMD:R_0603_1608Metric_Pad0.98x0.95mm_HandSolder	1
R38 R89	5.1k	Resistor_SMD:R_0603_1608Metric_Pad0.98x0.95mm_HandSolder	2

R42 R43	100	Resistor_SMD:R_0603_1608Metric_Pad0.98x0.95mm_HandSolder	2
R45 R46 R106 R107 R108	220	Resistor_SMD:R_0603_1608Metric_Pad0.98x0.95mm_HandSolder	5
R48 R50 R51 R53 R60 R61 R62 R63 R64 R68 R69 R70 R71 R72	4.7k	Resistor_SMD:R_0603_1608Metric_Pad0.98x0.95mm_HandSolder	14
R58	470k	Resistor_SMD:R_0603_1608Metric_Pad0.98x0.95mm_HandSolder	1
R65	470	Resistor_SMD:R_0603_1608Metric_Pad0.98x0.95mm_HandSolder	1
R102	680	Resistor_SMD:R_0603_1608Metric_Pad0.98x0.95mm_HandSolder	1
SW1	RWB-101		1
SW2	SW_DIP_x02	Button_Switch_THT:SW_DIP_SPSTx02_Slide_6.7x6.64mm_W7.62mm_P2.54mm_LowProfile	1
SW3 SW4 SW5	Push angle button, 6x6x7mm or 6x6x8mm	Button_Switch_THT:SW_Tactile_SPST_Angled_PTS645Vx58-2LFS	3
U1	MT48LC16M16A2	PCM_Package_SO_AKL:TSOP-II-54_22.2x10.16mm_P0.8mm	1
U2	AT91SAM7S256-AU	Package_QFP:TQFP-64_10x10mm_P0.5mm	1
U3	EP3C25E144	my:ALTERA-QFP-145	1
U4	MAX3421E	Package_QFP:LQFP-32_5x5mm_P0.5mm	1
U5	FE2.1-CQFP48A	Package_QFP:LQFP-48_7x7mm_P0.5mm	1
U6	ATtiny45-20SU	Package_SO:SOIC-8W_5.3x5.3mm_P1.27mm	1
U7	DS1307Z+ (Alternatives: M41T56)	Package_SO:SOIC-8_3.9x4.9mm_P1.27mm	1
U8 U12	LD1117AS33TR	Package_TO_SOT_SMD:SOT-223-3_TabPin2	2
U9	LD1117AS12TR	Package_TO_SOT_SMD:SOT-223-3_TabPin2	1
U10	LD1117AS25TR	Package_TO_SOT_SMD:SOT-223-3_TabPin2	1
U11	H11L1SM	Package_DIP:SMDIP-6_W9.53mm	1
U13	74AHCT1G125DB	Package_TO_SOT_SMD:SOT-23-5_HandSoldering	1
U14	ESP-12F (Alternatives: ESP-12E)	RF_Module:ESP-12E	1
X1	27 MHz	my:Oscillator_SMD_7050_7.0x5.0mm	1
X2	12 MHz	my:Oscillator_SMD_7050_7.0x5.0mm	1
Y1	18.432 MHz	my:Crystal_SMD_3225-4Pin_3.2x2.5mm_HandSoldering	1
Y2	32768 Hz 12.5pF	Crystal:Crystal_SMD_SeikoEpson_MC306-4Pin_8.0x3.2mm_HandSoldering	1

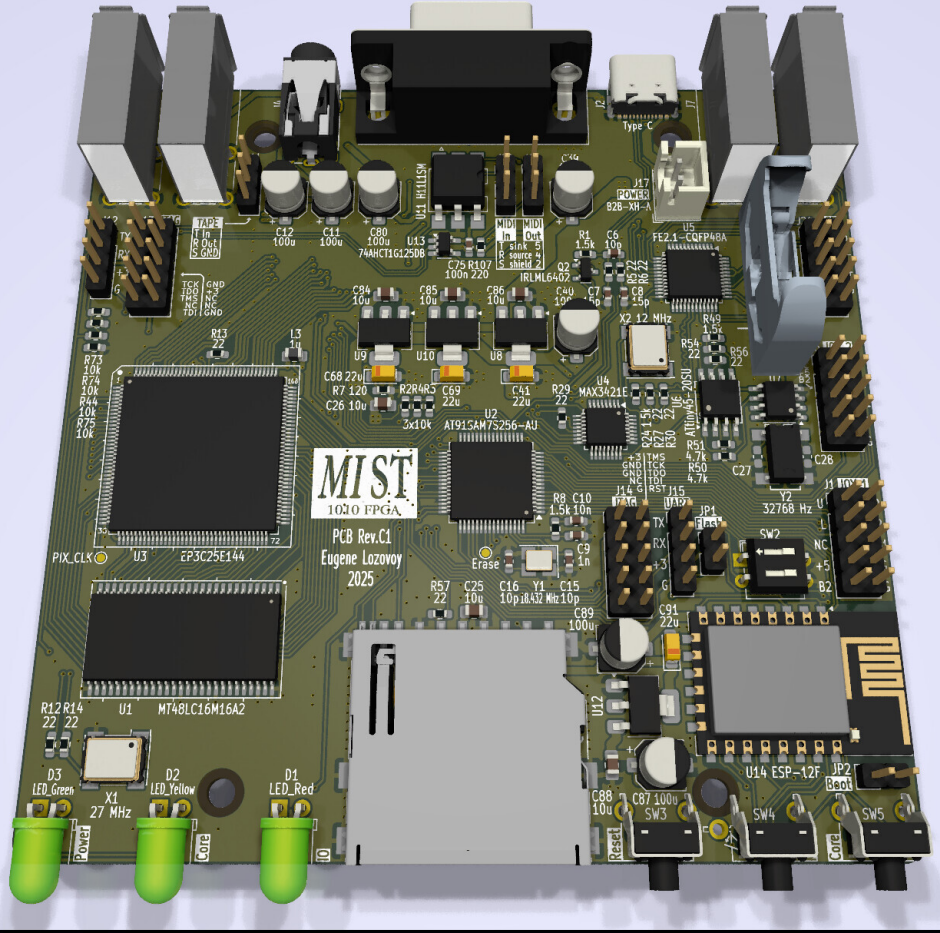
MIST
1010 FPGA
PCB Rev.C1
Eugene Lozovoy
2025
U3 EP3C25E144
U1 MT48LC16M16A2
U2 AT91SAM7S256-AU
U4 MAX3421E
U5 FE2.1-CQFP48A
U14 ESP-12F
U13 74AHCT1G125DB
U11 H11L1SM
U12
U9
U10
U8
Q2 IRLML6402
X1 27 MHz
X2 12 MHz
Y1 18.432 MHz
Y2 32768 Hz
Type C
J17 POWER B2B-XH-A
J14 TAG
J15 UART
J1 HDX-1
JP1 Flash
JP2 Boot
SW2
SW3
SW4
SW5
Erase
Reset
Core
Power
IO
D1 LED_Red
D2 LED_Yellow
D3 LED_Green
PIX_CLK
TAPE
MIDI In
MIDI Out
C12 100u
C11 100u
C80 100u
C75 100n
R107 220
R1 1.5k
C6 10u
C84 10u
C85 10u
C86 10u
C40 10u
C7 15p
C8 15p
R49 1.5k
R54 22
R56 22
R13 22
L3 1u
R73 10k
R74 10k
R44 10k
R75 10k
C68 22u
R7 120
C26 10u
R2R4R5 3x10k
C69 22u
C41 22u
R29 22
R24 1.5k
R27 22
R30 22
R51 4.7k
R50 4.7k
C27
C28
R8 1.5k
C10 10n
C9 1n
R57 22
C25 10u
C16 10p
C15 10p
C89 100u
C91 22u
C88 10u
C87 100u
R12 22
R14 22
TCK GND
TDO +3
TMS NC
NC NC
TDI GND
TX
RX
+3
G
NC
+5
B2
TMS
TCK
TDO
TDI
RST

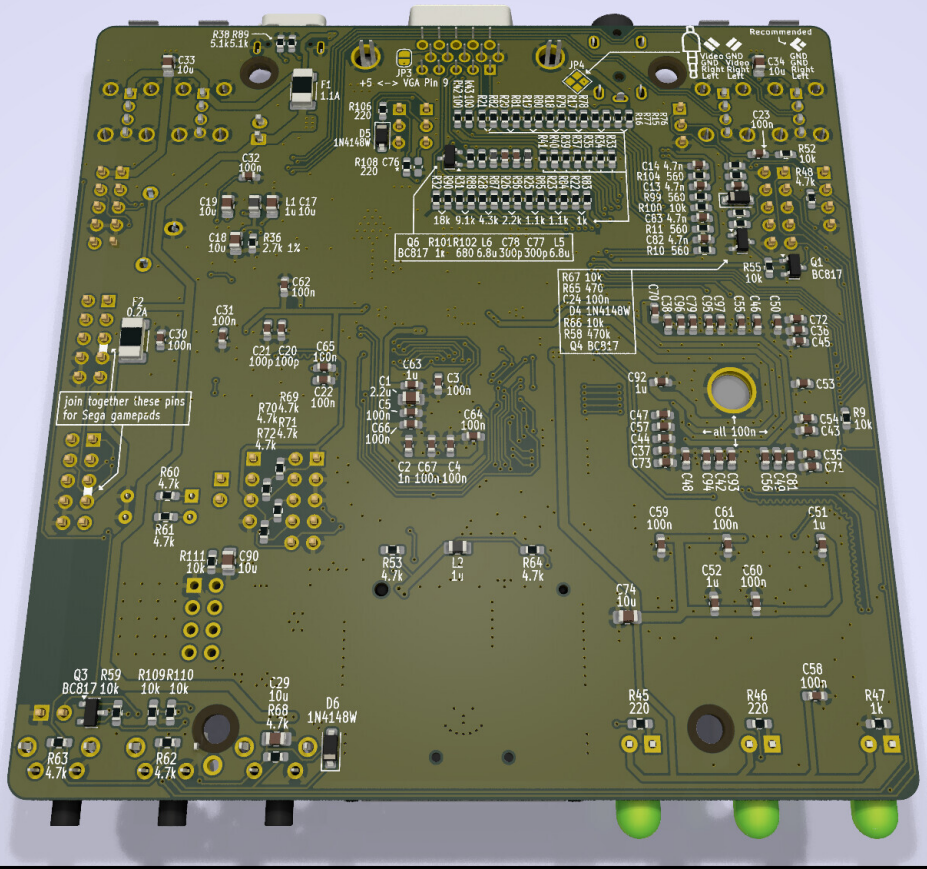
join together these pins for Sega gamepads
Recommended
+5 <-> VGA Pin 9
Q6 R101 R102 L6 C78 C77 L5
BC817 1k 680 6.8u 300p 300p 6.8u
R67 10k
R65 47G
C24 100n
D4 1N4148W
R66 10k
R58 470k
Q4 BC817
←all 100n→