Tampereen yliopisto

Ristomatti Pöri

MILP MODEL TO ASSESS FLEXIBILITY AND TECHNO-ENONOMIC IMPACT OF HEAT PUMPS IN POWER SYSTEMS

COPYRIGHT – MIT LICENSE

Copyright (c) 2026 Ristomatti Pöri

Permission is hereby granted, free of charge, to any person obtaining a copy of this software and associated documentation files (the "Software"), to deal in the Software without restriction, including without limitation the rights to use, copy, modify, merge, publish, distribute, sublicense, and/or sell copies of the Software, and to permit persons to whom the Software is furnished to do so, subject to the following conditions:

The above copyright notice and this permission notice shall be included in all copies or substantial portions of the Software.

THE SOFTWARE IS PROVIDED "AS IS", WITHOUT WARRANTY OF ANY KIND, EXPRESS OR IMPLIED, INCLUDING BUT NOT LIMITED TO THE WARRANTIES OF MERCHANTABILITY, FITNESS FOR A PARTICULAR PURPOSE AND NONIFRINGEMENT. IN NO EVENT SHALL THE AUTHORS OR COPYRIGHT HOLDERS BE LIABLE FOR ANY CLAIM, DAMAGES OR OTHER LIABILITY, WHETHER IN AN ACTION OF CONTRACT, TORT OR OTHERWISE, ARISING FROM, OUT OF OR IN CONNECTION WITH THE SOFTWARE OR THE USE OR OTHER DEALINGS IN THE SOFTWARE.

TABLE OF CONTENTS

1. MODEL INTRODUCTION 1
2. PROBLEM DESCRIPTION 3
3. MODEL FORMULATION 6
3.1 Production unit start-up and ramping 6
3.2 Heat pump model 6
3.3 Thermal storage coupled with a HP 9
3.4 Fuel consumption and electricity generation 14
3.5 Demand fulfillment and carbon emissions 14
3.6 Model objective 15
4. TIPS FOR THE USER 16
REFERENCES 17

ABBREVIATIONS AND SYMBOLS

Abbreviations

ATW	Air-to-water
CHP	Combined heat and power
COP	Coefficient of performance
DHN	District heating network
ES	Electrical storage
HOB	Heat only boiler
HP	Heat pump
MILP	Mixed integer linear programming
TS	Thermal storage
WHR	Waste heat recovery

Indices and sets

α	Origin of costs, $\alpha \in$ {fuel / electricity consumption (con), start-up (su), ramp-up (ru), heat loss (Ql)}
f	Fuel
i, j, k	Indices for units, $i, j, k \in \{N^{CHPa}, N^{CHPb}, N^{HOB}, N^{HPa}, N^{HPb}, N^{TS}, N^{ES}\}$
h	Heat flow direction, $h \in$ {charged into a TS unit (in), discharged from a TS unit (out), from a HP to a TS unit (in, HP)}
u	Heat flow source $u \in$ {air-to-water operation (ATW), recovered waste heat (rec), available waste heat (w)}
r	Partial efficiencies, $r \in$ {heat generation (Q), electricity generation (E)}
θ	Temperature node in a HP, $\theta \in$ {heat sink inlet ($sink, in$), heat sink outlet ($sink, out$), heat source inlet ($source, in$), heat source outlet ($source, out$)}
N^{CHPa}	Set of CHP units used for both electricity and heat generation
N^{CHPb}	Set of CHP units used electricity generation only
N'^{CHPa}	Subset of N^{CHPa}
N^{ES}	Set of electrical storage units
N'^{ES}	Subset of N^{ES}
N^{HOB}	Set of HOB units
N^{HPa}	Set of HP units that recover waste heat from CHP units and ES, and operate in ATW mode
N^{HPb}	Set of HP units that are integrated with TS units
N^{TS}	Set of TS units
N^{t}	Simulation time horizon, $t \in [1,2,3, \dots, T]$

Variables

$C_i^{\alpha}(t)$	Costs originating from factor α ($\alpha \in \{con, su, ru, Ql\}$) of unit i ($i \in \{N^{CHPa}, N^{CHPb}, N^{HOB}, N^{HPa}, N^{HPb}, N^{TS}\}$) at time t [€]
$C_i^{tot}(t)$	Total operation costs of unit i at time t ($i \in \{N^{CHPa}, N^{CHPb}, N^{HOB}, N^{HPa}, N^{HPb}, N^{TS}\}$) [€]
C^{net}	Net operation costs [€]
$CO_2(t)$	Total CO_2 emissions at time t [kg]
$n_i^{ru}(t)$	COP ramp-up reduction factor of unit i ($i \in \{N^{HPa}, N^{HPb}\}$) at time t [-]
$\dot{m}_i(t)$	Mass flow of water in unit i ($i \in N^{TS}$) [kg/s]
$\dot{Q}_i(t)$	Heat output of production unit i ($i \in \{N^{CHPa}, N^{CHPb}, N^{HOB}, N^{HPa}, N^{HPb}\}$) at time t [MW]

$\dot{Q}_i^u(t)$	Heat flow of unit i ($i \in \{N^{HPa}, N^{HPb}\}$) from source u ($u \in \{ATW, rec, w\}$) at time t [MW]
$\dot{Q}_i^h(t)$	Heat flow of unit i ($i \in N^{TS}$) in direction h ($h \in \{in; out; in, HP\}$) at time t [MW]
$\dot{Q}_{ij}^{in,HP}(t)$	Heat flow from unit j to unit i ($j \in N^{HPa}, i \in N^{TS}$) at time t [MW]
$\dot{Q}_i^{in,HP,tot}(t)$	Total heat flow from HP units to unit i ($i \in N^{TS}$) at time t [MW]
$R_i^E(t)$	Revenue from electricity sales of unit i ($i \in \{N^{CHPa}, N^{CHPb}\}$) at time t [€]
$y_i(t)$	Status variable for production unit i ($i \in \{N^{CHPa}, N^{CHPb}, N^{HOB}, N^{HPa}, N^{HPb}\}$) at time t [-]
$y_i^h(t)$	Status of heat flow in direction h ($h \in \{in; out; in, HP\}$) in unit i ($i \in N^{TS}$) at time t [-]
$y_i^{h,su}(t)$	Start-up variable for heat flow in direction h ($h \in \{in, out\}$) in unit i ($i \in N^{TS}$) at time t [-]
$y_i^{su}(t)$	Start-up variable for production unit i ($i \in \{N^{CHPa}, N^{CHPb}, N^{HOB}, N^{HPa}, N^{HPb}\}$) at time t [-]
$y_{ij}^{in,HP}(t)$	Status variable for heat flow from j to unit i ($j \in N^{HPa}, i \in N^{TS}$) at time t [-]
$y_i^{in,HP,tot}(t)$	Status variable for total heat flow HP units to unit i ($i \in N^{TS}$) at time t [-]

Parameters and Constants

a^{2nd}	Second law efficiency estimation coefficient [1/°C]
a^w	Waste heat flow estimation coefficient [1/°C]
b^{2nd}	Second law efficiency estimation coefficient [-]
b^w	Waste heat flow estimation coefficient [-]
β_i	Heat loss coefficient in unit i ($i \in N^{TS}$) [-]
c_{water}	Water specific heat capacity [MJ/kg/°C)]
$COP_i(t)$	COP of unit i ($i \in \{N^{HPa}, N^{HPb}\}$) at time t [-]
$COP_i^{Lorenz}(t)$	Lorenz COP of unit i ($i \in \{N^{HPa}, N^{HPb}\}$) at time t [-]
d_i	Diameter of the water column in unit i ($i \in N^{TS}$) [m]
$\delta_i(t)$	Heat loss coefficient in unit i ($i \in N^{TS}$) at time t[MWh]
Δt	Simulation time interval [min]
$\Delta\bar{T}_i^{lift}(t)$	Mean temperature lift of unit i ($i \in \{N^{HPa}, N^{HPb}\}$) at time t [°C]
$\dot{E}_i$	Electrical power flowing through unit i ($i \in N^{ES}$) [MW]
ε	Small number coefficient [-]
η_i^r	Efficiency of production unit i ($i \in \{N^{CHPa}, N^{CHPb}, N^{HOB}\}$) for action r ($r \in \{Q, E\}$) [-]
η_i^h	Efficiency of heat transfer of unit i ($i \in N^{TS}$) in direction h ($h \in \{in, out\}$) [-]
$\eta_i^{2nd}(t)$	Second law efficiency of unit i ($i \in \{N^{HPa}, N^{HPb}\}$) at time t [-]
$\gamma_i(t)$	Heat loss coefficient for unit i ($i \in N^{TS}$) at time t [-]
lvl_i^{max}	Maximum level of charge in unit i ($i \in N^{TS}$) [-]
lvl_i^{min}	Minimum level of charge in unit i ($i \in N^{TS}$) [-]
μ	Achievable ATW capacity estimation coefficient [1/°C]
$n_i^{ru,max}$	Maximum value for COP reduction during ramp-up for unit i ($i \in \{N^{HPa}, N^{HPb}\}$) [-]
ω	Carbon footprint of electricity bought from the grid [kg CO_2/MWh]
$p^E(t)$	Price of electricity in the day-ahead market at time t [€/MWh]
$p_{buy}^{E,tr}$	Transmission price for buying electricity from the grid [€/MWh]

$p_{sell}^{E,tr}$	Transmission price for selling electricity to the grid [€/MWh]
$p_i^f(t)$	Wholesale price of fuel for unit i ($i \in \{N^{CHPa}, N^{CHPb}, N^{HOB}\}$) at time t [€/MWh]
$p_i^{f,tax}$	Tax of fuel for unit i ($i \in \{N^{CHPa}, N^{CHPb}, N^{HOB}\}$) [€/MWh]
$p_i^{f,tr}$	Transmission price of fuel for unit i ($i \in \{N^{CHPa}, N^{CHPb}, N^{HOB}\}$) [€/MWh]
p^Q	Price of heat [€/MWh]
p_i^{su}	Price of starting production unit i ($i \in \{N^{CHPa}, N^{CHPb}, N^{HOB}, N^{HPa}, N^{HPb}\}$) [€]
$p_i^{su,h}$	Price of starting heat transfer to direction h ($h \in \{in, out\}$) in unit i ($i \in N^{TS}$) [€]
ψ_i	Carbon footprint of fuel for unit i ($i \in \{N^{CHPa}, N^{CHPb}, N^{HOB}\}$) [kg CO_2/MWh]
$\dot{Q}_i^{ATW,max}(t)$	Theoretical maximum heat output of unit i ($i \in N^{HPa}$) in ATW mode at time t [MW]
$\dot{Q}^d(t)$	Thermal demand at time t [MW]
$\dot{Q}_i^{max}$	Maximum heat output of production unit i ($i \in \{N^{CHPa}, N^{CHPb}, N^{HOB}, N^{HPa}, N^{HPb}\}$) [MW]
Q_i^{max}	Maximum heat storage capacity of unit i ($i \in N^{TS}$) [MWh]
$\dot{Q}_i^{min}$	Minimum heat output of production unit i ($i \in \{N^{CHPa}, N^{CHPb}, N^{HOB}, N^{HPa}, N^{HPb}\}$) [MW]
$\dot{Q}_i^{h,max}$	Maximum heat transfer rate in direction h ($h \in \{in, out\}$) in unit i ($i \in N^{TS}$) [MW]
$\dot{Q}_i^{h,min}$	Minimum heat transfer rate in direction h ($h \in \{in, out\}$) in unit i ($i \in N^{TS}$) [MW]
ρ_{water}	Water density [kg/m^3]
rdt_i	Ramp-down time of production unit i ($i \in \{N^{CHPa}, N^{CHPb}, N^{HOB}, N^{HPa}, N^{HPb}\}$) [min]
rut_i	Ramp-up time of production unit i ($i \in \{N^{CHPa}, N^{CHPb}, N^{HOB}, N^{HPa}, N^{HPb}\}$) [min]
$T^0(t)$	Outside air temperature at time t [°C]
$T_i^{ATW,min}$	Minimum outside air temperature for ATW mode in production unit i ($i \in N^{HPa}$) [°C]
T_i^C	Cold zone temperature in unit i ($i \in N^{TS}$) [°C]
$T^{C,new}$	New cold zone temperature in unit i ($i \in N^{TS}$) [°C]
T_i^H	Hot zone temperature in unit i ($i \in N^{TS}$) [°C]
$T_i^\theta(t)$	Temperature in node θ ($\theta \in \{sink, in; sink, out; source, in; suorce, out\}$) in unit i ($i \in \{N^{HPa}, N^{HPb}\}$) at time t [K]
$\bar{T}_i^{sink}(t)$	Thermodynamic mean heat sink temperature in production unit i ($i \in \{N^{HPa}, N^{HPb}\}$) at time t [K]
$\bar{T}_i^{source}(t)$	Thermodynamic mean heat source temperature in production unit i ($i \in \{N^{HPa}, N^{HPb}\}$) at time t [K]
U_i	Thermal transmittance of unit i ($i \in N^{TS}$) [MW/m^2/°C

1. MODEL INTRODUCTION

This mixed integer linear programming (MILP) model inspects power systems consisting of heat pumps (HP), combined heat and power (CHP) units, heat-only boilers (HOB), and thermal storage (TS) units. A more detailed topology description is given in Section 2. The HPs, CHP units and HOBs are used to generate heat to fulfil thermal demand, e.g. for district heating or an industrial process. Moreover, electricity produced by the CHP units is sold in the day-ahead energy market. The TS units are used to provide flexibility for heat generation.

The proposed model incorporates economic dispatch and unit commitment principles and determines an optimal power dispatch schedule for fulfilling thermal demand as well as maximizing electricity trading in the day-ahead energy market while satisfying all operation constraints. The optimization is done based on historical data, and the model is aimed to be an analysis tool for optimal power system operation rather than an operational tool for power system operators. However, the model is highly modular and can be developed to be used as an operational tool. The model is coded in Python using the Pyomo optimization language.

Required input data for the model includes but is not limited to:

- length of simulation time interval and number of timesteps
- historical data
    - electricity spot price and transmission prices
    - thermal demand
    - fuel prices for CHP and HOB units including taxes
    - outside air temperature
    - HP temperatures if deemed necessary
- production unit properties
    - maximum and minimum heat generation capacities
    - ramp-up and ramp-down times
    - System temperatures for HPs used for COP estimation

- TS temperatures and storage tank dimensions
- approximate estimations on start-up prices

Analysis based on the results of the model can be used to assess power system operation by identifying bottlenecks, largest cost and revenue sources, or optimal operation patterns. It can also be used to inspect changes in power system topology by simulating different scenarios. These results can then give insight into the profitability of possible investments. Simulating different extreme weather or price scenarios can also offer information on how the system can perform in abnormal circumstances.

The model consists of a total of four files:

1. Input data Excel file, which contains all time series input data (electricity and gas spot prices, thermal demand, outside air temperature, and HP temperatures if deemed necessary)
2. Input data Python file that contains all manually inputted parameters such as unit capacities and ramp-up times.
3. Optimizer Python file that contains the Pyomo model of the power system.
4. Simulation results Excel file that is created by the optimizer Python file.

All four given files are filled with dummy data for an example simulation.

2. PROBLEM DESCRIPTION

A schematic diagram for the power system considered in this model is shown in Figure 1. For simplicity, Figure 1 displays a system with one of each unit.

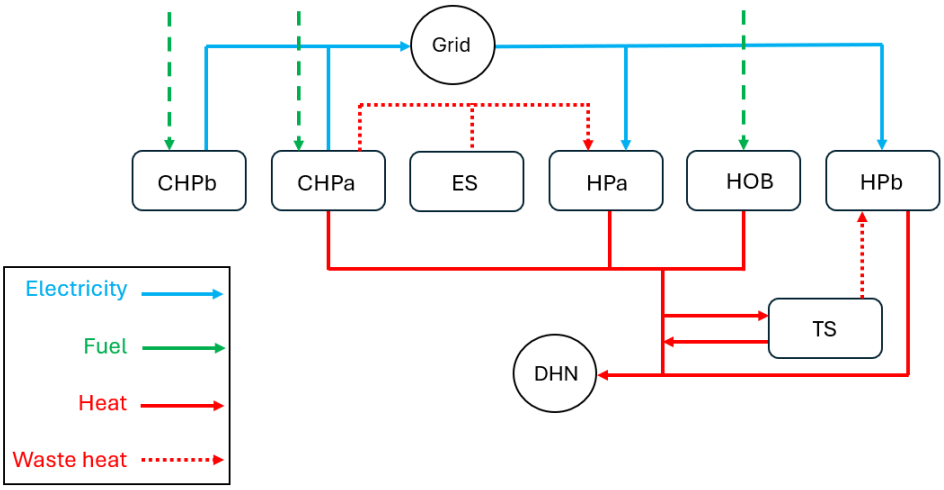

Figure 1. *Schematic diagram of the considered power system*

The TS units in the power system are assumed to use unpressurized water as the medium for storing sensible heat and they are modelled with a perfectly stratified two-zone model. In this model, at the top of the storage is the hot zone and at the bottom the cold zone that are assumed to have constant temperatures. When a TS unit is charged, cold water is taken from the bottom, heated, and circulated back into the top of the storage. During discharging, hot water is taken from the top of the storage, cooled down, and circulated back to the bottom of the storage. The storage capacity of a TS unit depends on the temperature difference between hot and cold zones (Oemof, 2019).

The proposed model includes two types of CHP units. CHP units in set N^{CHPa} (CHPa units) produce both heat to fulfill the thermal demand and electricity for trading in the day-ahead market whereas units in set N^{CHPb} (CHPb units) are not connected to the district heating network (DHN), and the generated heat is not recovered during their operation. Therefore, CHPb are used only for electricity generation during high electricity prices to maximize profits. In the considered power system, HPs are connected to other units using two different configurations. A HP in set N^{HPa} (HPa unit) represents a configuration where it is used to recover and upgrade waste heat from CHPa units and the electrical storage (ES) units. The ES units are included in the model only as a source of waste heat for HPa units. CHPa units that are not connected with a HPa unit can also be included in the model. The heat output of HPa units is either used to fulfill the thermal

demand or charged into TS units. On the other hand, a HP in set N^{HPb} (HPb unit) is integrated with a TS unit in order to increase its storage capacity and maximum charge rate by decreasing the cold zone temperature. During the discharge of heat from a TS unit, a HPb unit extracts heat from the water circulating back to the storage to cool it down further, which increases the temperature difference between the hot and cold zones in the TS unit, thus increasing the storage capacity. Heat output of a HPb unit is used only to fulfill the thermal demand, as they cannot charge the storage they are integrated with.

The proposed model is subjected to assumptions, which are given as follows:

1. HPa units have two operation modes: waste heat recovery (WHR) from CHP and ES units, and air-to-water (ATW) operation where heat is extracted from outside air. ATW mode can be utilized only when outside temperature is above 0 °C or another specified temperature. Both WHR and ATW modes can be used simultaneously.
2. If the sink outlet temperature of a HPa unit is lower than the hot zone temperature in a TS unit, it cannot charge the TS unit alone. It can charge the TS unit only if CHP or HOB units are charging the TS unit at the same time to provide sufficient temperatures.
3. The coefficient of performance (COP) for all HPs is reduced during ramp-up phases (Averfalk et al., 2014; Waddicor et al., 2016). Furthermore, COP estimations based on a single stage model are sufficient approximations for two-stage configurations (Ommen et al., 2019), and therefore all HPs are modelled as single stage systems. Effects of part-load operation on COP are negligible.
4. All generated waste heat is not recoverable by the HPa units as some of it is absorbed by the buildings depending on outside air temperature.
5. The batteries in the ES are constantly charging and discharging due to participation in the reserve markets, thus providing a constant flow of waste heat. The constant operation is approximated by a fixed electricity flow through an ES unit at all times.
6. During charging and discharging of a TS unit, some of the heat is lost. Heat also leaks out from a TS unit relative to level of charge when the storage is idle.
7. CHP and HOB units use organic matter such as natural gas or biomass as fuels. Natural gas is considered to be pure methane. The combustion of fuel is complete, meaning there is no leftover fuel after combustion, and that the reaction

produces only carbon dioxide and water, in addition to heat (Sadaka & Johnson, 2010). The model considers only carbon emissions caused during normal unit operation.

8. All CHP units are used for electricity trading only on the day ahead market.
9. All heat production units are in perfect operating condition, always available, and able to generate any heat flows between their allowable limits. The heating output is assumed to increase linearly during ramp-up and decrease linearly during ramp-down (Meesenburg, 2020). Excluding HPs, all units have constant efficiencies.
10. The thermal demand is perfectly fulfilled at each timestep. No heat is stored in the DHN.
11. There are no uncertainties in forecasts for thermal demand, electricity and fuel prices, or outside air temperature.
12. Costs related to producing mass flows of water and fuel are not considered.
13. Revenue gained from selling heat is not considered.
14. In order to reach sufficient cold zone temperature, the capacity and COP of a HPb unit limit the discharge rate of the TS unit.

3. MODEL FORMULATION

3.1 Production unit start-up and ramping

To indicate the operational state of heat production unit i at time t, a binary variable $y_i(t)$ is used. For each heat production unit, a start-up binary variable $y_i^{su}(t)$ indicates the timestep when the unit is turned on, as given in Equation (1). Frequent start-ups and shutdowns of heat production units cause increased thermal and mechanical stress on the unit, which leads to increased maintenance costs (Aliasghari et al., 2026; Lindahl et al., 2023; Waddicor et al., 2016). Therefore, to prevent unnecessary starting and stopping of the units, a fixed price p_i^{su} is assigned for the start-up of a unit, as given in Equation (2), which simultaneously acts as a soft constraint for minimum run times.

$$y_i^{su}(t) \geq y_i(t) - y_i(t-1), \qquad t \in N^t, i \in \{N^{CHPa}, N^{CHPb}, N^{HOB}, N^{HPa}, N^{HPb}\} \tag{1}$$

$$C_i^{su}(t) = y_i^{su}(t) \cdot p_i^{su}, \qquad t \in N^t, i \in \{N^{CHPa}, N^{CHPb}, N^{HOB}, N^{HPa}, N^{HPb}\} \tag{2}$$

The operation ranges, i.e. achievable minimum and maximum power outputs for the heat producing units are enforced with a hard constraint, as given in Equation (3), where $\dot{Q}_i^{max}$ and $\dot{Q}_i^{min}$ are the maximum and minimum achievable heat outputs of unit i. The achievable ramp-up and ramp-down rates for a heat production unit are defined as the ratio of maximum heat output and estimated ramp-up and ramp-down times rut_i and rdt_i, as given in Equations (4) and (5). Here $\dot{Q}_i(t)$ represents the heat output of unit i (in MW) and Δt signifies simulation time interval in hours.

$$y_i(t) \cdot \dot{Q}_i^{min} \leq \dot{Q}_i(t) \leq y_i(t) \cdot \dot{Q}_i^{max}, \quad t \in N^t, i \in \{N^{CHPa}, N^{CHPb}, N^{HOB}, N^{HPa}, N^{HPb}\} \tag{3}$$

$$\dot{Q}_i(t) - \dot{Q}_i(t-1) \leq \frac{\dot{Q}_i^{max}}{rut_i} \cdot \Delta t, \qquad t \in N^t, i \in \{N^{CHPa}, N^{CHPb}, N^{HOB}, N^{HPa}, N^{HPb}\} \tag{4}$$

$$\dot{Q}_i(t-1) - \dot{Q}_i(t) \leq \frac{\dot{Q}_i^{max}}{rdt_i} \cdot \Delta t, \qquad t \in N^t, i \in \{N^{CHPa}, N^{CHPb}, N^{HOB}, N^{HPa}, N^{HPb}\} \tag{5}$$

3.2 Heat pump model

The costs of HP operation arise mainly from the electricity consumption $C_i^{con}(t)$, as given in Equation (6). Here $p^E(t)$ and $p_{buy}^{E,tr}$ denote the electricity spot price in the day-ahead market and the transmission price of buying electricity from the grid in €/MWh.

$$C_i^{con}(\mathrm{t}) = \left(p^E(t) + p_{buy}^{E,tr}\right) \cdot \frac{1}{COP_i(t)} \cdot \dot{Q}_i(t) \cdot \Delta t, \qquad t \in N^t, i \in \{N^{HPa}, N^{HPb}\} \tag{6}$$

COP is a key factor in modelling the efficiency and costs related to a HP (Jensen et al., 2018). To consider the variation in heat sink and source temperatures, the COP is calculated through the multiplication of the ideal Lorenz COP and a second law efficiency factor $\eta_i^{2nd}(t)$. In order to keep linearity, the COP is precalculated as a parameter, as given in Equation (7).

$$COP_i(t) = \eta_i^{2nd}(t) \cdot COP_i^{Lorenz}(t), \qquad t \in N^t, i \in \{N^{HPa}, N^{HPb}\} \tag{7}$$

With constant heat capacities in the heat source and sink, the theoretical maximum Lorenz COP can be calculated with Equation (8). The calculation for the thermodynamic mean temperatures for the heat sink $\bar{T}_i^{sink}(t)$ and source $\bar{T}_i^{source}(t)$ are calculated with Equations (9) and (10), respectively. The temperature lift $\Delta\bar{T}_i^{lift}(t)$ is defined as the difference between the thermodynamic mean temperatures of the heat sink and source as given in Equation (8). In Equation (9), $T_i^{sink,in}(t)$ and $T_i^{sink,out}(t)$ are the temperatures of the heated stream's inlet and outlet. Similarly in Equation (10), $T_i^{source,in}(t)$ and $T_i^{source,out}(t)$ are the temperatures of the cooled stream's inlet and outlet (Zühlsdorf et al., 2023).

$$COP_i^{Lorenz}(\mathrm{t}) = \frac{\bar{T}_i^{sink}(t)}{\bar{T}_i^{sink}(t) - \bar{T}_i^{source}(t)} = \frac{\bar{T}_i^{sink}(t)}{\Delta\bar{T}_i^{lift}(t)}, \qquad t \in N^t, i \in \{N^{HPa}, N^{HPb}\} \tag{8}$$

$$\bar{T}_i^{sink}(t) = \frac{T_i^{sink,out}(t) - T_i^{sink,in}(t)}{ln\left(\frac{T_i^{sink,out}(t)}{T_i^{sink,in}(t)}\right)}, \qquad t \in N^t, i \in \{N^{HPa}, N^{HPb}\} \tag{9}$$

$$\bar{T}_i^{source}(t) = \frac{T_i^{source,in}(t) - T_i^{source,out}(t)}{ln\left(\frac{T_i^{source,in}(t)}{T_i^{source,out}(t)}\right)}, \qquad t \in N^t, i \in \{N^{HPa}, N^{HPb}\} \tag{10}$$

The second law efficiency $\eta_i^{2nd}(t)$ describes the portion of the theoretically achievable thermal power that is applied to perform the heating task in practice (Zühlsdorf et al., 2023), and it varies based on the mean temperature lift (Magni et al., 2024), as given in Equation (11). Here a^{2nd} and b^{2nd} are coefficients representing the assumed linear relation between $\eta_i^{2nd}(t)$ and $\Delta\bar{T}_i^{lift}(t)$.

$$\eta_i^{2nd}(t) = a^{2nd} \cdot \Delta\bar{T}_i^{lift}(t) + b^{2nd}, \qquad t \in N^t, i \in \{N^{HPa}, N^{HPb}\} \tag{11}$$

The reduced COP during ramp-up is indicated with a variable $n_i^{ru}(t)$ that represents the relative reduction in COP. This $n_i^{ru}(t)$ depends on the difference of a HP heat output

between two consecutive timesteps, as given in Equation (12). The maximum value for $n_i^{ru}(t)$, as represented by $n_i^{ru,max}$, is reached when a HP is ramping up at maximum allowed rate.

$$n_i^{ru,max} \cdot rut_i \cdot \frac{\dot{Q}_i(t) - \dot{Q}_i(t-1)}{\dot{Q}_i^{max} \cdot \Delta t} \leq n_i^{ru}(t) \leq n_i^{ru,max}, \qquad t \in N^t, i \in \{N^{HPa}, N^{HPb}\} \quad (12)$$

As COP is precalculated, its reduction is represented by introducing additional ramp-up costs $C_i^{ru}(t)$ that depend on $n_i^{ru}(t)$. With low values of $n_i^{ru,max}$ (< 0.4), the ramp up costs are estimated using a linear expression, as given in Equation (13). During linear ramping from 0% to 100% power, the average heating output of a HP is half of the maximum power $\dot{Q}_i^{max}$. Hence, in Equation (13), in order to keep linearity, heat output during ramp-up is approximated as half of the maximum achievable heat output.

$$C_i^{ru}(t) = \left(p^E(t) + p_{buy}^{E,tr}\right) \cdot \frac{1.16 \cdot n_i^{ru,max} + 0.97}{COP_i(t)} \cdot n_i^{ru}(\mathrm{t}) \cdot \frac{\dot{Q}_i^{max}}{2} \cdot \Delta t, \quad t \in N^t, i \in \{N^{HPa}, N^{HPb}\} \quad (13)$$

A HPa unit recovers waste heat from a subset of CHPa untis as well as the ES units. Only the ES units that are utilized for WHR are included in the model. The available waste heat flow for recovery is estimated as given in Equation (14). The amount of available waste heat is assumed to be linearly dependent on outside air temperature $T^0(t)$, where a^w and b^w represent the coefficients of the linear relation. As $T^0(t)$ decreases, more heat is absorbed by the CHPa and ES vicinity. This model focuses on flexible HP operation, and therefore recovering all available waste heat is not enforced with a hard constraint but rather encouraged by adding a penalty term to the total costs of a HPa units. The penalty represents the cost of available waste heat that is not recovered, as given in Equation (15), where p^Q is the assigned constant price for heat.

$$\dot{Q}_i^{rec}(t) \leq \dot{Q}_i^w(t) = \left(\sum_{j \in N'^{CHP}} \left(\left(1 - \eta_j^E - \eta_j^Q\right) \cdot \frac{\dot{Q}_j(t)}{\eta_j^Q} \right) + \sum_{k \in N'^{ES}} (1 - \eta_k) \cdot \dot{E}_k \right) \cdot (a^w \cdot T^0(t) + b^w), \quad t \in N^t, i \in N^{HPa}, N'^{CHP} \subseteq N^{CHP}, N'^{ES} \subseteq N^{ES} \quad (14)$$

$$C_i^{Ql}(t) = p^Q \cdot \left(\dot{Q}_i^w(t) - \dot{Q}_i^{rec}(t)\right) \cdot \Delta t, \qquad \forall t \in N^t, \forall i \in N^{HPa} \quad (15)$$

ATW operation is modelled as a separate action with its own COP that is calculated as given in Equations (8)–(11), with $T^0(t)$ in place of $\bar{T}_i^{source}(t)$. In ATW mode, a HPa unit can achieve only a portion of their theoretical maximum capacity $\dot{Q}_i^{ATW,max}$ based on $T^0(t)$ and a coefficient μ, as given in Equation (16). Here, μ describes the level of impact $T^0(t)$ has on the achievable ATW capacity. ATW mode can be used only when outside

air temperature is above a selected minimum temperature $T_i^{ATW,min}$, which is at the lowest 0°C. The total heating output of a HPa unit consists of the sum of WHR and upgrading (Jovet et al., 2022; Walden et al., 2023), as well as ATW operation, as given in Equation (17). In order to maintain sufficient COP in ATW mode, it is utilized only when outside air temperature exceeds the defined minimum temperature $T_i^{ATW,min}$.

$$\dot{Q}_i^{ATW}(t) \leq \dot{Q}_i^{ATW,max} \cdot \left(1 - \exp\left(-\mu \cdot T^0(t)\right)\right), \quad T^0(t) \geq T_i^{ATW,min} \geq 0\ °\mathrm{C}, t \in N^t, i \in N^{HPa} \tag{16}$$

$$\dot{Q}_i(t) = \frac{COP_i(t) \cdot \dot{Q}_i^{rec}(t)}{COP_i(t) - 1} + \dot{Q}_i^{ATW}(t), \qquad t \in N^t, i \in N^{HPa} \tag{17}$$

3.3 Thermal storage coupled with a HP

The schematic diagram of a TS unit is shown in Figure 2(a) and Figure 2(b) displays the integration of HPb j with TS unit i. The cumulative stored heat in a TS unit is calculated as given in Equation (18). Here, $Q_i(t)$ is the stored heat in the TS at time t in MWh, Q_i^{max} is the theoretical maximum capacity of the TS unit, and $\dot{Q}_i^{out}(t)$ represents the heat flows discharged out of a TS unit in MW. $\dot{Q}_i^{in}(t)$ represents heat from HOB and CHPa units that is charged into a TS unit. To address possible limited temperature lifts in HPs, the charging of a TS unit i with HPa units is modelled using a separate variable $\dot{Q}_i^{in,HP,tot}(t)$. Moreover, heat recovered by HPb unit j, $\dot{Q}_j^{rec}(t)$, is extracted from the TS through return water. The losses during charging and discharging are modelled with efficiencies η_i^{in} and η_i^{out}. The maximum and minimum allowed levels of charge in a TS are constrained by Equation (19), where lvl_i^{max} and lvl_i^{min} are the maximum and minimum allowed percentages of the level of charge in a TS unit. The allowed charge levels are represented by the dashed lines in Figure 2.

$$Q_i(t) = Q_i(t-1) \cdot (1 - \beta_i) - \gamma_i(t) \cdot Q_i^{max}(t) - \delta_i(t) + \left(\left(\dot{Q}_i^{in}(t) + \dot{Q}_i^{in,HP,tot}(t)\right) \cdot \eta_i^{in} - \frac{\dot{Q}_i^{out}(t) + \dot{Q}_j^{rec}(t)}{\eta_i^{out}}\right) \cdot \Delta t, \quad t \in N^t, i \in N^{TS}, j \in N^{HPb} \tag{18}$$

$$Q_i^{max} \cdot lvl_i^{min} \leq Q_i(t) \leq Q_i^{max} \cdot lvl_i^{max}, \qquad t \in N^t, i \in N^{TS} \tag{19}$$

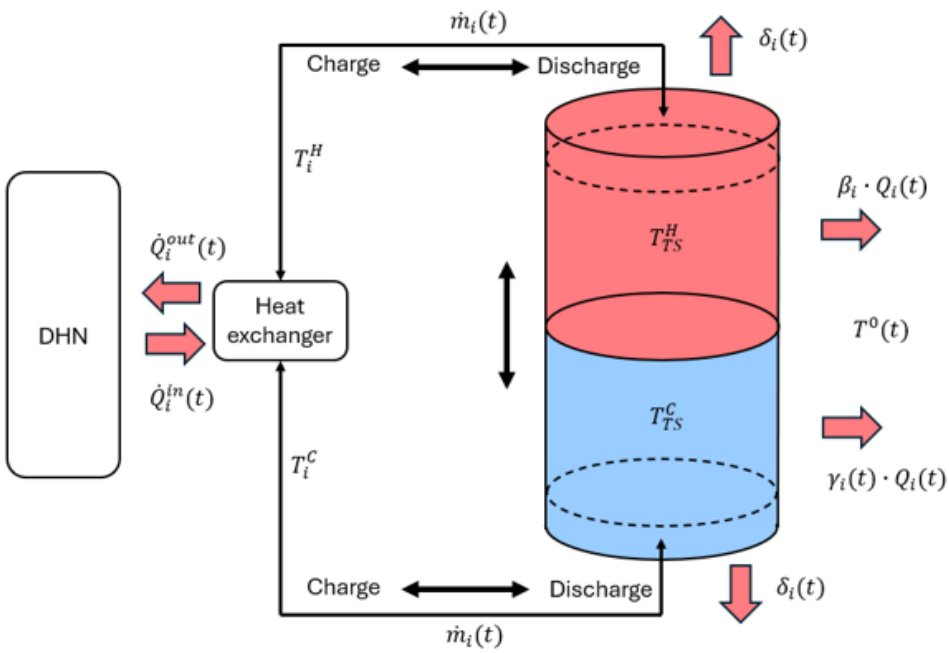

a) TS unit i schematic diagram

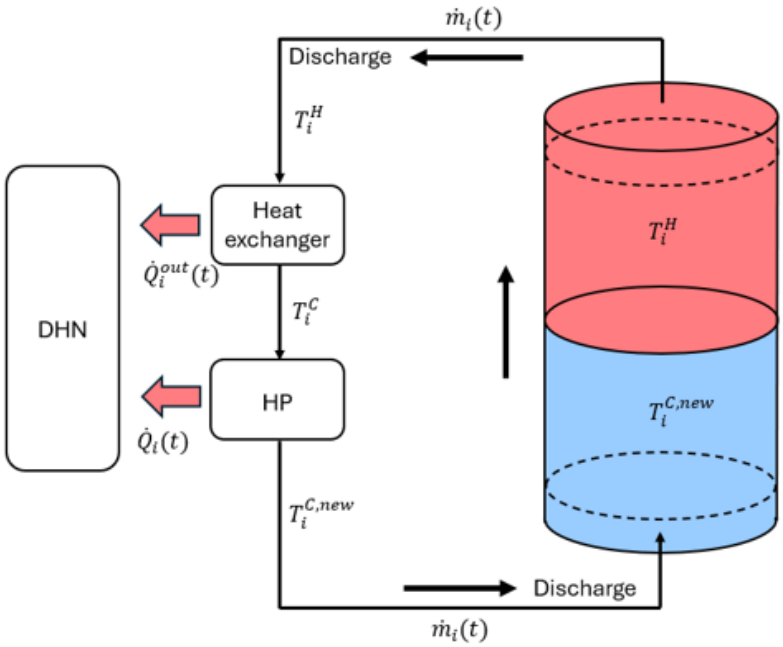

b) TS unit i heat discharge with a HP

Figure 2. *Schematic diagram of a simplified model for a stratified TS unit* $\boldsymbol{i}$ *with two perfectly separated bodies of water at temperatures* $\boldsymbol{T_i^C}$ *and* $\boldsymbol{T_i^H}$*, and outside temperature of* $\boldsymbol{T^0(t)}$*. Modified from (Oemof, 2019)*

For TS unit i, variable $y_i^{in}(t)$ indicates the state charging through heat from the HOB and CHPa units and $y_i^{in,HP,tot}(t)$ indicates the state of charging though HPa units. $y_i^{in,su}(t)$ indicates the timestep when TS unit i charging is activated, as given in Equation

(20). $y_i^{in,su}(t)$ activates only if either $y_i^{in}(t)$ or $y_i^{in,HP,tot}(t)$ activate after both being inactive during the previous timestep. If the heat sink outlet temperature in a HPa unit j is lower than the hot zone temperature in TS unit i, it cannot charge the TS unit alone, but it can contribute to the charging if other heat production is available through the CHPa and HOB units, as given in Equation (21). Hence, the charging of TS unit i with HPa unit j is modelled with separate variables $y_{ij}^{in,HP}(t)$ and $\dot{Q}_{ij}^{in,HP}(t)$ that are defined for each possible HPa and TS pairing. Equation (22) ensures that $y_i^{in,HP,tot}(t)$ can activate only if any of $y_{ij}^{in,HP}(t)$ are active.

$$y_i^{in,su}(t) \geq 0.25 \cdot \left(y_i^{in}(t) + y_i^{in,HP,tot}(t)\right) - 0.5 \cdot \left(y_i^{in}(t-1) + y_i^{in,HP,tot}(t-1)\right), \quad t \in N^t, i \in N^{TS} \tag{20}$$

$$y_{ij}^{in,HP}(t) \leq y_i^{in}(t), \qquad T_i^H > T_j^{sink,out}(t), \quad t \in N^t, i \in N^{TS}, j \in N^{HPa} \tag{21}$$

$$y_i^{in,HP,tot}(t) \leq \sum_{j \in N^{HPa}} y_{ij}^{in,HP}(t), t \in N^t, i \in N^{TS} \tag{22}$$

The total heat flow from HPa units to a TS unit is given in Equation (23). The amount of heat from a HPa unit i that can be charged into TS units is limited by its total heat generation, as given in Equations (24). Equation (25) enforces the tracking of HPa unit status. The total amount of heat from HPa units that is charged into TS unit i is limited by the TS charging limitations, as given in Equation (26). The charging of a TS unit with heat from CHPa and HOB units is limited by their total heat generation, and the charging limitations of the TS unit as given in Equations (27) and (28), respectively. The sum of the two charging streams is also constrained by TS charging limitations, as given in Equation (29).

$$\dot{Q}_i^{in,HP,tot} = \sum_{j \in N^{HPa}} \dot{Q}_{ij}^{in,HP}(t), \qquad t \in N^t, i \in N^{TS} \tag{23}$$

$$\sum_{i \in N^{TS}} \dot{Q}_{ij}^{in,HP}(t) \leq \dot{Q}_j(t), \qquad t \in N^t, j \in N^{HPa} \tag{24}$$

$$y_{ij}^{in,HP} \cdot \dot{Q}_j^{min}(t) \leq \dot{Q}_{ij}^{in,HP}(t) \leq y_{ij}^{in,HP} \cdot \dot{Q}_j^{max} \cdot, \quad t \in N^t, i \in N^{TS}, j \in N^{HPa} \tag{25}$$

$$y_i^{in,HP,tot}(t) \cdot \dot{Q}_i^{in,min} \leq \dot{Q}_i^{in,HP,tot}(t) \leq y_i^{in,HP,tot}(t) \cdot \dot{Q}_i^{in,max}, \qquad t \in N^t, i \in N^{TS} \tag{26}$$

$$\sum_{i \in N^{TS}} \dot{Q}_i^{in}(t) \leq \sum_{i \in N^{CHPa}} \dot{Q}_i(t) + \sum_{i \in N^{HOB}} \dot{Q}_i(t), \qquad t \in N^t \tag{27}$$

$$y_i^{in}(t) \cdot \dot{Q}_i^{in,min} \leq \dot{Q}_i^{in}(t) \leq y_i^{in}(t) \cdot \dot{Q}_i^{in,max}, \qquad t \in N^t, i \in N^{TS} \tag{28}$$

$$\dot{Q}_i^{in,HP,tot}(t) + \dot{Q}_i^{in}(t) \leq \dot{Q}_i^{in,max}, \qquad t \in N^t, i \in N^{TS} \tag{29}$$

Total heat discharge from TS unit i consisting of $\dot{Q}_i^{out}(t)$ and $\dot{Q}_j^{rec}(t)$ is limited by the cumulative heat stored in a TS unit, as given in Equation (30). Heat discharge before the HPb unit, $\dot{Q}_i^{out}(t)$, is limited by TS water circuit and heat exchanger properties, as given in Equation (31). The start-up of heat discharge from a TS unit is tracked, as given in Equation (32).

$$\left(\frac{\dot{Q}_i^{out}(t) + \dot{Q}_j^{rec}(t)}{\eta_i^{out}}\right) \cdot \Delta t \leq Q_i(t), \qquad t \in N^t, i \in N^{TS}, j \in N^{HPb} \tag{30}$$

$$y_i^{out}(t) \cdot \dot{Q}_i^{out,min} \leq \frac{\dot{Q}_i^{out}(t)}{\eta^{out}} \leq y_i^{out}(t) \cdot \dot{Q}_i^{out,max}, \qquad t \in N^t, i \in N^{TS} \tag{31}$$

$$y_i^{out,su}(t) \geq y_i^{out}(t) - y_i^{out}(t-1), \qquad t \in N^t, i \in N^{TS} \tag{32}$$

Heat is discharged from a TS unit by circulating hot water from the top of the TS unit through a heat exchanger where heat is extracted from the water, cooling it down, as displayed in Figure 2(b). At this point, $\dot{Q}_i^{out}(t)$ is transferred from the storage to the DHN, as given in Equation (33). The amount of heat that a HPb unit extracts from the water circulating back to the bottom of a TS unit is expressed in Equation (34). Solving the mass flow of water $\dot{m}_i(t)$ during discharging from Equation (33) and substituting it into Equation (34) yields the dependency of $\dot{Q}_j^{rec}(t)$ on $\dot{Q}_i^{out}(t)$, as given in Equation (35). The heat output of a HPb is dependent on $\dot{Q}_j^{rec}(t)$, as given in Equation (36) (Jovet et al., 2022; Walden et al., 2023). Defining $T_i^{C,new}$ as a constant value means that the maximum values for $\dot{Q}_i^{out}$ are constrained based on $T_i^{C,new}$ as well as the capacity and COP of the HPb. Substituting Equation (35) into Equation (36) and solving for $\dot{Q}_i^{out}(t)$ yields the dependency of $\dot{Q}_i^{out}(t)$ on the TS temperatures, as well as the COP and capacity of the integrated HPb unit, as given in Equation (37). With a lowered cold zone temperature in TS unit i, the heat storage capacity and maximum charge rate are increased by a factor of $\frac{T_i^H - T_i^{C,new}}{T_i^H - T_i^C}$.

$$\dot{Q}_i^{out}(t) = c_{water} \cdot \dot{m}_i(t) \cdot \left(T_i^H - T_i^C\right) \cdot \eta_i^{out}, \quad t \in N^t, i \in N^{TS} \tag{33}$$

$$\dot{Q}_j^{rec}(t) = c_{water} \cdot \dot{m}_i(t) \cdot \left(T_i^C - T_i^{C,new}\right) \cdot \eta_i^{out}, \quad t \in N^t, i \in N^{TS}, j \in N^{HPb} \tag{34}$$

$$\dot{Q}_j^{rec}(t) = \dot{Q}_i^{out}(t) \cdot \frac{T_i^C - T_i^{C,new}}{T_i^H - T_i^C}, \qquad t \in N^t, i \in N^{TS}, j \in N^{HPb} \tag{35}$$

$$\dot{Q}_j(t) = \frac{COP_j(t) \cdot \dot{Q}_j^{rec}(t)}{COP_j(t) - 1}, \qquad t \in N^t, j \in N^{HPb} \tag{36}$$

$$\dot{Q}_i^{out} \leq \frac{T_i^H - T_i^C}{T_i^C - T_i^{C,new}} \cdot \frac{\dot{Q}_j^{max} \cdot \left(COP_j(t) - 1\right)}{COP_j(t)}, \qquad t \in N^t, i \in N^{TS}, j \in N^{HPb} \tag{37}$$

Simultaneous charging and discharging of a TS unit are avoided by applying hard constraints, as given in Equations (38) and (39). In Equation (39), ε equates to a small number (e.g. 0.001). To prevent unnecessary charging and discharging, a fixed a start-up price $p_i^{h,su}$ is assigned for starting of the charging and discharging actions, as given in Equation (40). The ramping rates of $\dot{Q}_i^{out}(t)$, $\dot{Q}_i^{in}(t)$, and $\dot{Q}_i^{in,HP,tot}(t)$ are not considered and the model assumes that the maximum rates can be achieved instantaneously. However, $\dot{Q}_i^{out}(t)$ is indirectly constrained by the ramping rates of the integrated HPb unit.

$$y_i^{in}(t) + y_i^{out}(t) \leq 1, \qquad t \in N^t, i \in N^{TS} \tag{38}$$

$$\varepsilon \cdot \sum_{j \in N^{HPa}} y_{ij}^{in,HP}(t) + y_i^{out}(t) \leq 1, \qquad t \in N^t, i \in N^{TS} \tag{39}$$

$$C_i^{h,su}(t) = y_i^{h,su}(t) \cdot p_i^{h,su}, \qquad t \in N^t, h \in \{in, out\}, i \in N^{TS} \tag{40}$$

Heat loss factors β_i, $\gamma_i(t)$, and $\delta_i(t)$, introduced in Equation (18), represent passive losses in a TS unit through the lateral surface of the hot section of the water body depending on the state of charge, losses through the cold section of the water body assuming the storage is empty, and losses through the top and bottom surfaces of the water body. The loss factors are calculated as given in Equations (41)–(43), where U_i is the overall thermal transmittance, d_i is the water column diameter inside a TS unit, ρ_{water} is the water density, and c_{water} is the specific heat of water. If TS unit i is not connected with a HPb unit, the loss factors in Equations (41)–(43) are calculated with T_i^C in place of $T_i^{C,new}$. The penalty cost associated with the passive heat losses and losses during charging and discharging is expressed in Equation (44).

$$\beta_i = U_i \cdot \frac{4}{d_i \cdot \rho_{water} \cdot c_{water}} \cdot \Delta t, \qquad t \in N^t, i \in N^{TS} \tag{41}$$

$$\gamma_i(t) = U_i \cdot \frac{4 \cdot \left(T_i^{C,new} - T^0(t)\right) \cdot \Delta t}{d_i \cdot \rho_{water} \cdot c_{water} \cdot \left(T_i^H - T_i^{C,new}\right)}, \qquad t \in N^t, i \in N^{TS} \tag{42}$$

$$\delta_i(t) = U_i \cdot \frac{\pi \cdot d_i^2}{4} \left(\left(T_i^H - T^0(t)\right) + \left(T_i^{C,new} - T^0(t)\right)\right) \cdot \Delta t, \qquad t \in N^t, i \in N^{TS} \tag{43}$$

$$C_i^{Ql} = p^Q \cdot \left[\left(1-\eta_i^{in}\right)\cdot\left(\dot{Q}_i^{in}(t)+\dot{Q}_i^{in,HP,tot}(t)\right)+\left(\frac{1}{\eta_i^{out}}-1\right)\cdot\left(\dot{Q}_i^{out}+\dot{Q}_j^{rec}(t)\right)\right]\cdot\Delta t$$
$$+\,p^Q\cdot\left[Q_i(t-1)\cdot\beta_i+\gamma_i(t)\cdot Q_i^{max}+\ \delta_i(t)\right],\qquad t\in N^t, i\in N^{TS}, j\in N^{HPb} \tag{44}$$

3.4 Fuel consumption and electricity generation

The fuel consumption costs related to CHP and HOB units are calculated as given in Equation (45). Here, $p_i^f(t)$, $p_i^{f,tax}$, $p_i^{f,tr}$ are the wholesale price, the tax, and transmission price of fuel for unit i in €/MWh, and η_i^Q is the efficiency for heat generation. The revenue gained from selling electricity generated by the CHP units $R_i^E(t)$ is expressed in Equation (46), where $p_{sell}^{E,tr}$ is the transmission price of selling electricity to the grid in €/MWh. For CHPb units, due to no connection with the DHN, the generated but unutilized heat is penalized, as given in Equation (47).

$$C_i^{con}(t) = \left(p_i^f(t)+p_i^{f,tax}+p_i^{f,tr}\right)\cdot\frac{\dot{Q}_i(t)}{\eta_i^Q}\cdot\Delta t,$$
$$t\in N^t, i\in\{N^{CHPa}, N^{CHPb}, N^{HOB}\} \tag{45}$$

$$R_i^E(t) = \left(p^E(t)-p_{sell}^{E,tr}\right)\cdot\frac{\eta_i^E}{\eta_i^Q}\cdot\dot{Q}_i(t)\cdot\Delta t,\qquad t\in N^t, i\in\{N^{CHPa}, N^{CHPb}\} \tag{46}$$

$$C_i^{Ql}(t) = p^Q\cdot\dot{Q}_i(t)\cdot\Delta t,\qquad t\in N^t, i\in N^{CHPb} \tag{47}$$

3.5 Demand fulfillment and carbon emissions

The amount of required heat production at each timestep is dictated by the thermal demand $\dot{Q}^d(t)$, as given in Equation (48). The environmental impact of fulfilling the thermal demand is assessed by the resulting carbon dioxide emissions, as given in Equation (49). Emissions arise from the combustion of organic matter as fuel and the carbon footprint of electricity bought from the grid. In Equation (49), ψ_i represents the amount of carbon dioxide produced from using fuel in unit i based on the combustion stoichiometry (kg CO_2/MWh fuel) and ω represents the average carbon emissions (kg CO_2/MWh electricity) that originate from the production of electricity used to power the HPs.

$$\sum_{i\in N^{CHPa}}\dot{Q}_i(t)+\sum_{i\in N^{HPa}}\dot{Q}_i(t)+\sum_{i\in N^{HPb}}\dot{Q}_i(t)+\sum_{i\in N^{HOB}}\dot{Q}_i(t)$$
$$+\sum_{i\in N^{TS}}\left(\dot{Q}_i^{out}(\mathrm{t})-\dot{Q}_i^{in}(t)-\dot{Q}_i^{in,HP,tot}(t)\right)=\dot{Q}^d(t),\qquad t\in N^t \tag{48}$$

$$CO_2(t) = \left(\sum_{i \in N^{CHPa}} \frac{\dot{Q}_i(t)}{\eta_i^Q} \cdot \psi_i + \sum_{i \in N^{CHPb}} \frac{\dot{Q}_i(t)}{\eta_i^Q} \cdot \psi_i + \sum_{i \in N^{HOB}} \frac{\dot{Q}_i(t)}{\eta_i^Q} \cdot \psi_i \right) \cdot \Delta t$$
$$+ \left(\sum_{i \in N^{HPa}} \frac{\dot{Q}_i(t)}{COP_i(t)} + \sum_{i \in N^{HPb}} \frac{\dot{Q}_i(t)}{COP_i(t)} \right) \cdot \omega \cdot \Delta t, \qquad t \in N^t \tag{49}$$

3.6 Model objective

The total operation costs $C_i^{tot}(t)$ for unit i consist of the sum of different cost sources as given in Equation (50). The objective of the model is to minimize unit operation costs and maximize energy trading in the day-ahead market, as given in Equation (51).

$$C_i^{tot}(t) = \sum_{a \in \{con, su, ru, Ql\}} C_i^{\alpha}(t),$$
$$t \in N^t, i \in \{N^{CHPa}, N^{CHPa}, N^{HOB}, N^{HPa}, N^{HPb}, N^{TS}\} \tag{50}$$

$$\text{Min } C^{net} = \sum_{t=1}^{T} \left(\sum_{i \in N^{CHPa}} \left(C_i^{tot}(t) - R_i^E(t) \right) \right) +$$
$$\sum_{t=1}^{T} \left(\sum_{i \in N^{HPa}} C_i^{tot}(t) + \sum_{i \in N^{HPb}} C_i^{tot}(t) + \sum_{i \in N^{HOB}} C_i^{tot}(t) + \sum_{i \in N^{TS}} C_i^{tot}(t) \right) \tag{51}$$

4. TIPS FOR THE USER

It is important the minimum heat generation capacities for the heat production units ($\dot{Q}_i^{max}$)and the TS ($\dot{Q}_i^{in,max}$ and $\dot{Q}_i^{out,max}$) are not zero to ensure correct tracking of the status binary variables. Moreover, the minimum capacities cannot be too high either as it can lead to problems with ramping. The ramping from $0 \rightarrow \dot{Q}_i^{min}$ and $\dot{Q}_i^{min} \rightarrow 0$ must be able to happen within one simulation timestep. Therefore, the following relations must be satisfied in order for the model to be able to start and stop the units.

$$\frac{\dot{Q}_i^{max}}{rut_i} \geq \frac{\dot{Q}_i^{min}}{\Delta t}, \quad i \in \{N^{CHPa}, N^{CHPb}, N^{HOB}, N^{HPa}, N^{HPb}\}$$

$$\frac{\dot{Q}_i^{max}}{rdt_i} \geq \frac{\dot{Q}_i^{min}}{\Delta t}, \quad i \in \{N^{CHPa}, N^{CHPb}, N^{HOB}, N^{HPa}, N^{HPb}\}$$

REFERENCES

Aliasghari, P., Motamad, M. A., Egging-Bratseth, R., & Stålhane, M. (2026). Optimal scheduling of micro combined heat and power units: Impact of degradation costs. *Energy Conversion and Management*, *347*, Article 120522. https://doi.org/10.1016/j.enconman.2025.120522

Averfalk, H., Ingvarsson, P., Persson, U., & Werner, S. (2014). On the use of surplus electricity in district heating systems. Proceedings from the 14th International Symposium on District Heating and Cooling : September, 6-10, 2014: Stockholm, Sweden, 469–474. https://urn.kb.se/resolve?urn=urn:nbn:se:hh:diva-26714

Jensen, J. K., Ommen, T., Reinholdt, L., Markussen, W. B., & Elmegaard, B. (2018). Heat pump COP, part 2: Generalized COP estimation of heat pump processes. In *Proceedings of the13th IIR-Gustav Lorentzen Conference on Natural Refrigerants* (Vol. 2, pp. 1136-1145). International Institute of Refrigeration. https://doi.org/10.18462/iir.gl.2018.1386

Jovet, Y., Lefèvre, F., Laurent, A., & Clausse, M. (2022). Combined energetic, economic and climate change assessment of heat pumps for industrial waste heat recovery. *Applied Energy*, *313*, Article 118854. https://doi.org/10.1016/j.apenergy.2022.118854

Lindahl, M., Pedersen, S. V., Meesenburg, W., Spreitzhofer, J., Wernhart, M., Rieberer, R., Mascherbauer, P., Ortmann, P., & Bakker, M. (2023). *IEA HPT Annex 57: Flexibility by implementation of heat pumps in multi-vector energy systems and thermal networks - Task 4 report: Flexibility assessment and analyses of different options*. https://tugraz.elsevierpure.com/en/publications/iea-hpt-annex-57-flexibility-by-implementation-of-heat-pumps-in-m-2

Magni, C., Peeters, R., Quoilin, S., & Arteconi, A. (2024). Assessing the Flexibility Potential of Industrial Heat–Electricity Sector Coupling through High-Temperature Heat Pumps: The Case Study of Belgium. *Energies (Basel)*, *17*(2), 541. https://doi.org/10.3390/en17020541

Oemof. (2019) *Stratified thermal storage.* https://oemof-thermal.readthedocs.io/en/latest/stratified_thermal_storage.html.

Ommen, T., Jensen J., Meesenburg, W., Jørgensen, P.H., Pieper, H., Markussen, W.B., & Elmegaard, B. (2019) Generalized COP Estimation of Heat Pump Processes for Operation off the Design Point of Equipment. Proceedings of the 25th IIR International Congress of Refrigeration. https://doi.org/10.18462/IIR.ICR.2019.0648.

Walden, J. V. M., Wellig, B., & Stathopoulos, P. (2023). Heat pump integration in non-continuous industrial processes by Dynamic Pinch Analysis Targeting. *Applied Energy*, *352*, Article 121933. https://doi.org/10.1016/j.apenergy.2023.121933

Waddicor, D. A., Fuentes, E., Azar, M., & Salom, J. (2016). Partial load efficiency degradation of a water-to-water heat pump under fixed set-point control. *Applied Thermal Engineering*, *106*, 275–285. https://doi.org/10.1016/j.applthermaleng.2016.05.193

Zühlsdorf, B., Poulsen, J.L., Dusek, S., Wilk, V., Krämer, J., Rieberer, R., Verdnik, M., Demeester, T., Vieren, E., Magni, C., Abedini, H., Leroy, C., Yang, L., Andersen, M.P., Elmegaard, B., Turunen-Saaresti, T., Uusitalo, A., De Carlan, F., Gachot, C., Schlosser, F., Klöppel, S., Khass, O.A., Schaffrath, R., Wittstadt, U., Henninger, S., Teles de Oliveira, H., Kaida, T., Ramirez, M., Lycklama a Nijeholt, J.-A., Schlemminger, C., Moen, O.M., Lee, G., & Arpagaus, C. (2023) Annex 58 High -Temperature Heat Pumps Task 1 – Technologies Task Report. https://heatpumpingtechnologies.org/annex58/