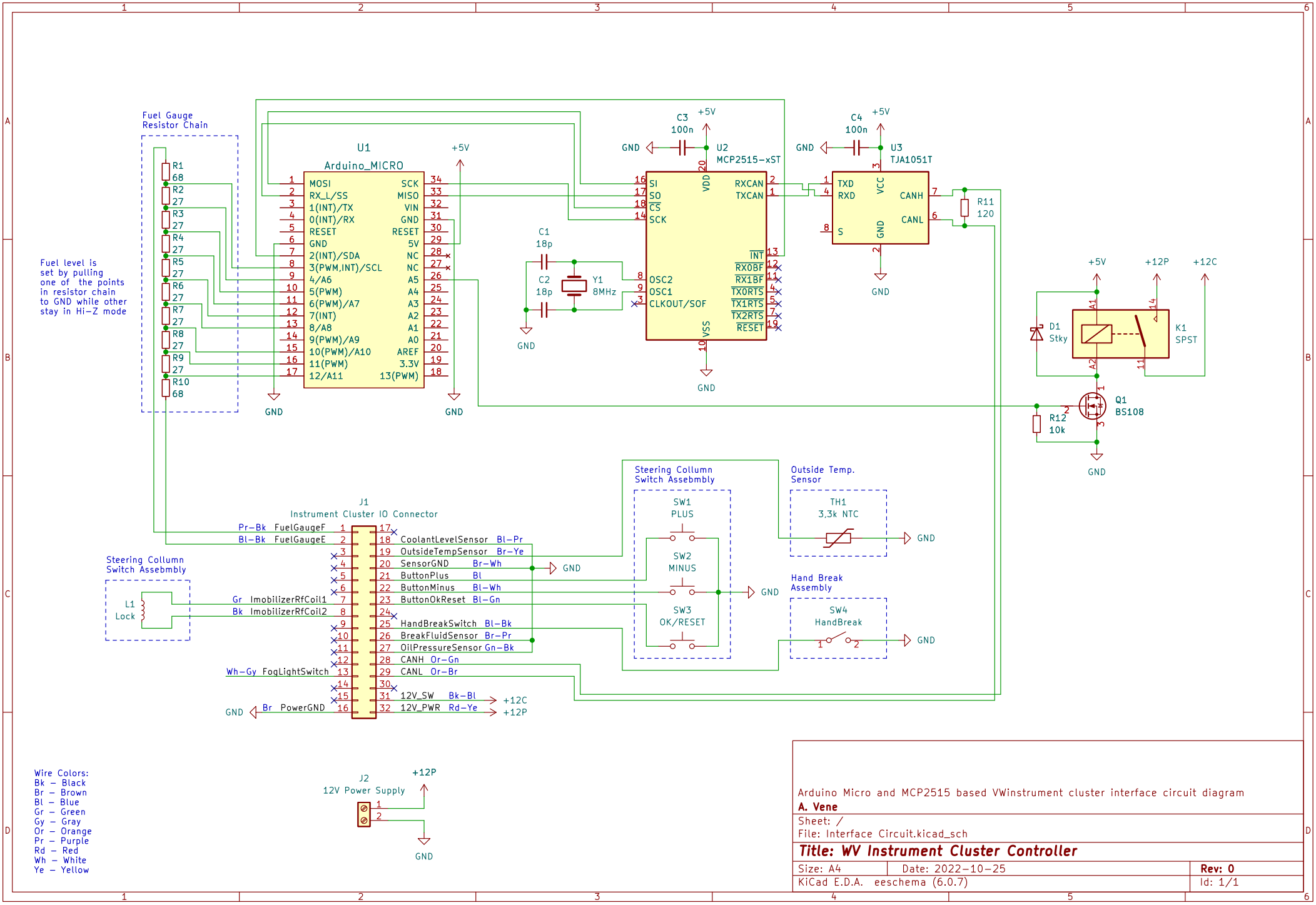

Arduino Micro and MCP2515 based VWinstrument cluster interface circuit diagram

A. Vene

Sheet: /

File: Interface Circuit.kicad_sch

Title: WV Instrument Cluster Controller

Size: A4	Date: 2022-10-25	**Rev: 0**
KiCad E.D.A. eeschema (6.0.7)		Id: 1/1