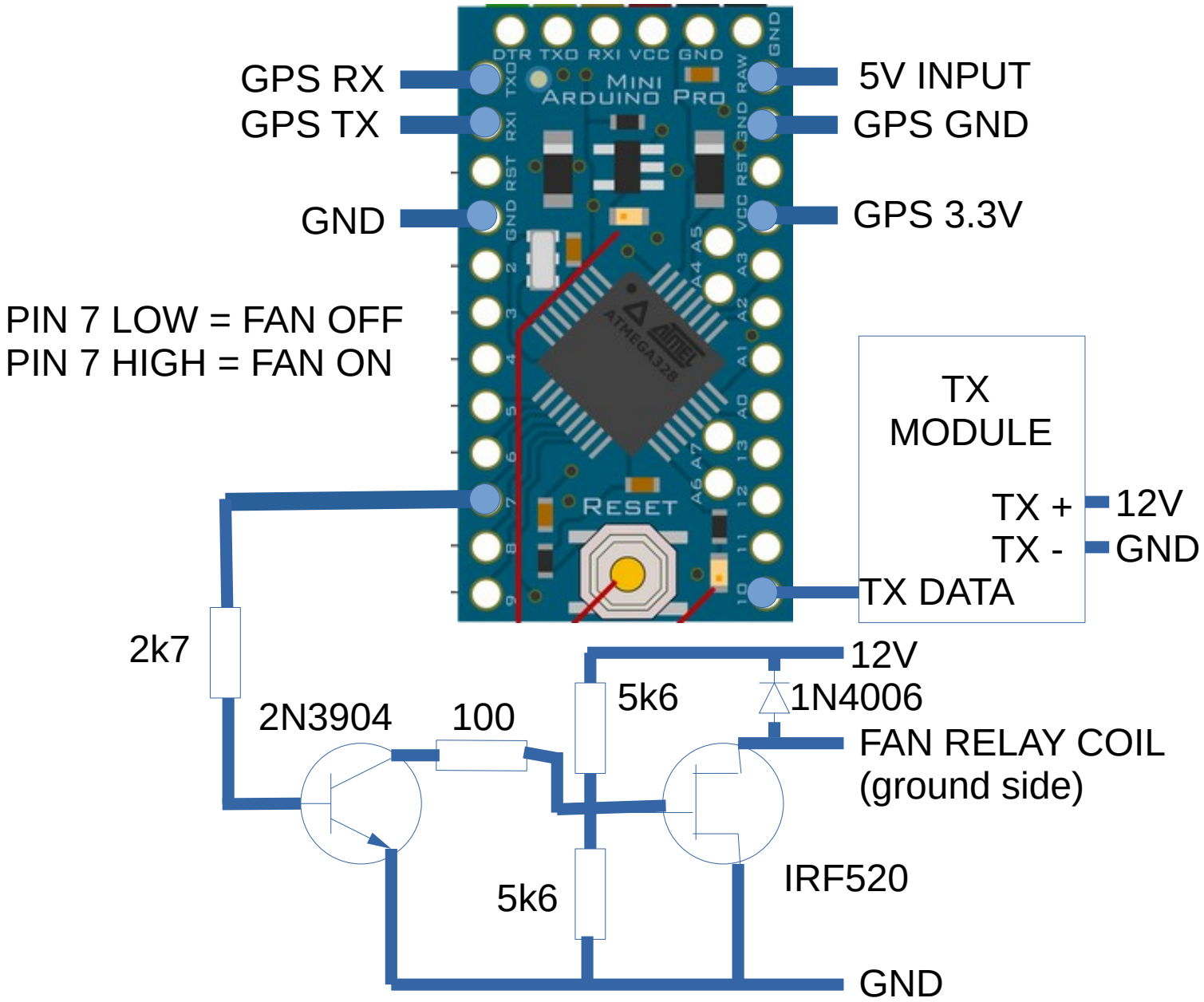
GPS RX
GPS TX
GND
PIN 7 LOW = FAN OFF
PIN 7 HIGH = FAN ON
5V INPUT
GPS GND
GPS 3.3V
TX MODULE
TX +
TX -
TX DATA
12V
GND
2k7
2N3904
100
5k6
5k6
12V
1N4006
FAN RELAY COIL
(ground side)
IRF520
GND
MINI ARDUINO PRO
RESET