TABLE OF CONTENTS

Sr. No.	Topic	Page no.
1.	List of figures	3
2.	List of Table	4
3.	Company Overview	5
4.	Title	8
5.	Literature Survey	9
6.	OBJECTIVES	11
7.	BBMB,BALLABGARH	12
8.	Equipements used in PLCC	15
9.	Workdone	21
10.	Result	24
11.	Conclusion	25
12.	Future Scope	25
13.	References	26

List of FIGURES

Sr. No.	Title of the Figure	Page no.
1.	BBMB Logo	5
2.	Bhakra Dam	6
3.	Bhakra Canal Irrigation	7
4.	Primary Coupling Capacitor	15
5.	Wave Trap	16
6.	PLCC Transmitter and Receiver	17
7.	Protection and Earthing of Coupling Equipment	18
8.	Lightning Arrestor	19
9.	LMU	20
10.	Battery Backup of PLCC System	22
11.	Regulator of Battery Backup System	22
12.	Battery Testing	23

List of TABLES

Sr. No.	Title of TABLE	Page no.
1.	Overview of Bhakra Project	6
2.	Power Houses with Generation Capacity in MW	7
3.	Specifications of Transmission Lines	7

1.ABOUT THE COMPANY

1.1.Formation

As per the Indus Water Treaty, 1960 signed between India and Pakistan, the waters of three eastern rivers namely the Sutlej, the Beas and the Ravi were allotted to India for exclusive A Master Plan was drawn to harness the potential of

these rivers for providing assured irrigation, power generation and flood control. Bhakra and Beas Projects form major part of the plan and were established as a joint venture of the erstwhile states of Punjab and Rajasthan. The administration, maintenance and operation of Bhakra Nangal Project were handed over to Bhakra Beas Management Board w.e.f. 1st October 1967.

Since then, the Bhakra Beas Management Board is dedicated to the service of nation and is engaged in regulation of the supply of Water & Power from Bhakra Nangal and Beas Projects to the states of Punjab, Haryana, Rajasthan, Himachal Pradesh, Delhi and Chandigarh.

BHAKRA BEAS
MANAGEMENT BOARD

Fig 1 BBMB Logo

1.2.Overview

- BBMB has an installed capacity of 2918.73 MW - the third largest installed hydro power capacity in India.
- BBMB also transmits power in the Northern Grid through a widespread network of 3751.96 Ckt. km of 400, 220, 132 and 66 kV transmission lines.
- BBMB maintains some of the largest water reservoirs in the country such as Bhakra and Pong Dam reservoirs and also operates 98km long water conductor system including channels & tunnels.
- Bhakra - Nangal & Beas Projects have been harbinger of green & white revolutions,

rapid industrialization & urbanization in Northern Region, besides protecting the downstream area from ferocious floods.

Fig 2 Bhakra Dam

Overview	UNITS
Number Of Power Houses	**28**
Number Of Beneficiary States	**6**
Generating Capacity	**5**
	2918.73 MW

TABLE 1 Overview of Bhakra Project

Large base of Hydro Power in India:

BBMB has been promoting the cause of Renovation, modernization and Up-rating of old Hydro Power Houses in the country. This task has already been undertaken for all the BBMB Power Houses

Project	**Generation Capacity (MW)**
Bhakra Left Bank Power House	630

Bhakra Right Bank Power House	785
Ganguwal Power House	76.39
Kotla Power House	77.34
Dehar Power House	990
Pong Power House	396

TABLE 2 Power Houses with Generation Capacity in MW

Network Of Transmission Lines From 400 KV To 66 KV:

Sr. No.	Voltage Level	Number of Sub Stations	Line Length (CKT. KMS)
1.	400 KV	3	573.95
2.	220 KV	17	2993.54
3.	132 KV	2	21.72
4.	66 KV	2	115.50
	Total	**24**	**3704.71**

TABLE 3 Specifications of Transmission Lines

Fig 3 Bhakra Canal Irrigation

2.TITLE OF THE PROJECT

The project in which I am involved is "POWER SECTOR AT 220KV SUB-STATION, BBMB, BALLABGARH" which contains many tasks:

1. Study of Sub-Station Equipment's to get a proper insight into the Communication System.
2. Regular record of specification panels installed at the sub-station to identify the hazards and accessing the risk in order to improve the competency and efficiency of sub-station units from time-to-time.
3. Maintenance and Testing of Lead Acid Batteries to increase the life span and efficiency of Power Backup Systems.

.

3.Literature Survey

3.1.Introduction

Power Line Carrier Communication (PLCC) is one of the oldest and most reliable methods of communication used in high-voltage power systems. It enables the transmission of voice, data, and protection signals over existing power transmission lines by superimposing high-frequency signals (typically between 30 kHz and 500 kHz) on the 50 Hz power wave.

This approach eliminates the need for separate communication cables, making it cost-effective, efficient, and ideal for long-distance communication between substations. In the context of the Bhakra Beas Management Board (BBMB) power network, PLCC plays a vital role in ensuring coordinated operation, fault protection, and system stability across multiple substations.

3.2.Historical Background

The concept of PLCC emerged in the mid-20th century when power utilities required a reliable way to communicate between distant generating stations and substations. Early systems used **Double Side Band Amplitude Modulation (DSB-AM)**, which occupied large bandwidths and suffered from signal losses.

By the 1970s, **Single Side Band Suppressed Carrier (SSB-SC)** techniques were introduced, significantly improving the channel efficiency and reducing interference. Over time, PLCC systems were integrated into substation control and protection networks, working alongside supervisory systems such as **SCADA (Supervisory Control and Data Acquisition)**.

In India, the development of PLCC systems paralleled the expansion of hydro and thermal power infrastructure under organizations such as BBMB, NTPC, and Power Grid Corporation. PLCC became the backbone for communication in remote areas where optical fiber and microwave systems were not yet feasible.

3.3.Existing Research and Standards

Several international and national standards govern the design and operation of PLCC systems. The **International Telecommunication Union – Telecommunication Standardization Sector (ITU-T)** and **International Electrotechnical Commission (IEC)** have established frequency limits and modulation practices for power line communication.
Specifically, **IEC 495:1993** and **IS 9482:1996** define performance requirements for PLCC equipment, ensuring compatibility, safety, and efficiency.

Research conducted over the past decades has examined key aspects such as:

- Signal attenuation across long transmission lines (typically 40–100 dB/km at 400–500 kHz).
- Interference due to nonlinear loads and electromagnetic noise from induction motors or switching circuits.
- Comparison between **phase-to-ground** and **phase-to-phase coupling**, with the latter providing better reliability and reduced radiation loss.
- The role of **wave traps**, **coupling capacitors**, and **line matching units (LMU)** in isolating carrier frequencies from power frequency components.

These studies emphasize that proper tuning, impedance matching, and periodic testing of PLCC components are essential for maintaining communication quality.

3.4.Comparative Communication Technologies

With the advancement of modern communication technologies, alternatives to PLCC have also been developed.

- **Optical Fiber (OPGW – Optical Ground Wire)**: Offers high bandwidth and immunity to interference but requires new infrastructure and higher costs.
- **Microwave Radio Links**: Provide reliable point-to-point communication but are susceptible to environmental factors.
- **Satellite and IoT-based Communication**: Emerging technologies that offer real-time monitoring but still rely on stable power and network connectivity.

Despite these alternatives, PLCC continues to be used widely because it leverages **existing transmission lines**, requires minimal additional infrastructure, and provides a **fail-safe backup** during communication link failures.

3.5.Research Gaps and Motivation

Existing literature reveals several challenges in the implementation and maintenance of PLCC systems:

- **Signal degradation** due to load variations and electromagnetic interference.
- **Aging of coupling equipment**, leading to impedance mismatch and data loss.
- **Limited bandwidth**, which restricts the simultaneous transmission of multiple data and voice channels.
- **Dependence on DC battery backup systems**, which require periodic maintenance and testing to ensure uninterrupted operation.

These challenges highlight the need for regular inspection, modernization, and technical evaluation of PLCC systems—an objective that directly aligns with the internship training undertaken at **BBMB Ballabgarh Substation**.

4.OBJECTIVES

General objectives are discussed below:

1. To understand the basis of communication in the power sector industry.
2. To establish carrier communication between two serving sub-stations.
3. To work on hands-on equipment by going to the site personally.
4. To get a wider range of knowledge of the power line carrier communication system.
5. To generate daily reports and analyze.
6. To be in command of whatever task has been assigned and completed in the given time span.

Occupational Health and Safety objectives are as follows:

1. To prevent accidents and incidents (ill-health and injuries) at the workplace by periodically improving control measures.
2. To maintain clean, orderly working and storage conditions to prevent the ill-health, unsafe practices and unsafe conditions.
3. To ensure that effective control measures are implemented to meet any emergency situations in all operations and support services.

5.Overview of Bhakra Beas Management Board (BBMB),BALLABGARH

The 220kV Substation of **Bhakra Beas Management Board (BBMB)**, located at **Ballabgarh**, lies approximately **5 km from Ballabgarh city** and **10 km from Faridabad**, on the right-hand side of **National Highway NH-2**. The total area spans **34.7 acres**, subdivided as follows:

- **13.0 acres** for the substation infrastructure,
- **12.4 acres** for BBMB and HVPNL stores and offices,
- **9.3 acres** for the staff residential colony.

This substation serves as a key node in the transmission network, connected to:

- **Badarpur Thermal Power Station (BTPS)** via two 220kV double circuit lines,
- **Samaypur** via three 220kV circuits,
- **Charkhi Dadri** through a single 220kV circuit.

Additionally, **66kV double circuit lines** supply electric power to the **Indian Railways**.

At present, the substation operates with:

- **Three 100MVA, 220/66kV transformers**,
- Several 220kV transmission lines for interconnection with regional grid points,
- A **66kV ring main** and **radial feeders** supplying Faridabad and surrounding areas,
- Two dedicated **66kV feeders** serving the Railways.

Substation Layout and Equipment – Detailed Explanation

5.1. Power Transformers

Power transformers are the heart of any substation. At BBMB Ballabgarh, they step down high voltage from **220kV to 66kV** for regional distribution. These are **three-phase, oil-cooled transformers**, each rated at **100 MVA**. They ensure voltage regulation, load management, and reliable power supply to HVPNL's 66kV feeders.

5.2. Circuit Breakers

Circuit breakers are automatic switches that interrupt fault current to isolate damaged sections of the grid. They are used in both **incoming and outgoing feeders**. **SF6 gas-insulated breakers** are commonly used at 220kV for fast arc quenching, ensuring safety and system stability under fault conditions.

5.3. Current Transformers (CTs)

CTs scale down high line current (e.g., thousands of amperes) to standard 1A or 5A levels.

These are vital for **metering and protection** circuits. By providing isolated current signals, they protect sensitive relay equipment and help operators monitor power flow and overloads accurately.

5.4. Potential Transformers (PTs)

PTs, also known as voltage transformers, convert high transmission voltages into **standard measurable values** (like 110V). Installed on each bay, they provide essential voltage inputs to **meters, relays, and control logic**, allowing real-time monitoring and over/under-voltage protection of the system.

5.5. Isolators (Disconnect Switches)

Isolators are manually operated switches that disconnect a circuit when **no current is flowing**. Used for **maintenance and inspection**, they ensure a visible break in the circuit. They're always operated after circuit breakers are opened to guarantee safety during equipment servicing.

5.6. Wave Traps (Line Traps)

Wave traps, mounted on 220kV lines, block high-frequency PLCC signals (30–500 kHz) from entering power equipment like transformers. They **guide signals** to the PLCC panels and allow simultaneous power and data transmission. This supports remote relay operation and voice communication over power lines.

5.7. Lightning Arresters

These devices protect substation equipment from **voltage surges** caused by lightning or switching operations. Installed near transformers and incoming lines, they provide a low-resistance path to ground, discharging dangerous surges and ensuring insulation safety and prolonged equipment life.

5.8. Busbars

Busbars are **rigid aluminum or copper conductors** that distribute power between various parts of the substation. They carry heavy current and are typically arranged in **single, double, or main and transfer** bus configurations for flexibility, reliability, and easy switching during faults or maintenance.

5.9. Control and Relay Panels

Located inside the control room, these panels consist of **protection relays, control switches, indicators, and alarms**. They continuously monitor electrical parameters and trip breakers when faults are detected. This system ensures **real-time control, fault isolation, and automation** for secure substation operation.

5.10. PLCC Equipment

PLCC (Power Line Carrier Communication) systems enable **telecommunication, telemetry, and remote protection** between substations. Using coupling capacitors, hybrid couplers, and wave traps, these systems send high-frequency signals over power lines, ensuring command

and control even in remote transmission networks.

5.11. Battery Bank and Chargers

Essential for emergency operations, the battery bank provides **uninterrupted DC power** (typically 110V or 220V DC) to control panels, protection relays, and trip coils. A dedicated charger ensures batteries remain in healthy condition and automatically switch to backup power during outages.

5.12. Auxiliary Transformers

These smaller transformers supply **domestic loads** such as **lighting, fans, air conditioning**, and control panel power (e.g., 230V or 415V). They derive power from the main bus and ensure proper working conditions for operational staff and sensitive electronic equipment.

5.13. Cable Trenches and Raceways

Underground **cable trenches and raceways** provide secure routing for **power, control, and communication cables** throughout the substation. They protect cables from mechanical damage, weather, and electromagnetic interference, while also keeping the layout clean, organized, and accessible for maintenance.

5.14. Grounding and Earthing System

A well-designed grounding system ensures **every metallic part is at earth potential**. This helps safely dissipate fault currents, lightning surges, and leakage currents into the ground, protecting both human lives and equipment from electrical hazards and potential differences.

As part of my internship experience, I had the opportunity to work in the Power Line Carrier Communication (PLCC) section of the substation. I gained practical knowledge about the transmission of high-frequency signals over power lines for operational communication between substations. I also studied the role of line traps, coupling capacitors, hybrid units, and the integration of PLCC panels with the control system. This hands-on exposure enhanced my understanding of both communication protocols and the coordination required between protection and control systems in high-voltage substations.

6.Equipements used in PLCC

6.1. Coupling capacitor

Coupling capacitor connects the carrier equipment to the transmission line. The coupling capacitor's capacitance is of such a value that it offers low impedance to carrier frequency (1/6C) but high impedance to power frequency (50 Hz).For example 2000pF capacitor offers 1. SM2 to 50toenter the carrier equipment. To decrease the impedance further and make the circuit purely resistive so that there is nonreactive power in the circuit, low impedance is connected in series with coupling capacitor to form resonance at carrier frequency.

Fig. 4 (Primary Coupling Capacitor)

6.2 .Line Trap unit/Wave Trap

Do not allow the transmitted HF carrier to enter inside the sub-station. Without line trap HF carrier get bypassed to some other line on the same bus bar and may leak to ground.The carrier energy on the transmission line must be directed toward the remote line terminal and not toward the station bus and it must be isolated from bus impedance variations. This task is performed by the line trap. The line trap is usually a form of a parallel resonant circuit which is tuned to the carrier energy frequency. A parallel resonant circuit has high impedance at its tuned frequency, and it then causes most of the carrier energy to flow toward the remote line terminal. The coil of the line trap provides a low impedance path for the flow of the power frequency energy. Since the power flow is rather large at times, the coil used in a line trap must be large in terms of physical size. Hence a line trap unit /Wave trap is inserted between bus bar and connection of coupling capacitor to the line. It is a parallel tuned circuit comprising of

inductance (L) and Capacitance (C).It has low impedance (lessthan0.1) for power frequency (50 Hz) and high impedance to carrier frequency .This unit prevents the high frequency carrier signal from entering the neighbouring line.Wave Trap.

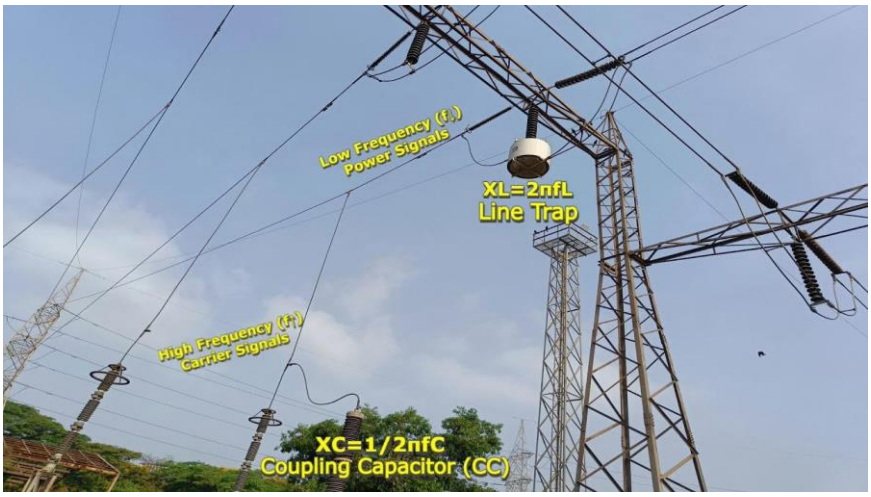

Fig. 5.(Wave Trap)

6.3. TUNING DEVICE

These are used with high voltage, high stability mica capacitors with no losses. For lower voltage class of tuning units (with impulse test voltage rating up to 40 KV) Polystyrene capacitors are used by some manufactures. For higher voltage class of tuning units with impulse test voltage rating up to 150 KV, capacitors with mineral oils impregnated paper dielectric are used which rare similar in construction to coupling capacitors all types are mounted in epoxy resin. Single frequency traps have a single and double frequency traps and double tuned parallel resonant circuits. All the elements belonging to the tuning circuits are usually mounted in a common housing,trap to a different frequency.

6.4.Transmitters and Receiver

The carrier Transmitters and Receivers are usually mounted in a rack or cabinet in the control room, and the line tuner is out in the switchyard. Thus there is a large distance between the equipment and the tuner, and the connection between the two is made using a coaxial cable Fiber Optical (FO) Cable.The coaxial cable provides shielding so that noise cannot get into the cable and cause interference. The coaxial cable is connected to the line tuner which must be mounted at the base of the coupling capacitor. If there is more than one transmitter involved per terminal the signal must go through isolation circuits, typically hybrids, before connection to the line tuner.

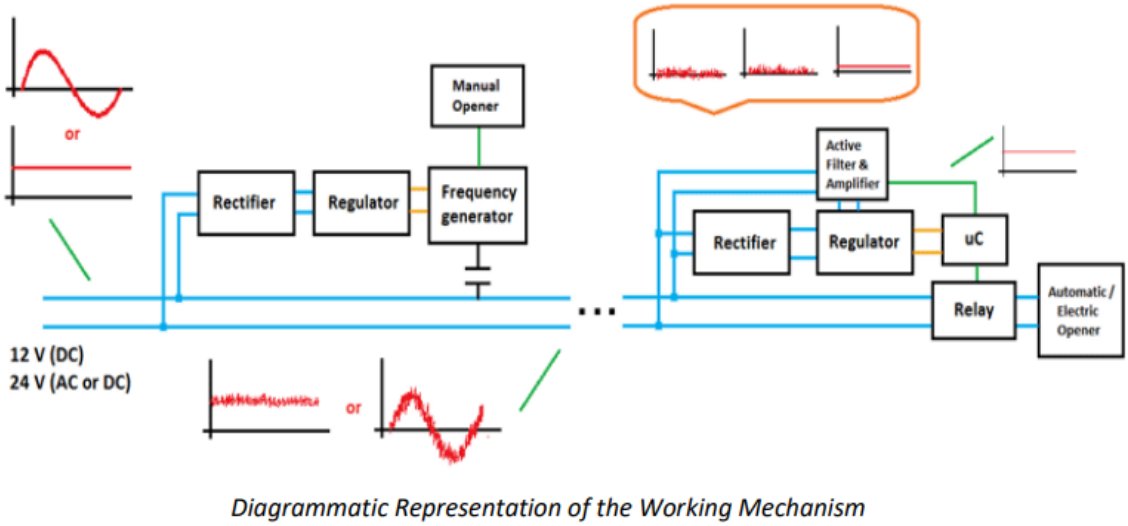

Fig. 6. (PLCC Transmitter and Receiver)

6.5. Hybrids and Filters

The purpose of the hybrid circuits is to enable the connection of two or more transmitters together on one coaxial cable without causing intermediation distortion due to the signal from one transmitter affecting the output stages of the other transmitter. Hybrids may also be required band-pass networks may also be used, in some applications, to isolate carrier equipment from course, cause large losses in the carrier path and must be used appropriately. High /low -pass and between transmitters and receivers, depending on the application.

6.6. Line Tuner

The purpose of the line tuner in conjunction with the coupling capacitor is to provide low impedance path for the carrier energy to the transmission line and a high impedance path to the impedance path to the power line by forming a series resonant circuit tuned to the carrier power frequency energy. The line tuner /coupling capacitor combination provides a low frequency. On the other hand, the capacitance of the coupling capacitor is high impedance to the power frequency energy. Even though the coupling capacitor has high impedance at power frequencies, there must be a path to ground in order that the capacitor may do its job. This function is provided by the drain coil, which is in the base of the coupling capacitor. The drain coil is designed to be low impedance at the power frequency and because of its inductance it will have high tuner, coupling capacitor, and the drain coil provide the necessary tools for coupling the carrier energy to the transmission line and blocking the power frequency energy. One last function of the line tuner is to provide matching of impedance between carrier coaxial cable, usually 50

to 75 ohms, and the power line which will have an impedance of 150 to 500ohms.

6.7. Protection and Earthing of Coupling Equipment

Over voltage can be caused due to lightning, switching and sudden loss of load etc. They produce stress on coupling equipment and line trap units. Non linier resistor in series with protective gap is connected across the line trap unit and inductor of coupling unit. The gap is adjusted to spark at a set value of over voltage. Coupling unit and PLCC equipment are earthed through a separate and dedicated system, so that ground potential rise of station ear thing system does not affect the reference voltage level /Power supply common ground of the PLCC

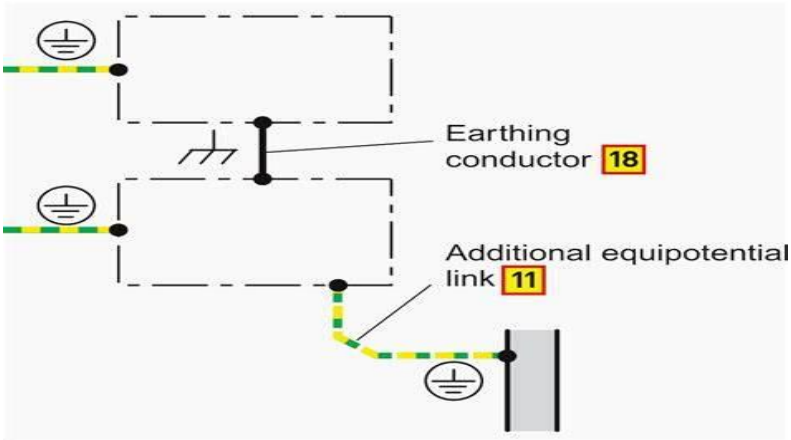

Fig.7.(Protection and Earthing of Coupling Equipment)

6.8. Lightning Arrester

A lightning arrester (in Europe: surge arrester) is a device used on electrical power systems and telecommunications systems to protect the insulation and conductors of the system from the damaging effect of lightning. The typical lightning arrester has a high-voltage terminal and a the power line to the arrester, the current from the surge is diverted through the arrestor, in most ground terminal. When a lightning surge (or switching surge, which is very similar) travels along cases to earth.

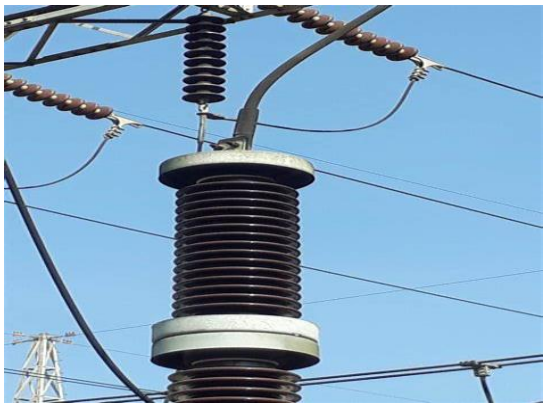

Fig.8. (Lightning Arrestor)

6.9. Drainage Coil:

When supply is given, all equipments start working. Wave trap block high frequency signals like 200khz and pass low frequency signal like 50hz and coupling capacitor passes the high frequency signals of 200 kHz and blocks low frequency signal of 50 Hz. During all this process if any leakage current flows due to any distortion, then this drainage coil arrests all leakage current and ground it so that it does not cause any harm to the network.

6.10. Line Matching Unit

The out-put of PLCC is connected to the line matching unit before to the power lines to achieve the proper impedance matching in between PLCC Equipments and power line.LMU is a composite unit consisting of Drain Coil, Isolation transformer with Lightning Arrester on its both the sides, a Tuning Device and an earth switch. Tuning Device+ is the combination of R-L-C circuits which act as filter circuit. LMU is also known as Coupling Device. Together with coupling capacitor, LMU serves the purpose of connecting effectively the Audio/Radio frequency signals to either transmission line or PLC terminal and protection of the PLCC unit from the over voltages caused due to transients on power system.

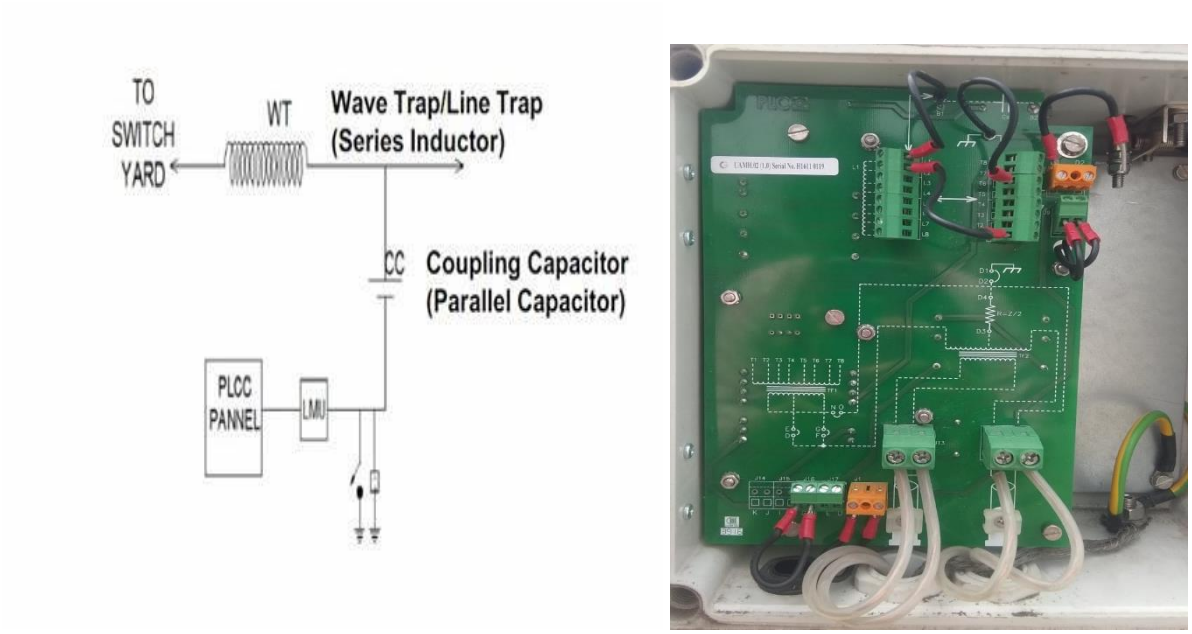
TO
SWITCH
YARD
WT
Wave Trap/Line Trap
(Series Inductor)
CC
Coupling Capacitor
(Parallel Capacitor)
PLCC
PANNEL
LMU

Fig.9. (LMU)

7.Work Done

During my industrial training at the **220 kV Substation, Bhakra Beas Management Board (BBMB), Ballabgarh**, I primarily studied the **overall structure and operation of the substation** and the **battery backup and float charging system** used for uninterrupted DC supply to control and communication equipment.

7.1. Study of BBMB Substation Structure

I began my internship by studying the **complete layout of the BBMB substation**. Under the guidance of the substation engineers, I observed the arrangement and functioning of key components such as:

- **Power Transformers (220/66 kV)**
- **Circuit Breakers and Isolators**
- **Current and Potential Transformers (CTs and PTs)**
- **Lightning Arresters, Busbars, and Wave Traps**
- **PLCC (Power Line Carrier Communication) Units**

This helped me understand how electrical energy is transmitted, stepped down, and distributed safely through high-voltage networks.
I also learned how protective relays and isolators operate during maintenance and how PLCC enables reliable communication between substations.

7.2. Study of the Battery Backup and Float Charging System

A major part of my training focused on the **Battery Backup System**, which provides continuous DC power to relays, control panels, and PLCC equipment even during AC power failures.
I studied how the system maintains stable operation using **Float Charging**, which keeps the battery at full charge without overcharging.

I learned that:

- The **float charger** supplies a low, regulated voltage (typically 2.25–2.30 V per cell for lead-acid batteries).
- It is **microprocessor-controlled**, automatically adjusting voltage and current as per battery requirements.
- The **battery**, **charger**, and **regulator** work together to ensure constant voltage and safe operation.

I also understood the difference between **linear** and **switching regulators**, and how they control the charging voltage and current efficiently.

Fig. 10 (Battery Backup of PLCC System)

7.3. Process of Float Charging

Through manuals and engineer explanations, I studied the three stages of float charging:

- **Initiation Stage:** The charger provides a constant voltage to bring the battery to full charge.
- **Maintenance Stage:** The system keeps voltage steady to prevent overcharging or sulfation.
- **Completion Stage:** The charger automatically switches off or reduces voltage when the battery is fully charged.

This process ensures longer battery life and stable performance during continuous operation.

7.4. Maintenance and Testing Procedures

I observed how engineers perform **routine maintenance and testing** of the backup system. I learned how they identify faults such as:

- MCCB tripping due to defective diodes or SCRs
- High ripple output from open capacitors
- High float voltage due to faulty control circuits

I studied a maintenance chart that described common **faults, causes, and remedies**, helping me understand how preventive maintenance ensures system reliability.

Fig. 11 (Regulator of Battery Backup System)

7.5. Battery Testing Methods

I studied the different **battery testing techniques** used to assess performance, capacity, and safety:

- **Voltage Testing:** Open-circuit and load voltage checks for state of charge.
- **Capacity Testing:** Charge–discharge cycles to measure actual vs rated capacity.
- **Performance Testing:** Evaluating rate capability and thermal stability.
- **Safety Testing:** Short-circuit and overcharge protection tests.
- **Life Cycle Testing:** Measuring cycle life and aging performance.

These tests ensure that the backup batteries can handle critical loads during faults or outages.

Fig. 12 (Battery testing)

11.References

1. https://www.bing.com/ck/a?!&&p=00129856bd59eae4JmltdHM9MTcxNjY4MTYwMCZpZ3VpZD0wMTIwNGIxZS00ZDc3LTZjOTEtMDNkNi01OTQ5NGM4NTZkMzEmaW5zaWQ9NTIzNQ&ptn=3&ver=2&hsh=3&fclid=01204b1e-4d77-6c91-03d6-59494c856d31&psq=plcc+references&u=a1aHR0cHM6Ly9lbGVjdHJpY2FsLWVuZ2luZWVyaW5nLXBvcnRhbC5jb20vcG93ZXItbGluZS1jYXJyaWVyLWNvbW11bmljYXRpb24tcGxjYw&ntb=1
2. A Brief Introduction to PLCC Panels - Electrical Concepts (electricalbaba.com)
3. (PDF) Power line communication: An overview (researchgate.net)
4. https://www.bing.com/ck/a?!&&p=cd5877dc98a563e6JmltdHM9MTcxNjY4MTYwMCZpZ3VpZD0wMTIwNGIxZS00ZDc3LTZjOTEtMDNkNi01OTQ5NGM4NTZkMzEmaW5zaWQ9NTI3MA&ptn=3&ver=2&hsh=3&fclid=01204b1e-4d77-6c91-03d6-59494c856d31&psq=plcc+references&u=a1aHR0cHM6Ly93d3cuZWxlY3RyaWNhbDR1LmNvbS9wb3dlci1saW5lLWNhcnJpZXItY29tbXVuaWNhdGlvbi8&ntb=1
5. https://www.bing.com/ck/a?!&&p=7435dab6569a810eJmltdHM9MTcxNjY4MTYwMCZpZ3VpZD0wMTIwNGIxZS00ZDc3LTZjOTEtMDNkNi01OTQ5NGM4NTZkMzEmaW5zaWQ9NTM1MQ&ptn=3&ver=2&hsh=3&fclid=01204b1e-4d77-6c91-03d6-59494c856d31&psq=plcc+references&u=a1aHR0cHM6Ly93d3cuZWxwcm9jdXMuY29tL3doYXQtaXMtcG93ZXItbGluZS1jYXJyaWVyLWNvbW11bmljYXRpb24td29ya2luZy1pdHMtYXBwbGljYXRpb25zLw&ntb=1
6. https://www.bing.com/ck/a?!&&p=5452a26871dacb6aJmltdHM9MTcxNjY4MTYwMCZpZ3VpZD0wMTIwNGIxZS00ZDc3LTZjOTEtMDNkNi01OTQ5NGM4NTZkMzEmaW5zaWQ9NTQwNQ&ptn=3&ver=2&hsh=3&fclid=01204b1e-4d77-6c91-03d6-59494c856d31&psq=plcc+references&u=a1aHR0cHM6Ly93d3cubmV4dHBjYi5jb2

0vYmxvZy9wbGNjLXBhY2thZ2U&ntb=1

7. https://www.bing.com/ck/a?!&&p=42df4771e2b0fa09JmltdHM9MTcxNjY4MTYwMCZpZ3VpZD0wMTIwNGIxZS00ZDc3LTZjOTEtMDNkNi01OTQ5NGM4NTZkMzEmaW5zaWQ9NTIwNQ&ptn=3&ver=2&hsh=3&fclid=01204b1e-4d77-6c91-03d6-59494c856d31&psq=puncom+9500+chanel+modem&u=a1aHR0cDovL3d3dy5wdW5jb20uY29tL2Rvd25sb2Fkcy9QTENDLnBkZg&ntb=1
8. Puncom Manual for PL9500
9. Puncom Manual for Testing and Maintenance of PLCC
10. Puncom Manual for Testing and Maintenance of Float Charger