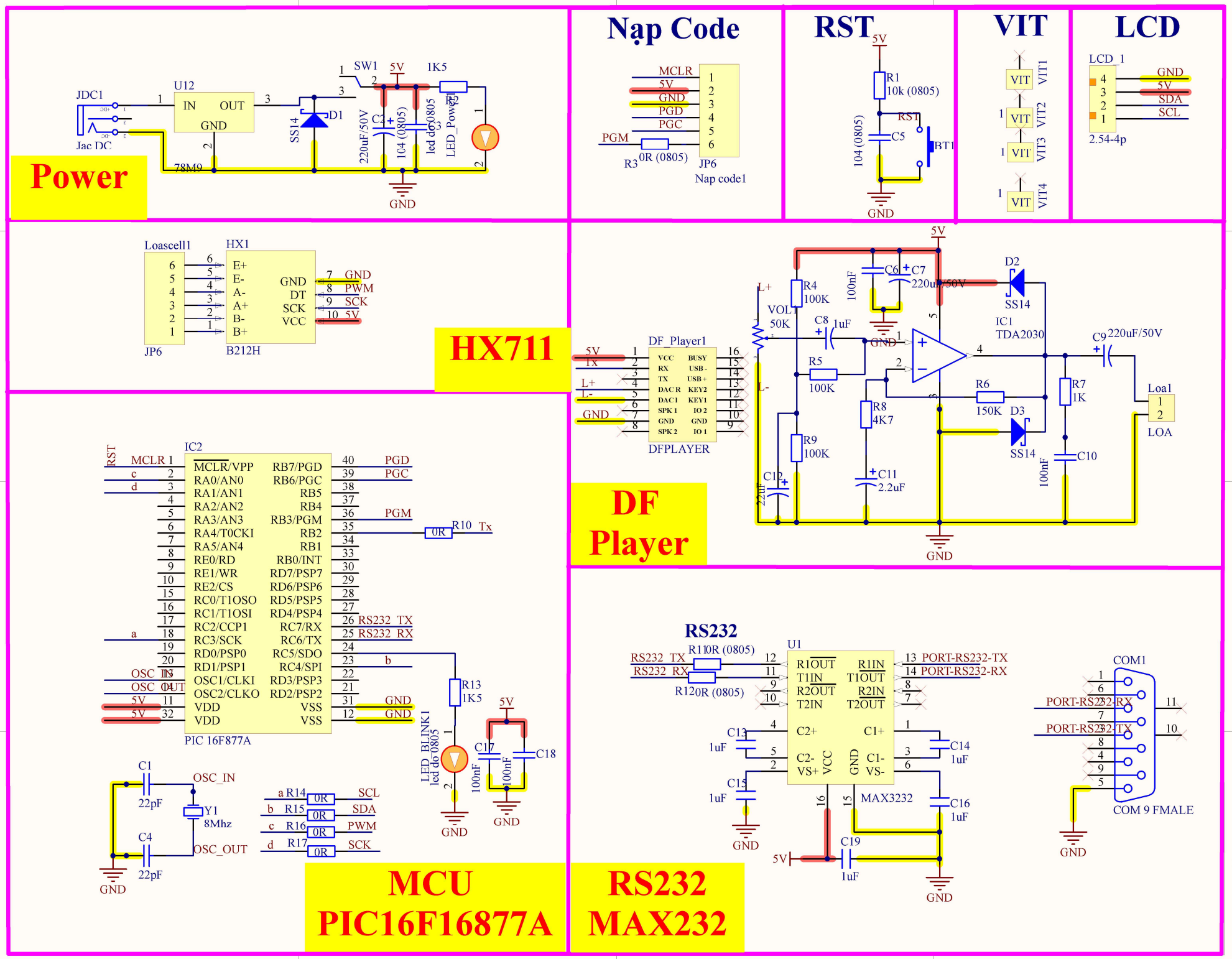
Power
JDC1
Jac DC
U12
IN
OUT
GND
78M9
SW1
5V
1K5
R2
D1
SS14
C2
220uF/50V
104 (0805)
led do0805
LED_Power1
GND
Nạp Code
MCLR
5V
GND
PGD
PGC
PGM
R3
0R (0805)
JP6
Nap code1
RST
R1
10k (0805)
RST
BT1
104 (0805)
C5
GND
VIT
VIT1
VIT2
VIT3
VIT4
LCD
LCD_1
GND
5V
SDA
SCL
2.54-4p
Loascell1
JP6
HX1
E+
E-
A-
A+
B-
B+
GND
DT
SCK
VCC
B212H
GND
PWM
SCK
5V
HX711
DF_Player1
VCC
RX
TX
DAC R
DAC 1
SPK 1
GND
SPK 2
BUSY
USB -
USB +
KEY2
KEY1
IO 2
GND
IO 1
DFPLAYER
L+
L-
GND
R4
100K
VOL
50K
C8
1uF
R5
100K
R8
4K7
R9
100K
C11
2.2uF
C12
22uF
C6
100nF
C7
220uF/50V
IC1
TDA2030
D2
SS14
R6
150K
D3
SS14
C9
220uF/50V
R7
1K
C10
100nF
Loa1
LOA
DF Player
IC2
MCLR/VPP
RA0/AN0
RA1/AN1
RA2/AN2
RA3/AN3
RA4/T0CKI
RA5/AN4
RE0/RD
RE1/WR
RE2/CS
RC0/T1OSO
RC1/T1OSI
RC2/CCP1
RC3/SCK
RD0/PSP0
RD1/PSP1
OSC1/CLKI
OSC2/CLKO
VDD
VDD
RB7/PGD
RB6/PGC
RB5
RB4
RB3/PGM
RB2
RB1
RB0/INT
RD7/PSP7
RD6/PSP6
RD5/PSP5
RD4/PSP4
RC7/RX
RC6/TX
RC5/SDO
RC4/SPI
RD3/PSP3
RD2/PSP2
VSS
VSS
PGD
PGC
PGM
R10 Tx
0R
RS232 TX
RS232 RX
OSC_IN
OSC_OUT
5V
GND
PIC 16F877A
R13
1K5
LED_BLINK1
led do0805
C17
100nF
C18
100nF
C1
22pF
Y1
8Mhz
C4
22pF
SCL
SDA
PWM
SCK
MCU
PIC16F16877A
RS232
U1
R1OUT
T1IN
R2OUT
T2IN
C2+
C2-
VS+
VCC
GND
C1+
C1-
VS-
R1IN
T1OUT
R2IN
T2OUT
MAX3232
R11 0R (0805)
R12 0R (0805)
RS232 TX
RS232 RX
PORT-RS232-TX
PORT-RS232-RX
C13
1uF
C14
1uF
C15
1uF
C16
1uF
C19
1uF
COM1
COM 9 FMALE
RS232
MAX232