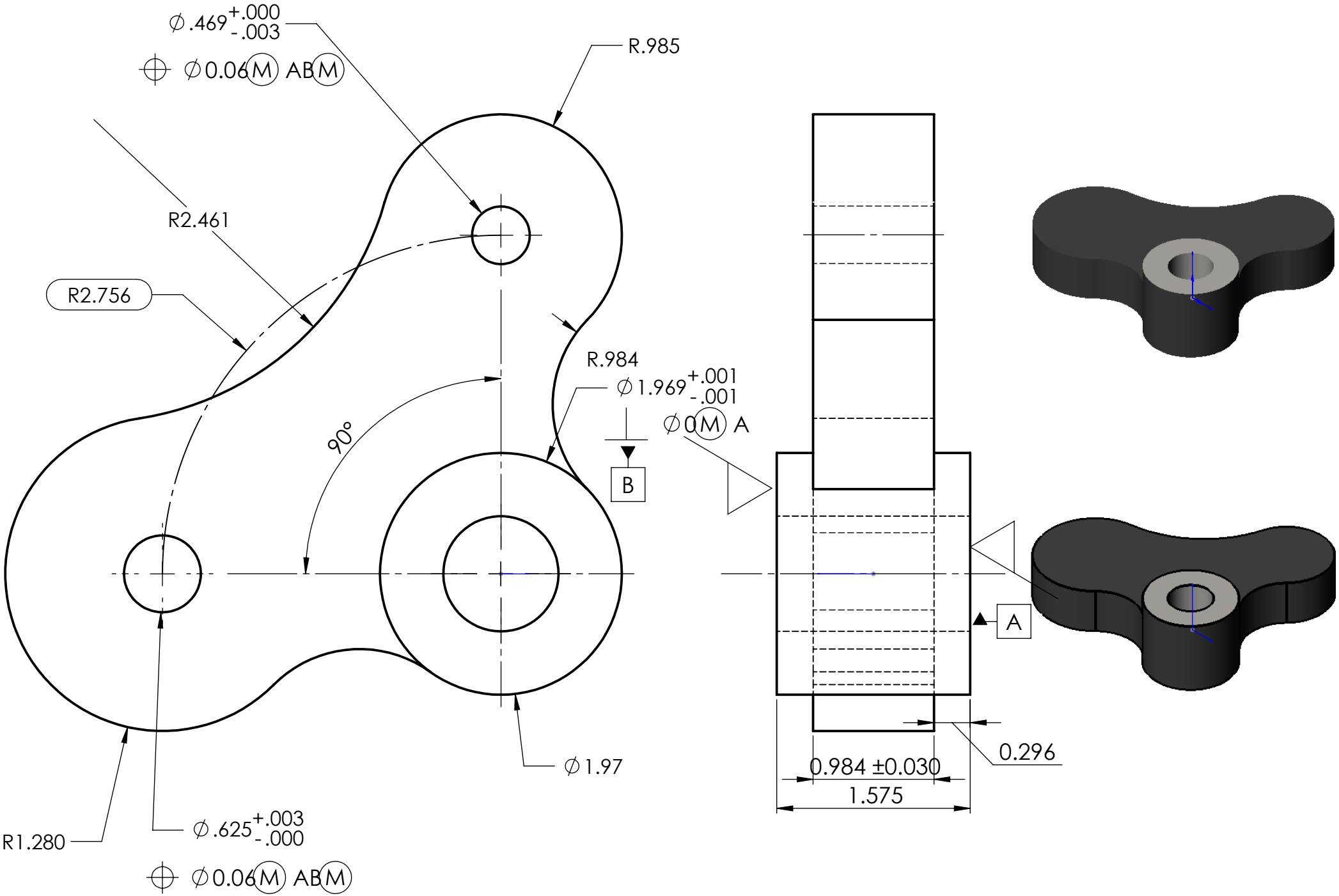
∅.469 +.000 -.003
∅0.06 M AB M
R.985
R2.461
R2.756
R.984
∅1.969 +.001 -.001
∅0 M A
90°
B
A
∅1.97
0.296
0.984 ±0.030
1.575
R1.280
∅.625 +.003 -.000
∅0.06 M AB M