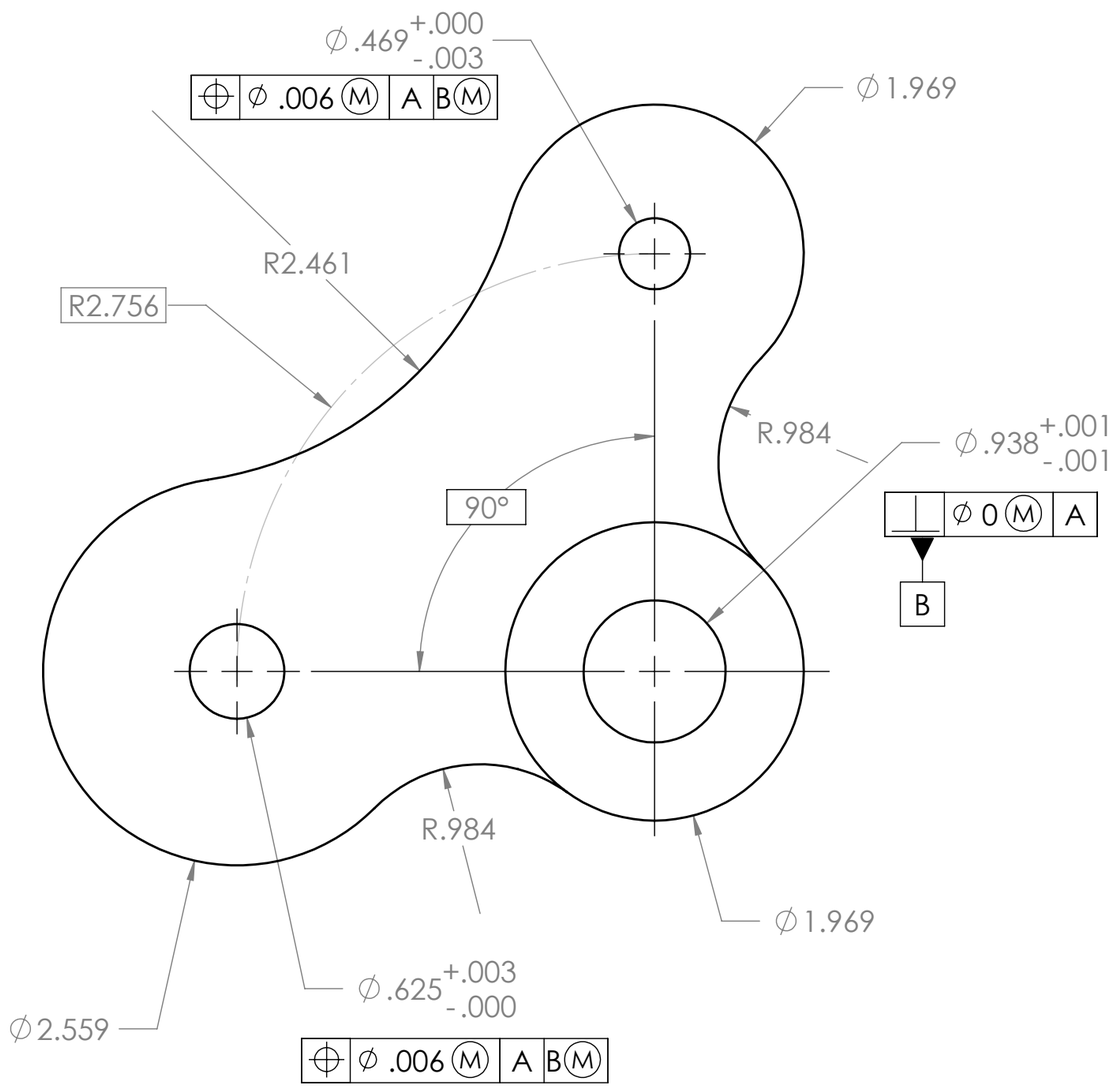

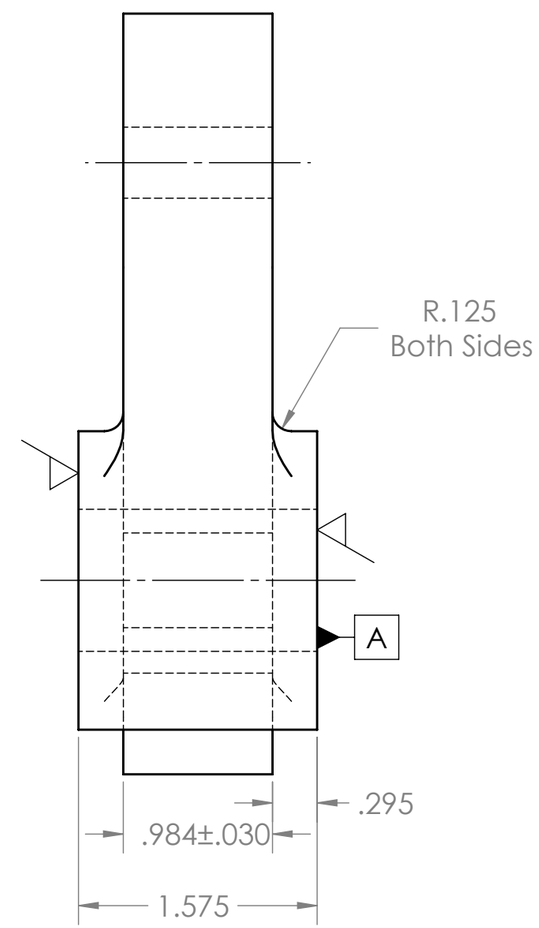

As Cast

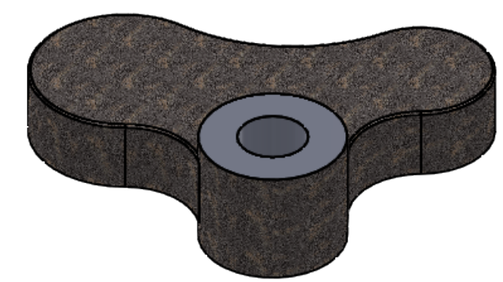

Ready to drill the 2 holes

		UNLESS OTHERWISE SPECIFIED:	DATE	May 24, 2017
		DIMENSIONS ARE IN **INCHES** TOLERANCES: FRACTIONAL ±.015 ONE PLACE DECIMAL ±.015" TWO PLACE DECIMAL ±.010" THREE PLACE DECIMAL ±.06"	DRAWN	Sevastian Irimie
			CHECKED	
			ENG APPR.	
			MFG APPR.	
		INTERPRET GEOMETRIC TOLERANCING PER:	Q.A.	
		MATERIAL Grey Cast Iron	COMMENTS: Rounds and Fillets R.03"	
NEXT ASSY	USED ON	FINISH		
APPLICATION		DO NOT SCALE DRAWING		

Mohawk College

TITLE:

Connector

SIZE	DWG. NO.	REV
B		

SCALE: 2:1 | WEIGHT: | SHEET 1 OF 1

SOLIDWORKS Educational Product. For Instructional Use Only.