ELROBOT

HTTPS://NORMACORE.DEV/

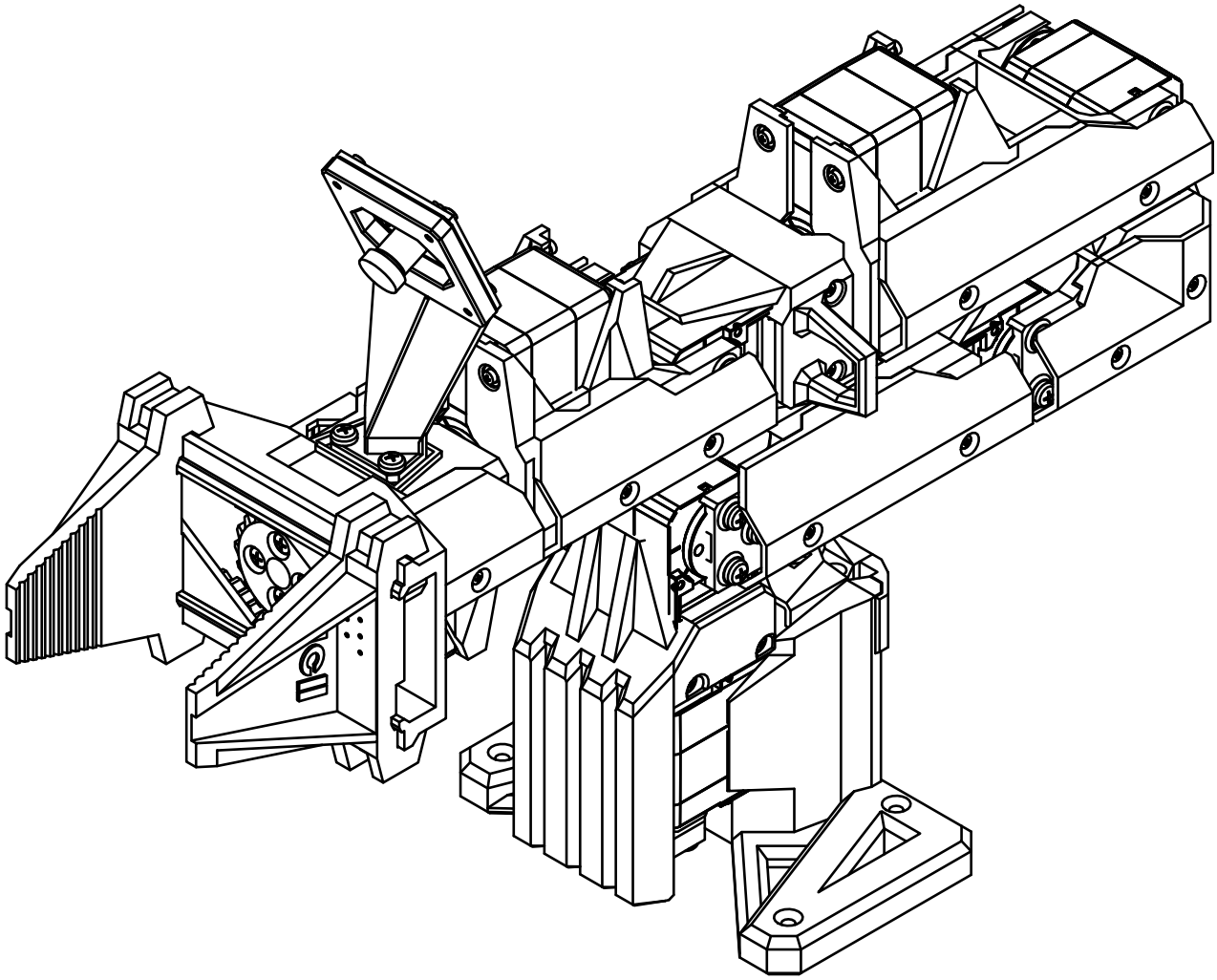

ElRobot

3D Printing Parts

Base 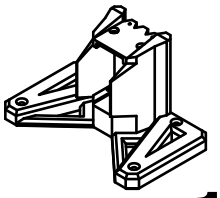 **A** **1x**	Joint 1 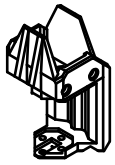 **B** **1x**	Joint 2 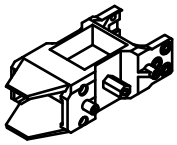 **C** **1x**	Joint 3 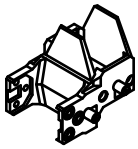 **D** **1x**
Joint 4 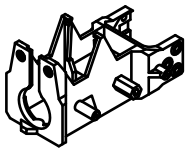 **E** **1x**	Joint 5 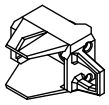 **F** **1x**	Joint 6 **G** **1x**	Gripper Base 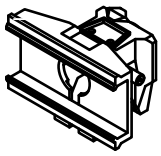 **H** **1x**
Gripper Gear **I** **1x**	Gripper Jaw **J** **2x**	Base Shield **K** **1x**	Joint 2 Shield Drive Side 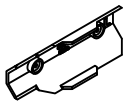 **L** **1x**
Joint 2 Shield Camera Side 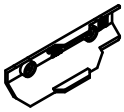 **M** **1x**	Joint 3 Shield Drive Side **N** **1x**	Joint 3 Shield Camera Side **O** **1x**	Joint 4 Shield Drive Side 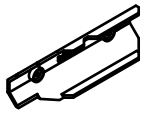 **P** **1x**
Joint 4 Shield Camera Side 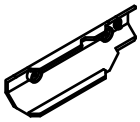 **Q** **1x**	Joint 6 Shield Drive Side 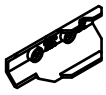 **R** **1x**	Joint 6 Shield Camera Side **S** **1x**	Gripper Base Shield Drive Side **T** **1x**
Gripper Base Shield Camera Side **U** **1x**	Wiring Bracket 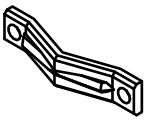 **V** **1x**	Camera Mount **W** **1x**	Enclosure 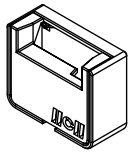 **X** **1x**

ElRobot

3D Printing Parts

Enclosure	
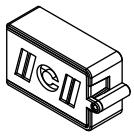 **X1** **1x**	

Servo parts

Servo ST3215	Idler Horn	Servo Horn	Servo wires
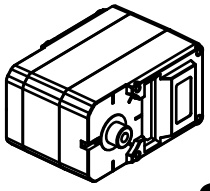 **Y** **8x**	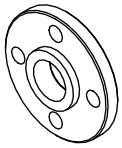 **Y1** **6x**	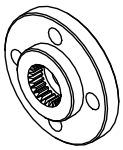 **Y2** **8x**	**Y3** **8x**
Screw M3x8	Self-tapping Screw M2x6		
Y4 **72x**	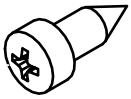 **Y5** **64x**		

Additional parts

UVC Camera innomaker U20CAM	Servo Driver Board	Servo Driver Board	Power Supply
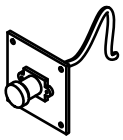 **Z** **1x**	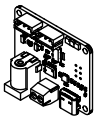 **Z1** **1x**	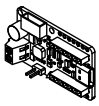 **Z2** **1x**	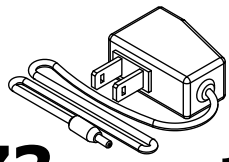 **Z3** **1x**

To assemble ElRobot you will need:
screwdrivers PH1 and PH2,
a marker or pencil,
a pair of clamps (you could print it),
a stationery knife
and a good mood.
Good luck and have fun!

ElRobot

Optional

Assemble the enclosure around the Servo Drive Board.

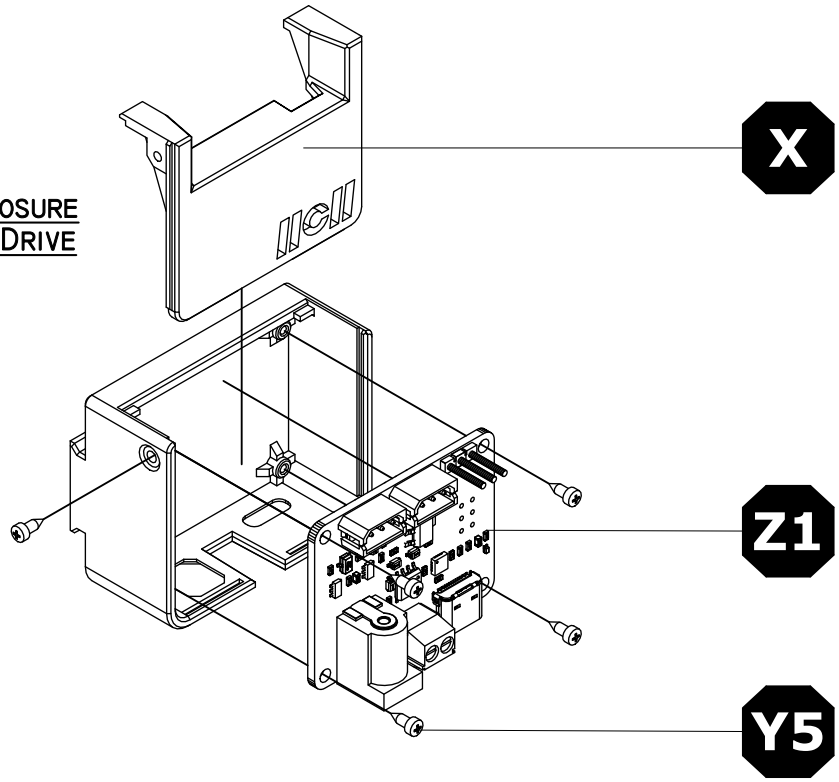

Enclosure	
X	1x
Servo Driver Board	
Z1	1x
Self-tapping Screw M2x6	
Y5	5x

Step 1

Choose enclosure depends on your Servo Drive Board

Assemble the enclosure around the Servo Drive Board.

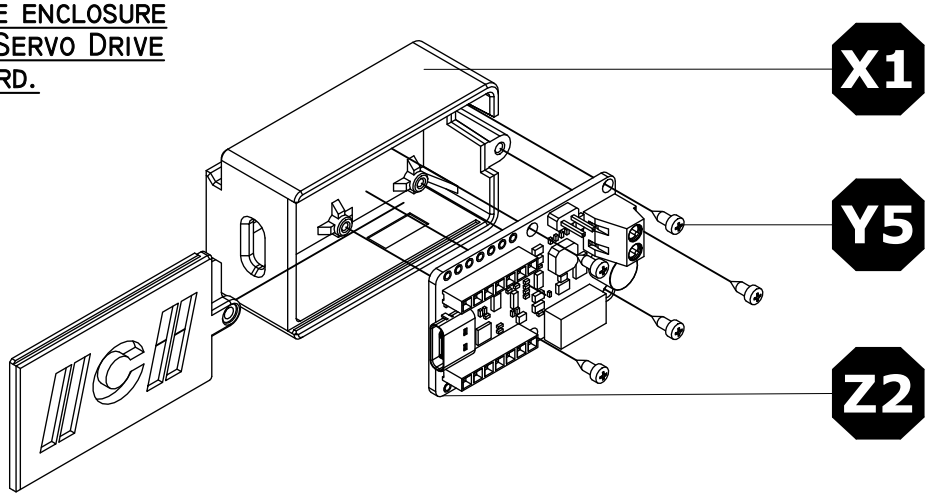

Enclosure	
X1	1x
Servo Driver Board	
Z2	1x
Self-tapping Screw M2x6	
Y5	5x

Optional

ELROBOT

STEP 2

! Use a marker to label each motor 1 to 8. !

SERVO ST3215

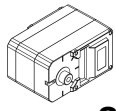

Y 8x

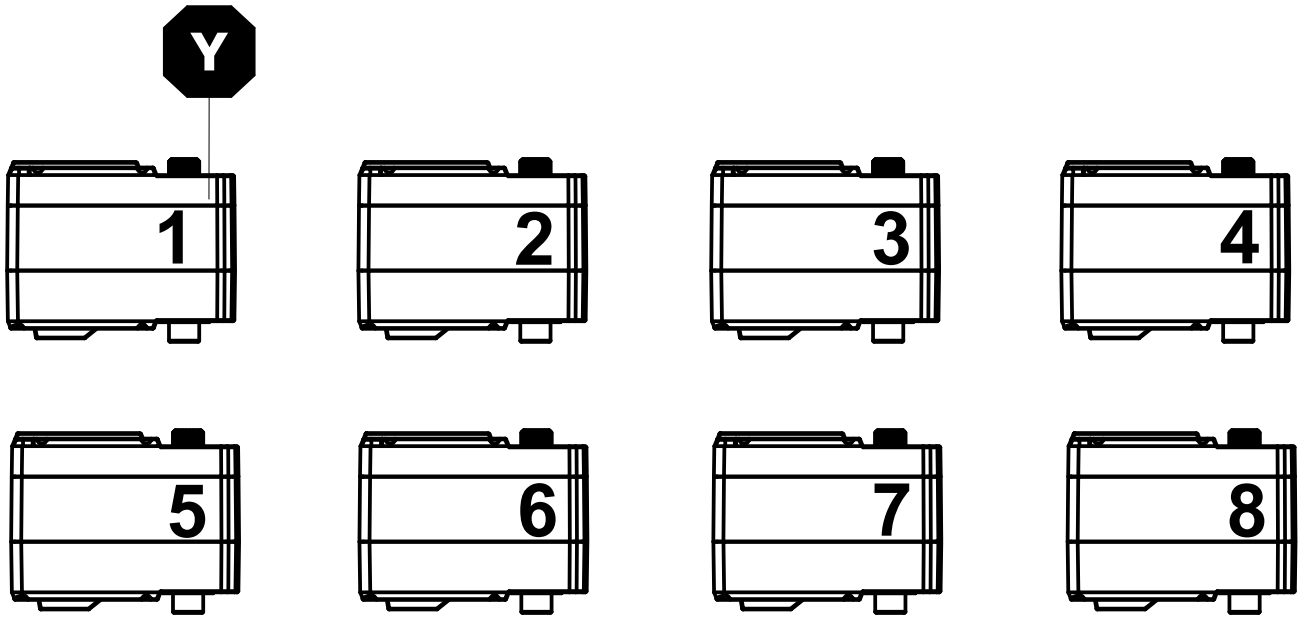

STEP 3

! Set motors ids using app!

SERVO ST3215

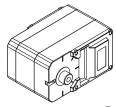

Y 8x

SERVO WIRES

Y3 8x

POWER SUPPLY

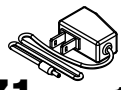

Z1 1x

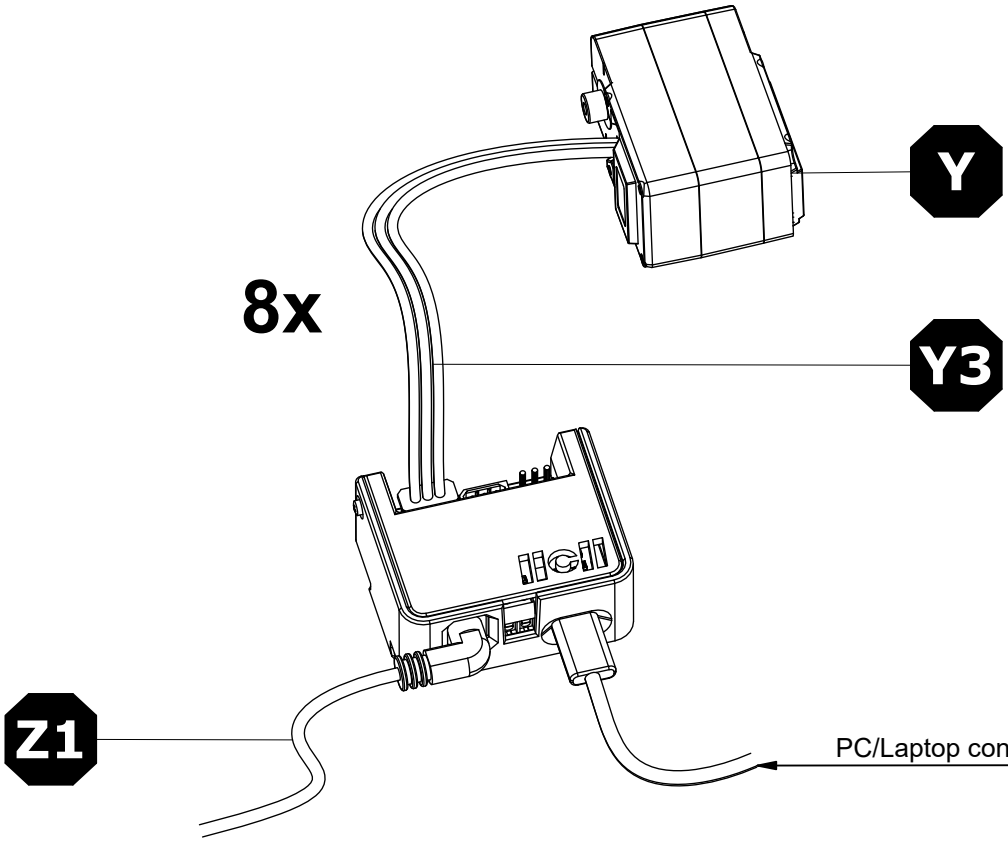

ELROBOT

STEP 4

Remove supports and clean parts after 3D printing.

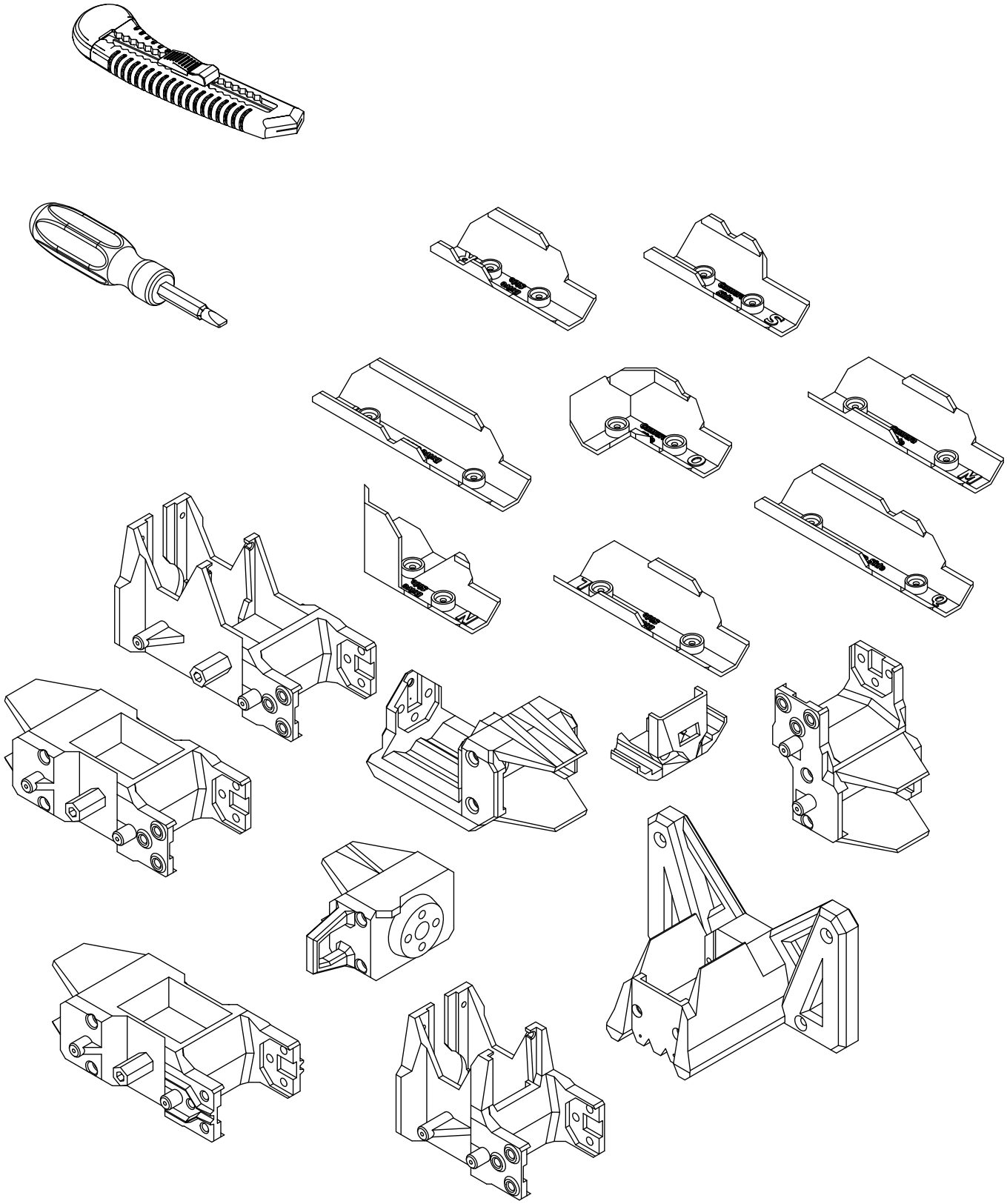

ELROBOT

STEP 5

! GENTLY PRESS THE SERVO INTO THE COMPONENT FOOTPRINT. ENSURE IT IS FULLY SEATED !

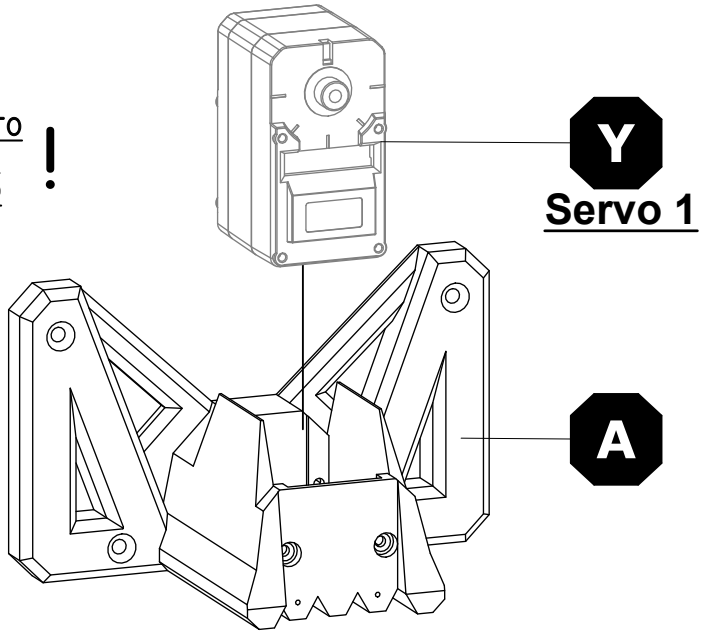

BASE

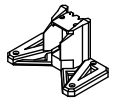

A 1x

SERVO ST3215

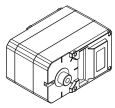

Y 1x

STEP 6

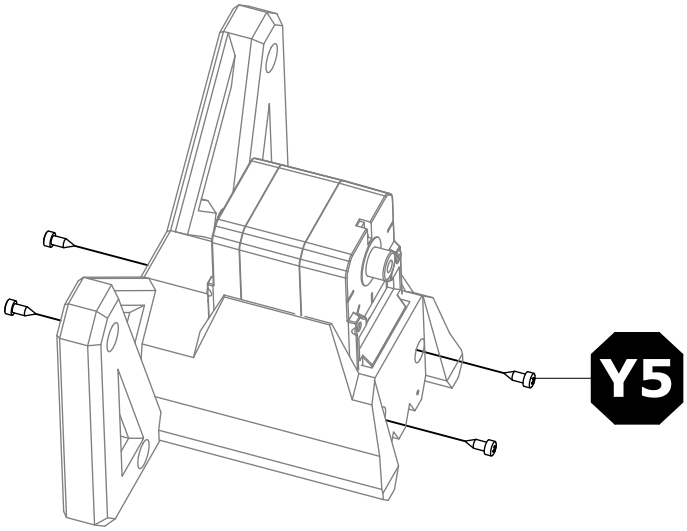

SELF-TAPPING SCREW M2x6

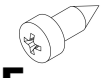

Y5 4x

STEP 7

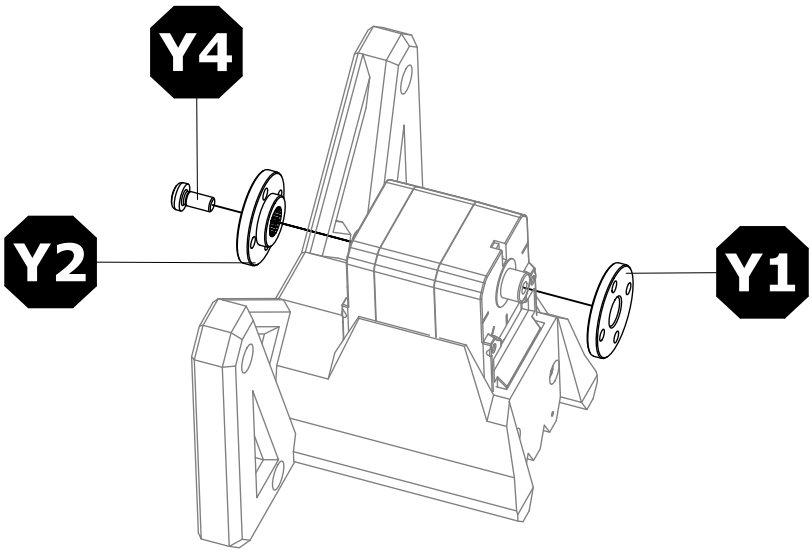

IDLER HORN

Y1 1x

SERVO HORN

Y2 1x

SCREW M3x8

Y4 1x

ELROBOT

STEP 8

! ROUTE THE SERVO WIRES AS SHOWN ON THE IMAGE. !

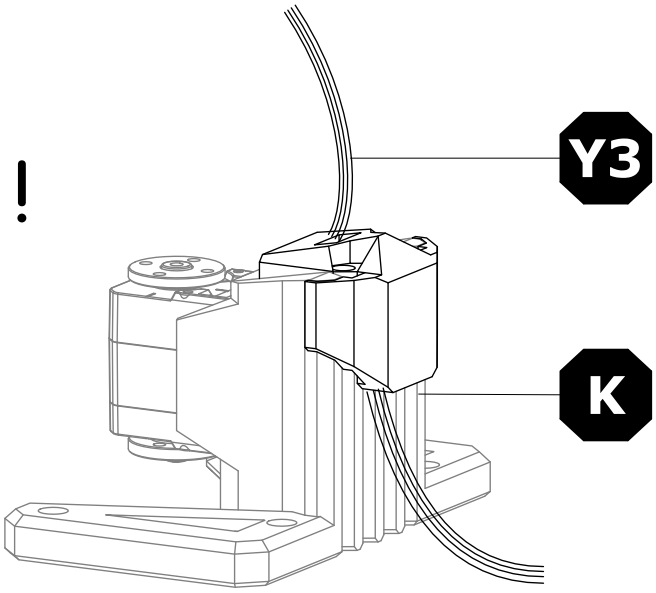

BASE Shield

K 1x

SERVO WIRES

Y3 2x

STEP 9

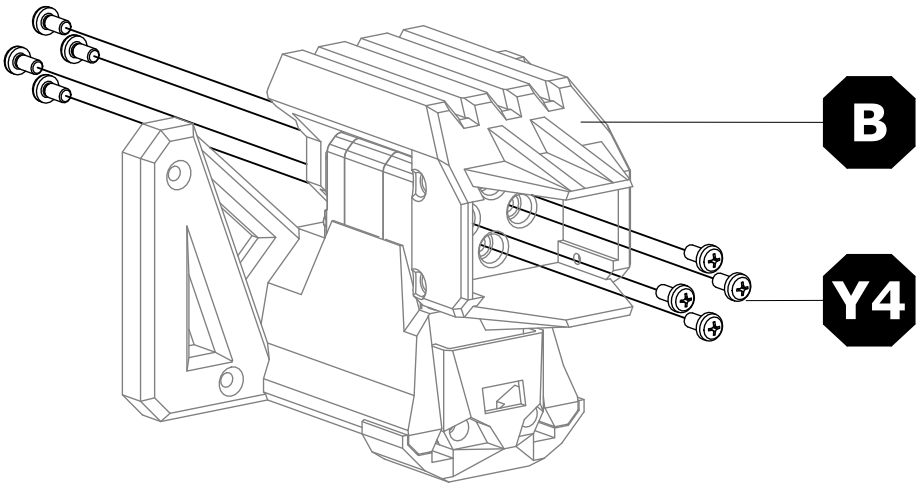

BASE

B 1x

SCREW M3x8

Y4 8x

STEP 10

! GENTLY PRESS THE SERVO INTO THE COMPONENT FOOTPRINT. ENSURE IT IS FULLY SEATED !

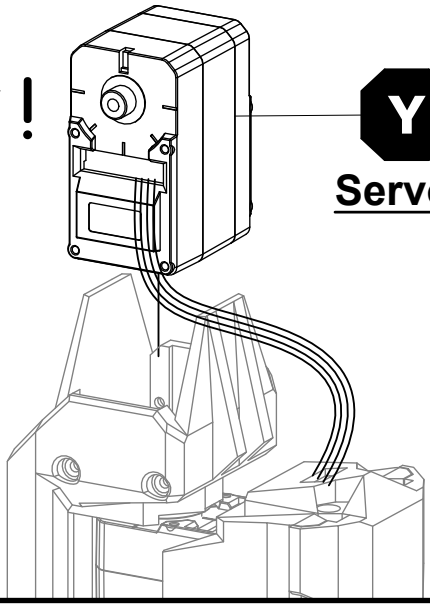

Servo 2

CONNECT THE SERVO 1 WIRE TO THE SERVO 2 AS SHOWN ON THE IMAGE.

SERVO ST3215

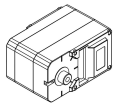

Y 1x

ELROBOT

STEP 11

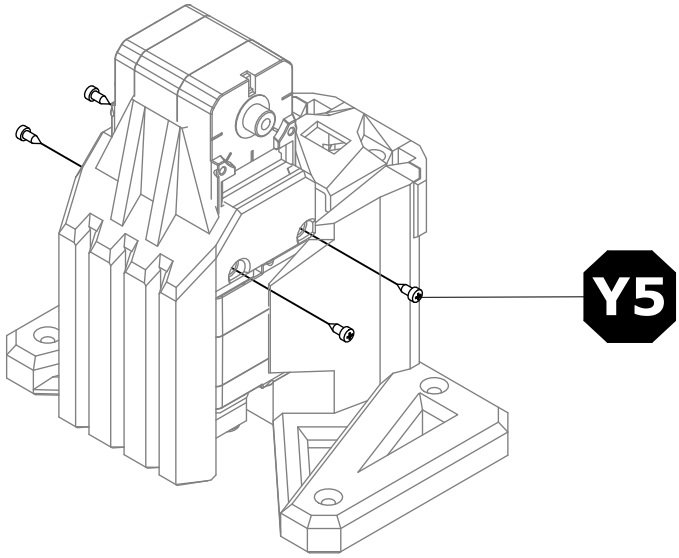

SELF-TAPPING SCREW M2x6

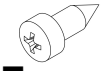

Y5 **4x**

STEP 12

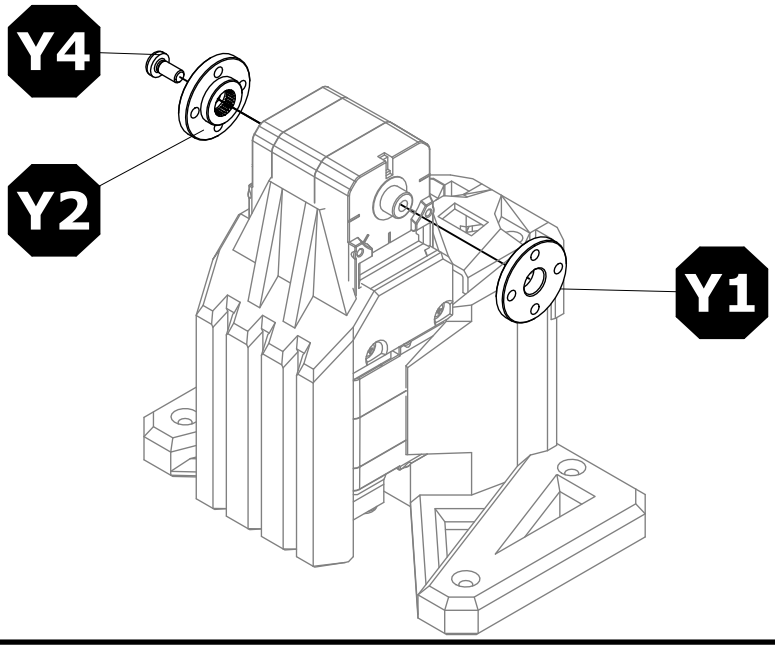

IDLER HORN

Y1 **1x**

SERVO HORN

Y2 **1x**

SCREW M3x8

Y4 **1x**

STEP 13

! GENTLY PRESS THE SERVO INTO THE COMPONENT FOOTPRINT. ENSURE IT IS FULLY SEATED !

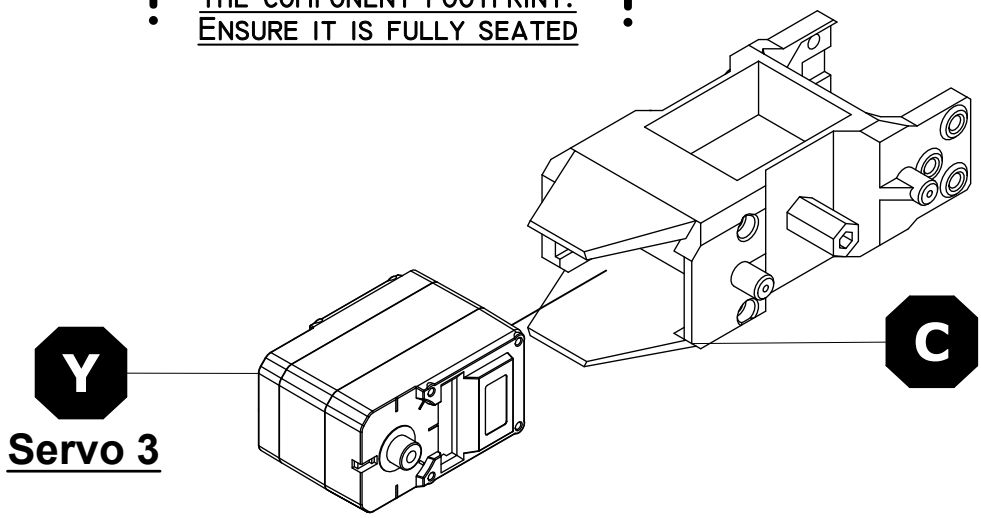

Servo 3

SERVO ST3215

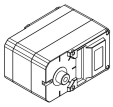

Y **1x**

BASE SHIELD

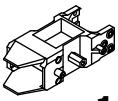

C **1x**

ElRobot

Step 14

Self-tapping Screw M2x6

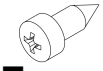

Y5 **4x**

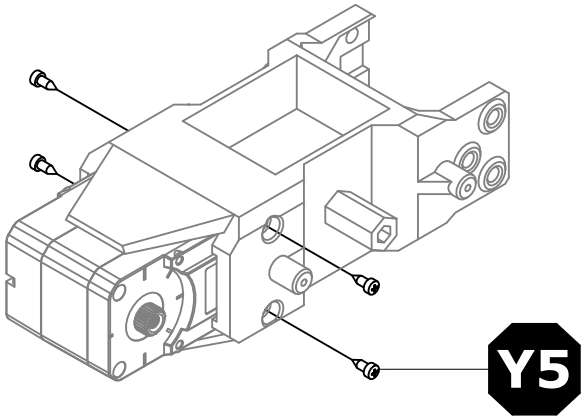

Step 15

Screw M3x8

Y4 **6x**

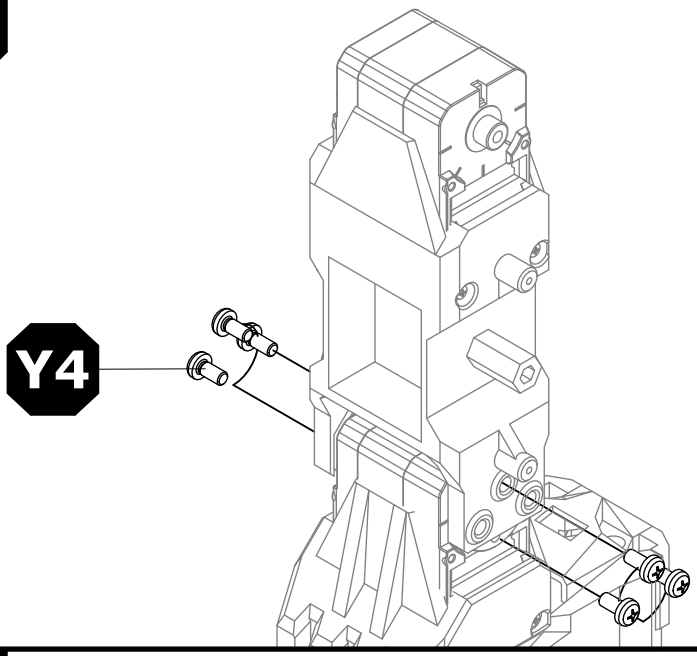

Step 16

Servo Wires

Y3 **1x**

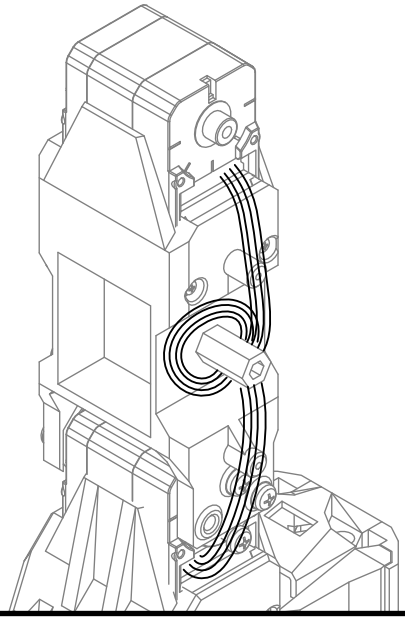

Connect the servo 3 wire to the servo 2 as shown on the image.

ELROBOT

STEP 17

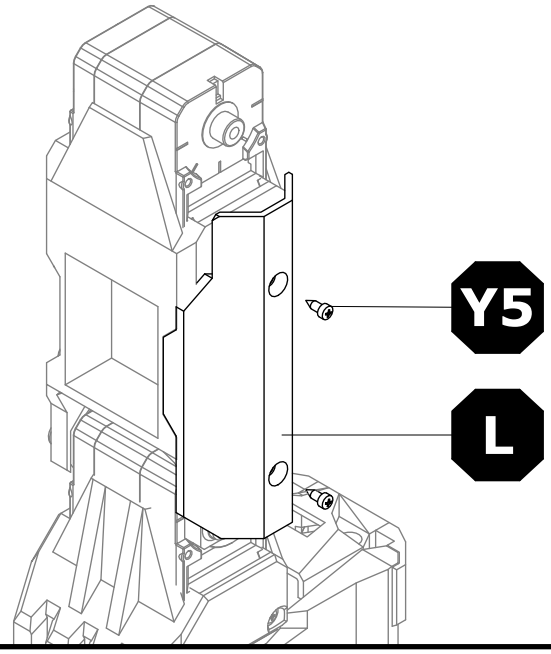

JOINT 2 SHIELD DRIVE SIDE	
L	1x
SELF-TAPPING SCREW M2x6	
Y5	2x

STEP 18

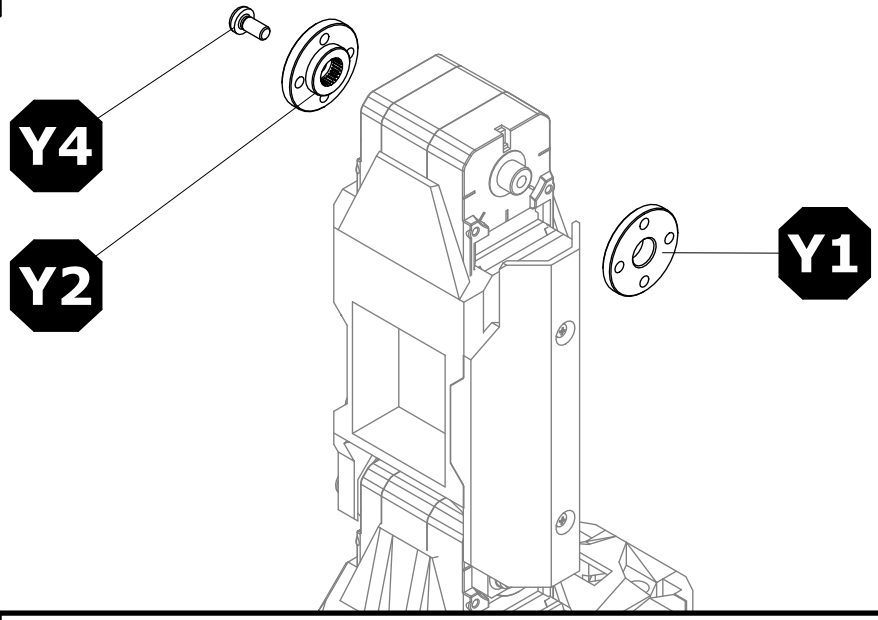

IDLER HORN	
Y1	1x
SERVO HORN	
Y2	1x
SCREW M3x8	
Y4	1x

STEP 19

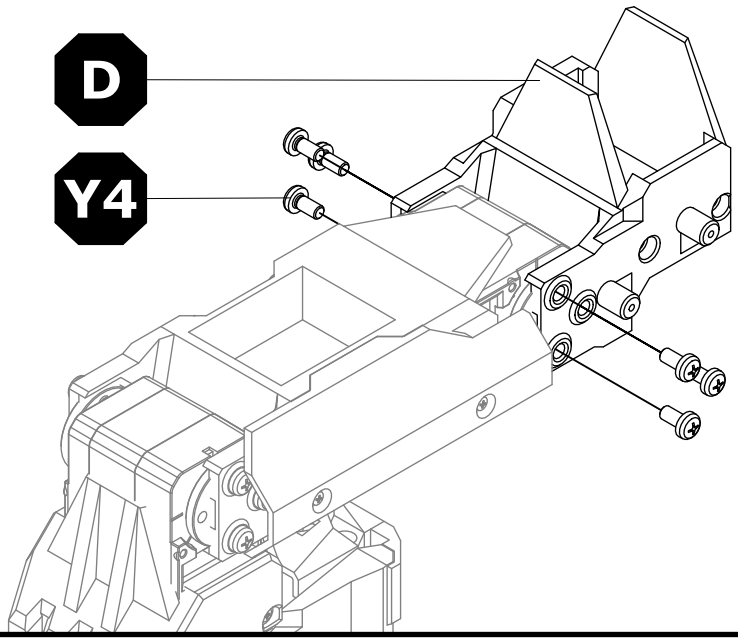

JOINT 3	
D	1x
SCREW M3x8	
Y4	6x

ELROBOT

STEP 20

! GENTLY PRESS THE SERVO INTO THE COMPONENT FOOTPRINT. ENSURE IT IS FULLY SEATED !

CONNECT THE SERVO 4 WIRE TO THE SERVO 3 AS SHOWN ON THE IMAGE.

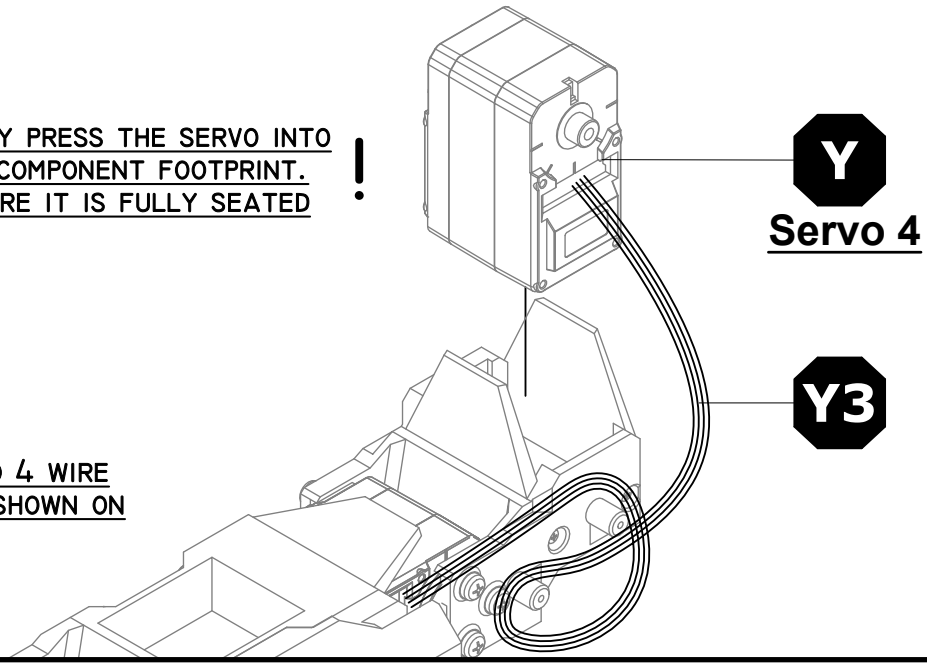

SERVO ST3215
Y 1x

SERVO WIRES
Y3 1x

STEP 21

SELF-TAPPING SCREW M2X6
Y5 4x

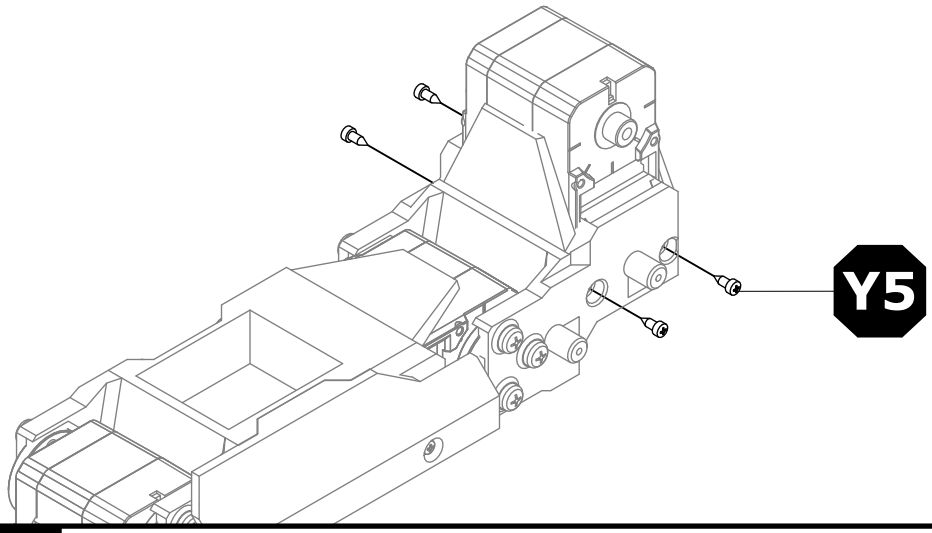

STEP 22

JOINT 3 SHIELD DRIVE SIDE
N 1x

SELF-TAPPING SCREW M2X6
Y5 2x

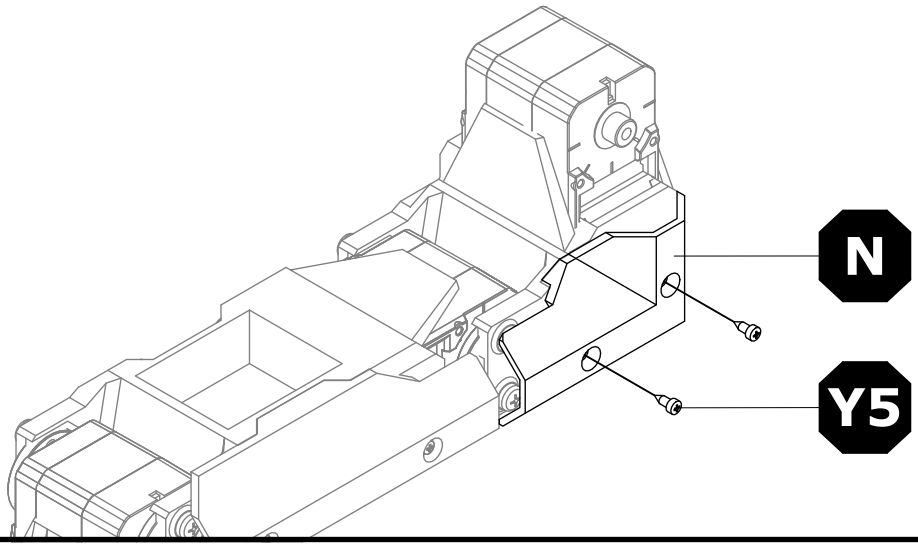

ELROBOT

STEP 23

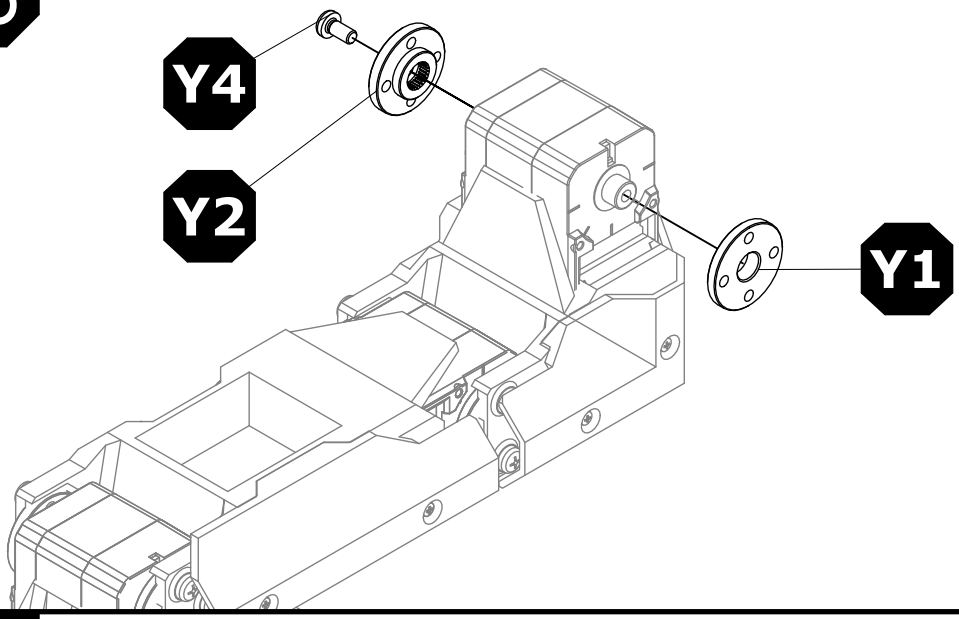

IDLER HORN	
Y1	1x
SERVO HORN	
Y2	1x
SCREW M3X8	
Y4	1x

STEP 24

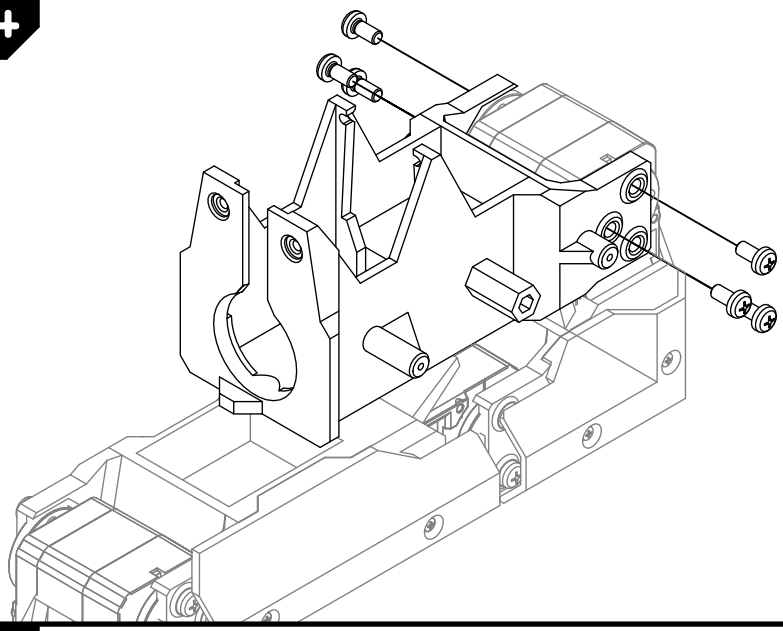

JOINT 4	
E	1x
SCREW M3X8	
Y4	6x

STEP 25

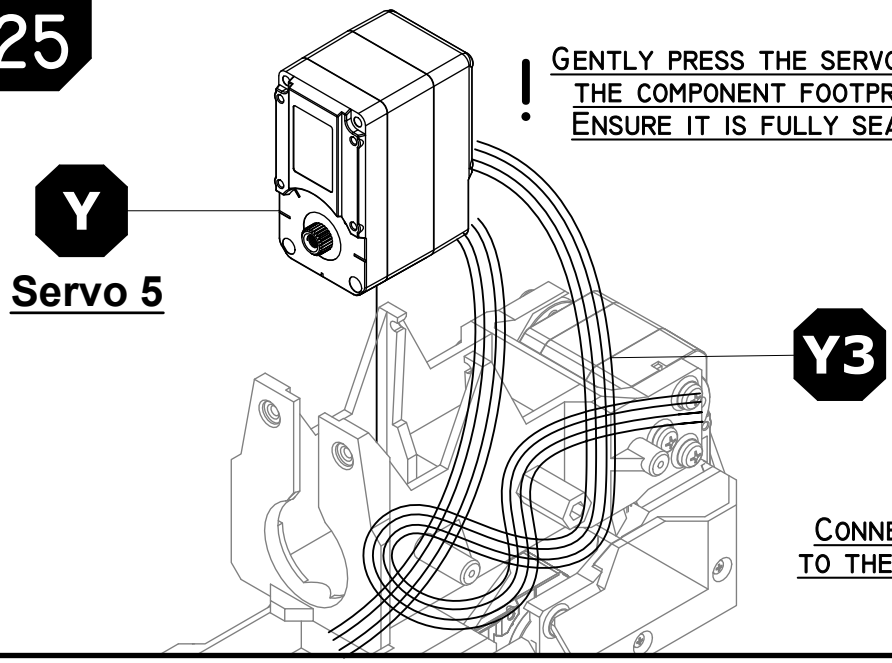

! GENTLY PRESS THE SERVO INTO THE COMPONENT FOOTPRINT. ENSURE IT IS FULLY SEATED !

CONNECT THE SERVO 5 WIRE TO THE SERVO 4 AS SHOWN ON THE IMAGE.

SERVO ST3215	
Y	1x
SERVO WIRES	
Y3	2x

ELROBOT

STEP 26

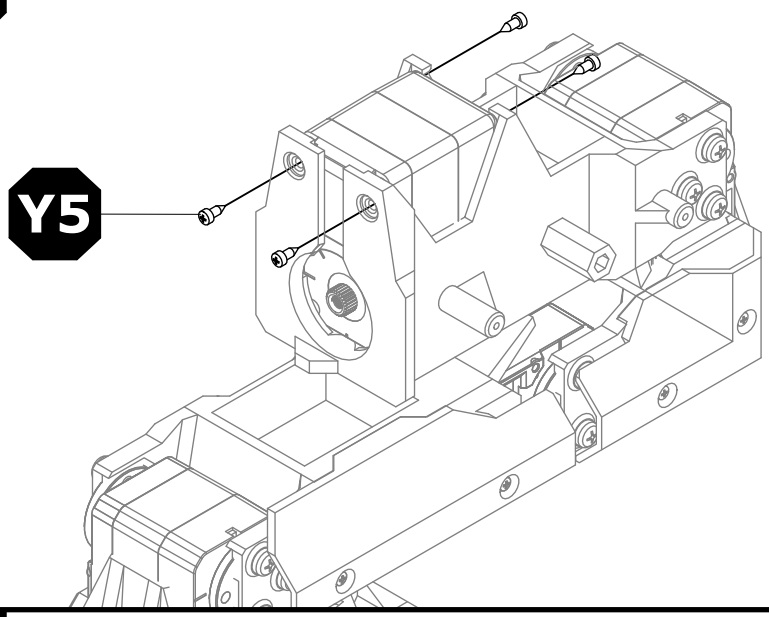

SELF-TAPPING SCREW M2x6

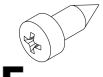

Y5 **4x**

STEP 27

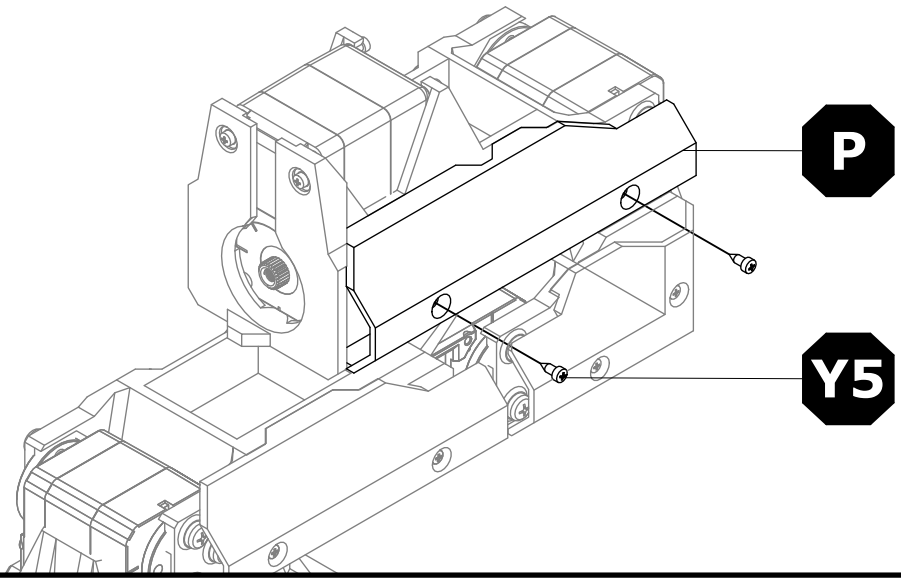

JOINT 4 SHIELD DRIVE SIDE

P **1x**

SELF-TAPPING SCREW M2x6

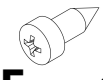

Y5 **2x**

STEP 28

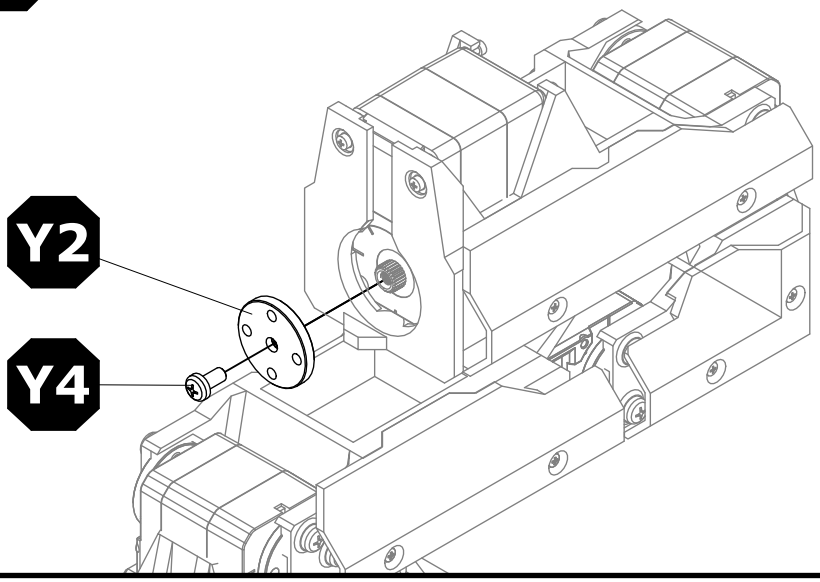

SERVO HORN

Y2 **1x**

SCREW M3x8

Y4 **1x**

ELROBOT

STEP 29

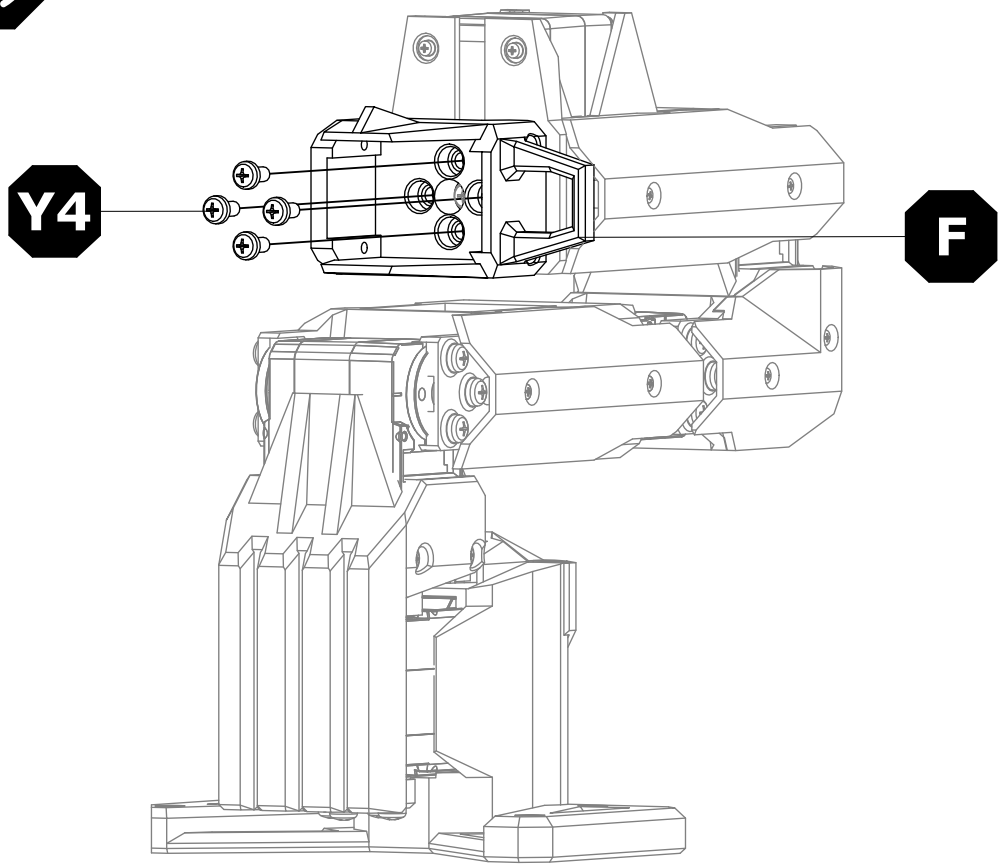

JOINT 5

F **1x**

SCREW M3x8

Y4 **1x**

STEP 30

SERVO ST3215

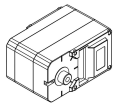

Y **1x**

! GENTLY PRESS THE SERVO INTO THE COMPONENT FOOTPRINT. ENSURE IT IS FULLY SEATED !

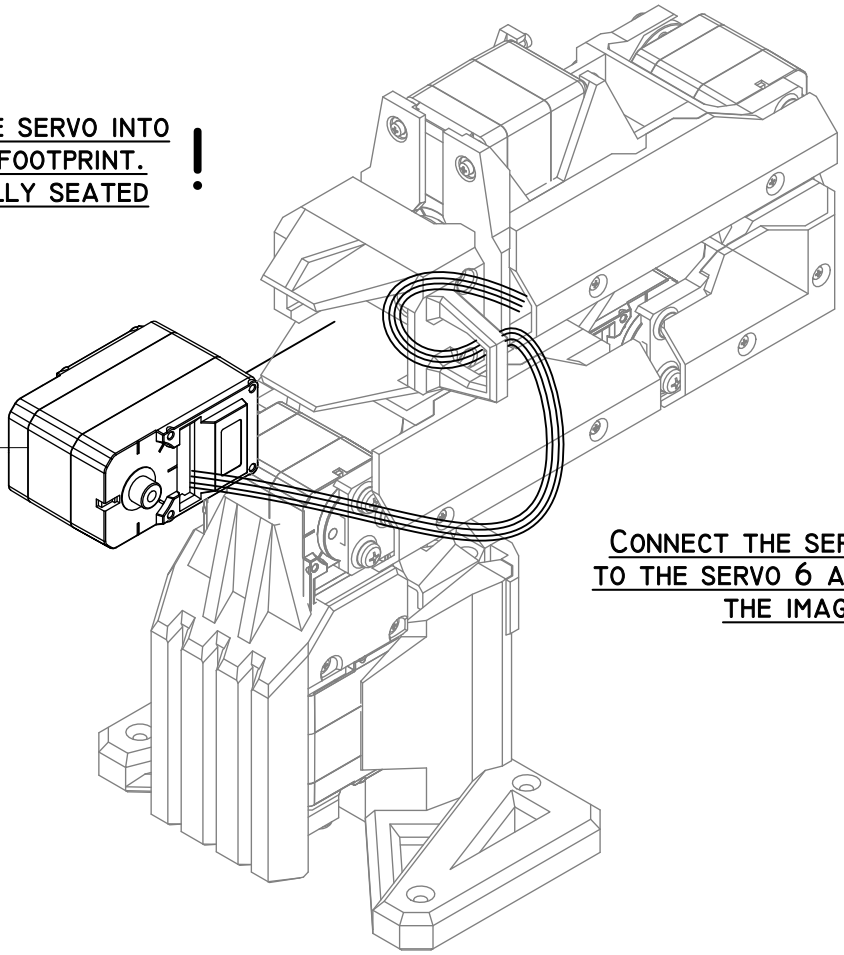

CONNECT THE SERVO 5 WIRE TO THE SERVO 6 AS SHOWN ON THE IMAGE.

ElRobot

Step 31

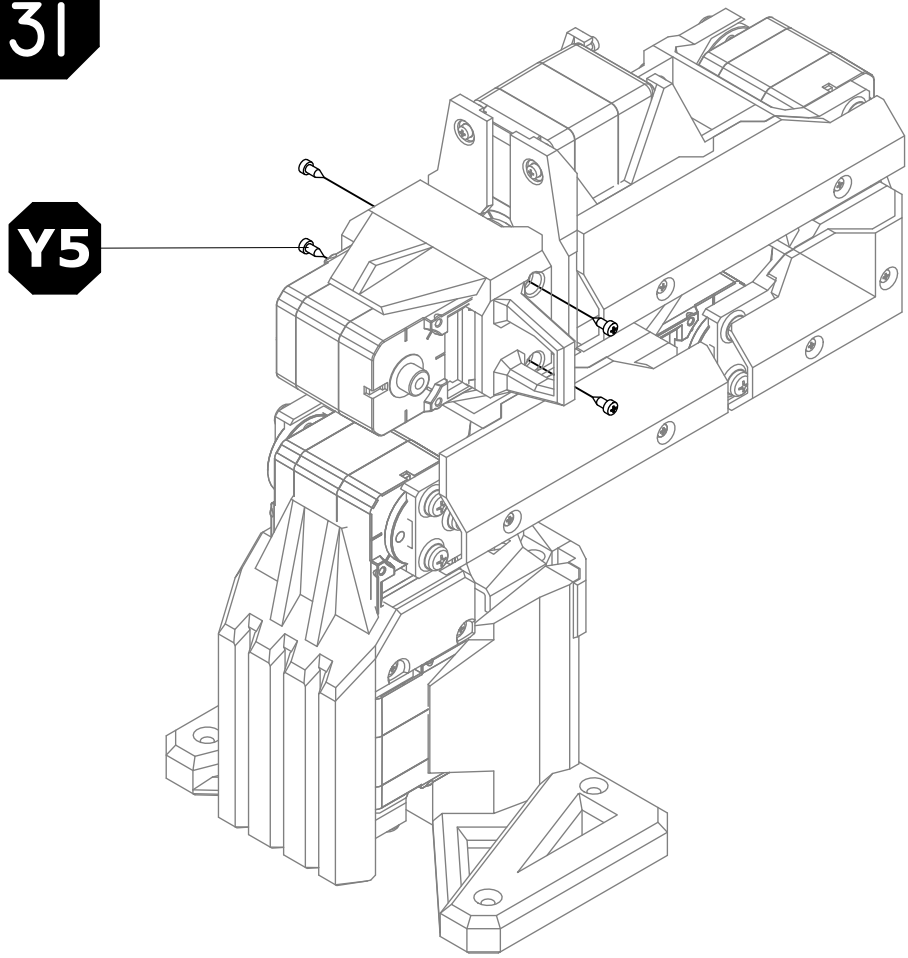

Self-tapping Screw M2x6

Y5 **4x**

Step 32

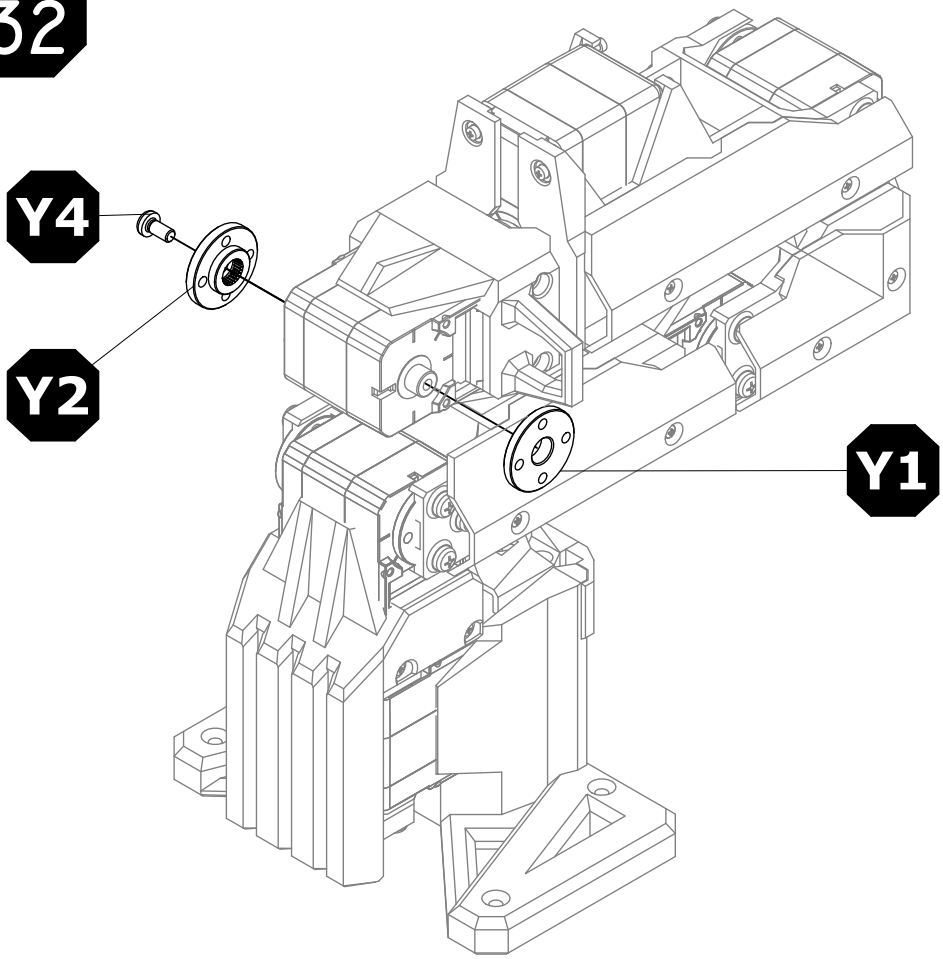

Idler Horn

Y1 **1x**

Servo Horn

Y2 **1x**

Screw M3x8

Y4 **1x**

ELROBOT

STEP 33

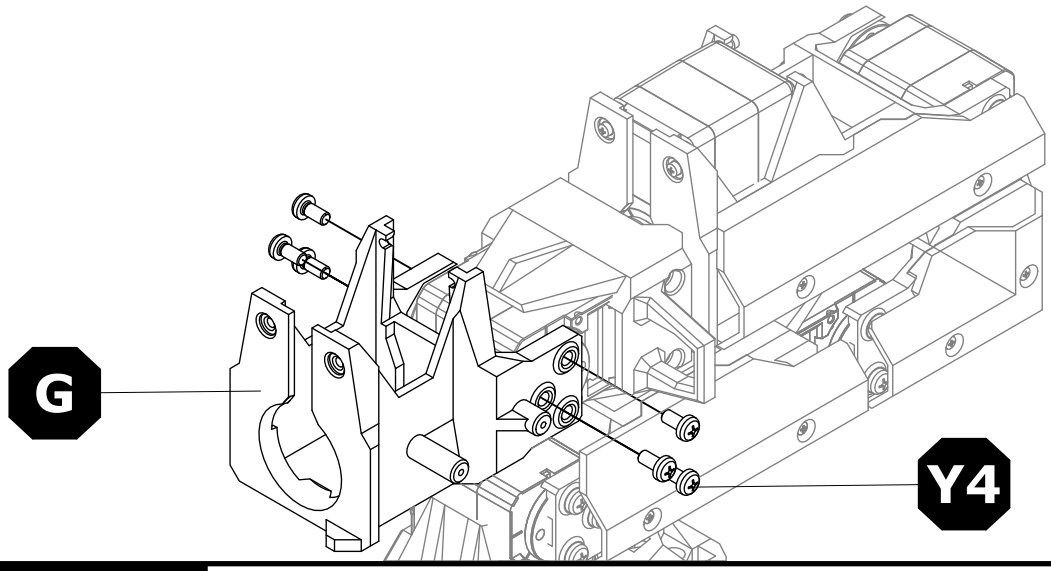

JOINT 6

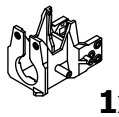

G 1x

SCREW M3X8

Y4 6x

STEP 34

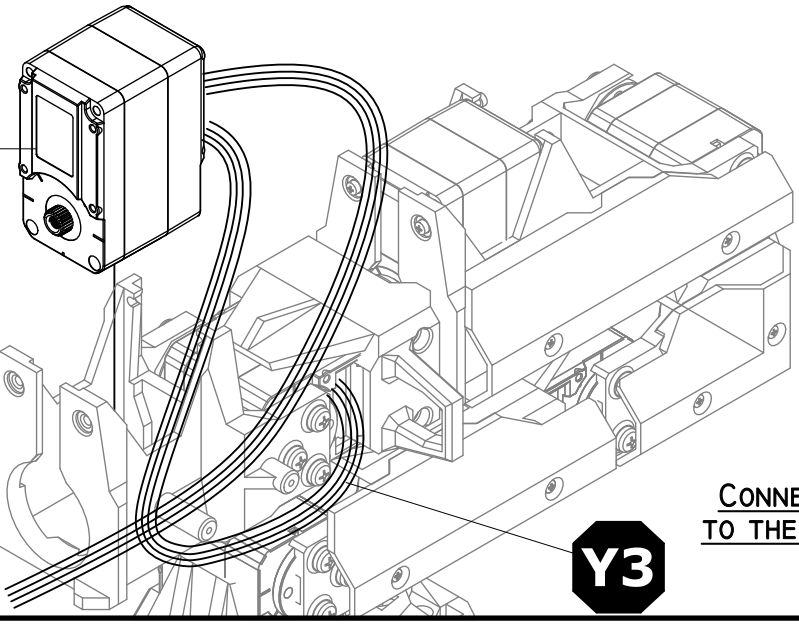

Servo 7

!

GENTLY PRESS THE SERVO INTO THE COMPONENT FOOTPRINT. ENSURE IT IS FULLY SEATED

!

CONNECT THE SERVO 5 WIRE TO THE SERVO 6 AS SHOWN ON THE IMAGE.

SERVO ST3215

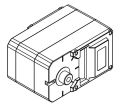

Y 1x

SERVO WIRES

Y3 2x

STEP 35

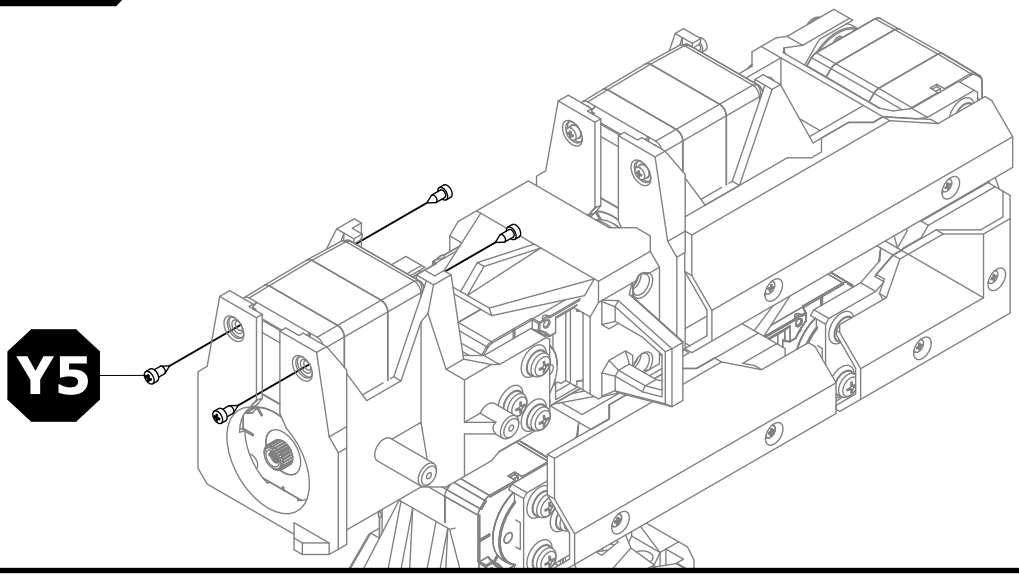

SELF-TAPPING SCREW M2X6

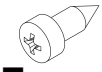

Y5 4x

ELROBOT

STEP 36

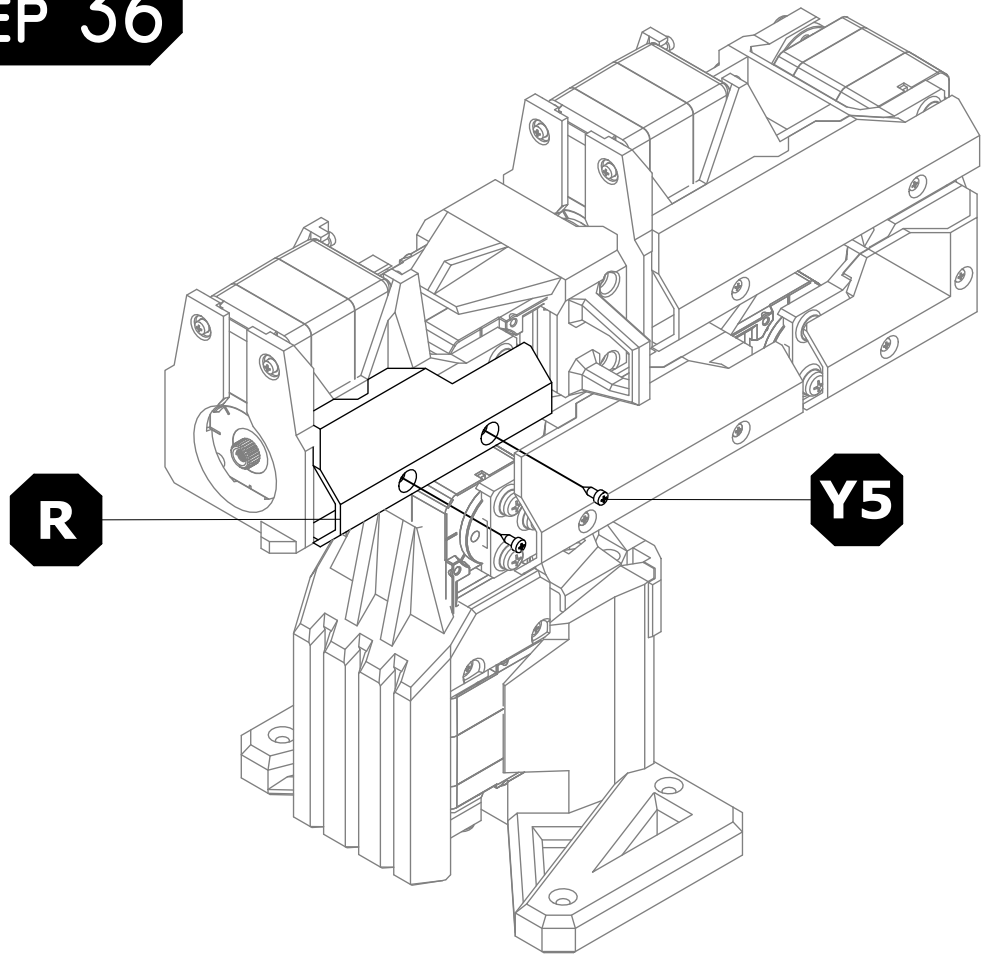

JOINT 6 SHIELD DRIVE SIDE	
R	1x
SELF-TAPPING SCREW M2x6	
Y5	2x

STEP 37

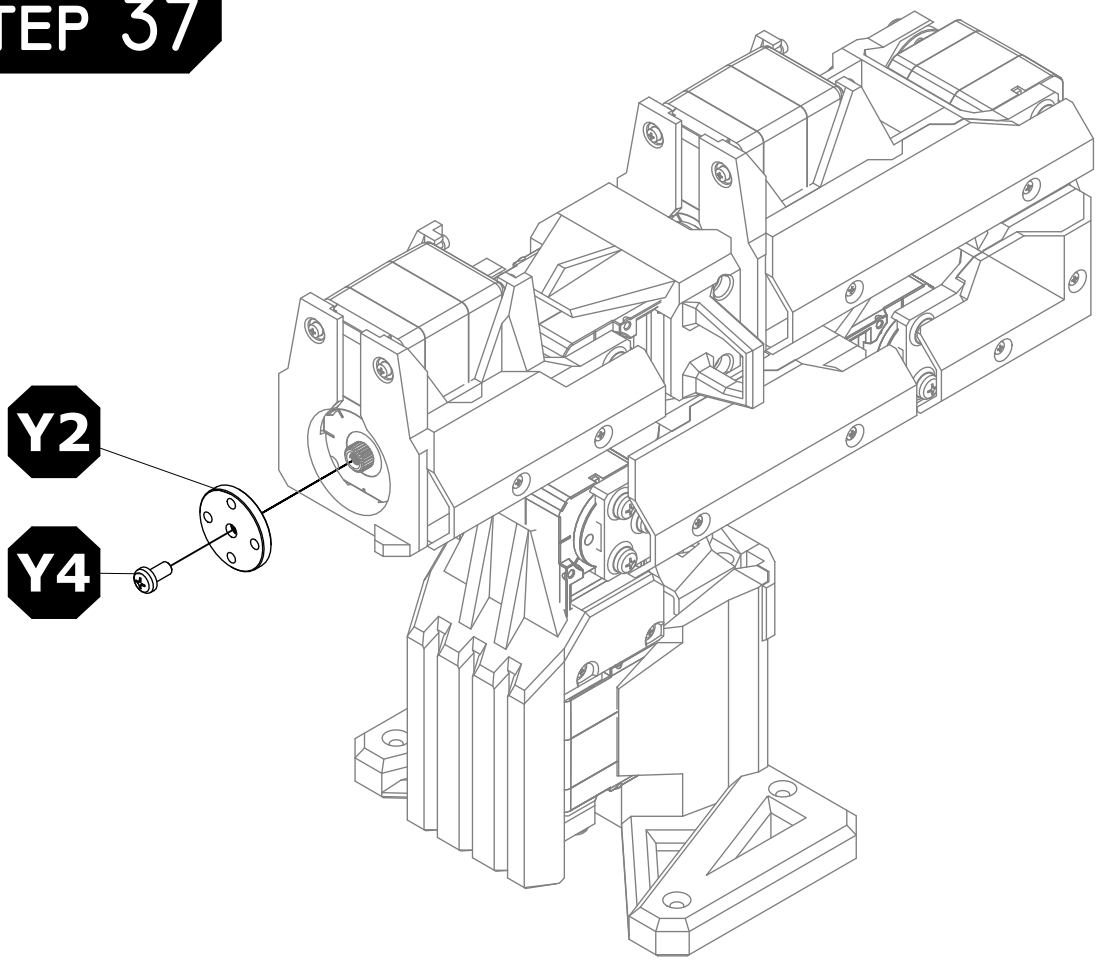

SERVO HORN	
Y2	1x
SCREW M3x8	
Y4	1x

ElRobot

Step 38

Gripper Base

H 1x

Screw M3x8

Y4 1x

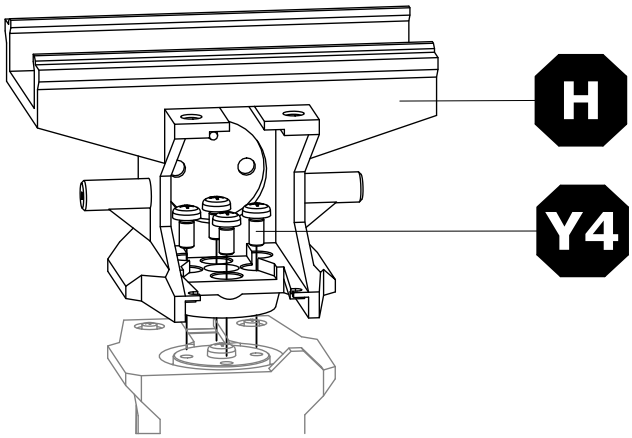

Step 39

Idler Horn

Y1 1x

! Place the part as shown on the image

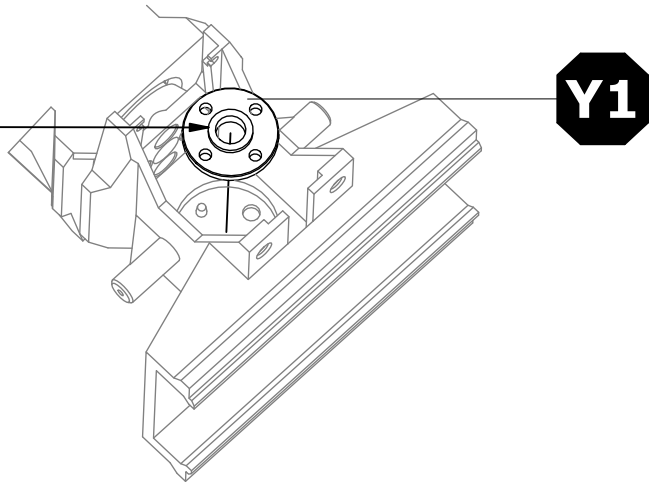

Step 40

Connect the servo 7 wire to the servo 8 as shown on the image.

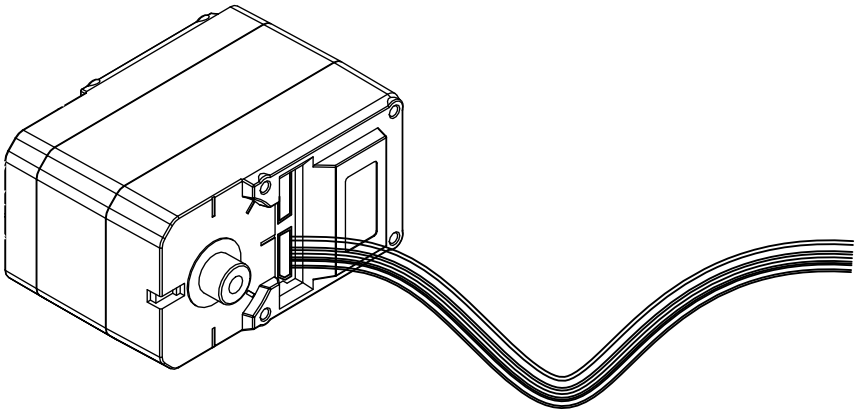

ELROBOT

STEP 41

Servo ST3215

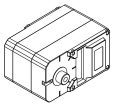

Y **1x**

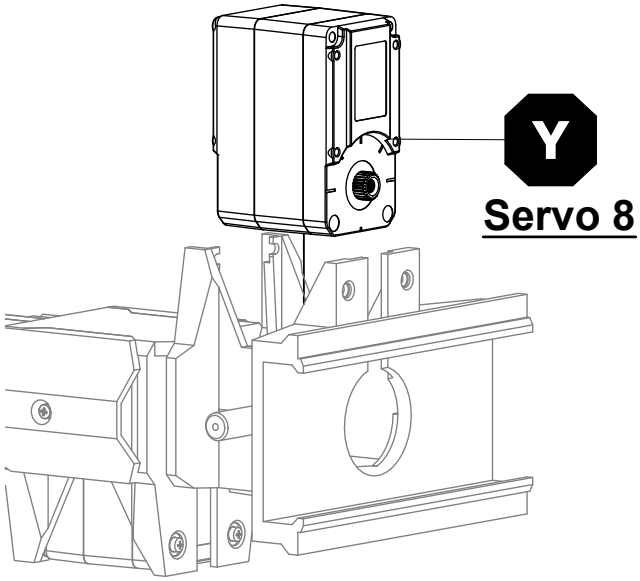

! GENTLY PRESS THE SERVO INTO THE COMPONENT FOOTPRINT. ENSURE IT IS FULLY SEATED !

STEP 42

SELF-TAPPING SCREW M2x6

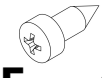

Y5 **2x**

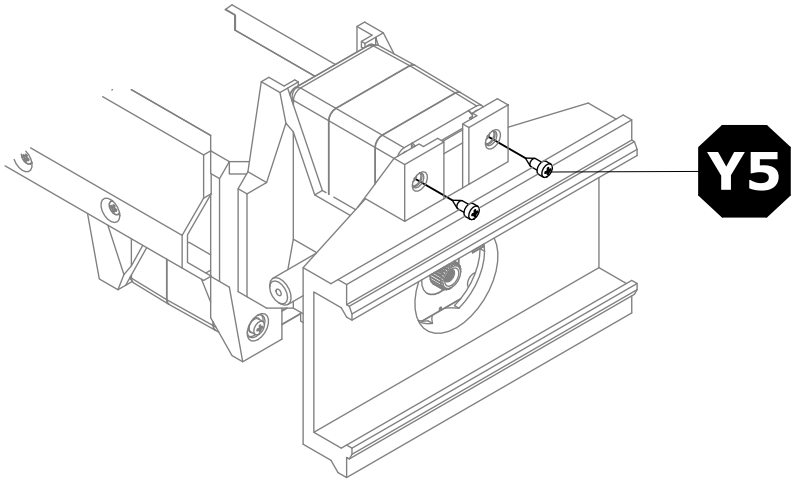

STEP 43

WIRING BRACKET

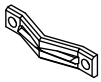

V **1x**

SELF-TAPPING SCREW M2x6

Y5 **2x**

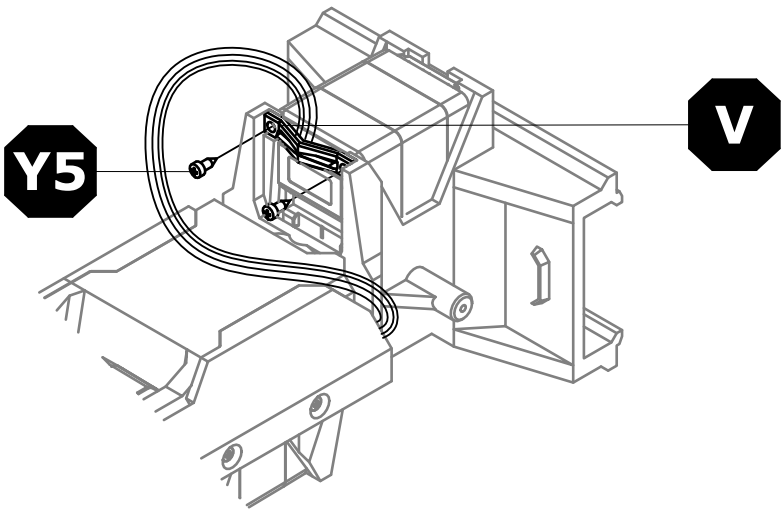

! USE THE BRACKET TO SECURE THE WIRE !

ElRobot

Step 44

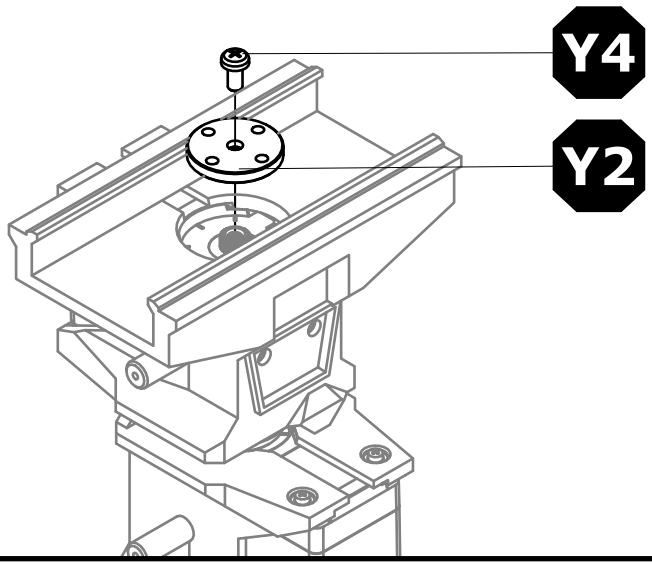

Servo Horn	
Y2	1x
Screw M3x8	
Y4	1x

Step 45

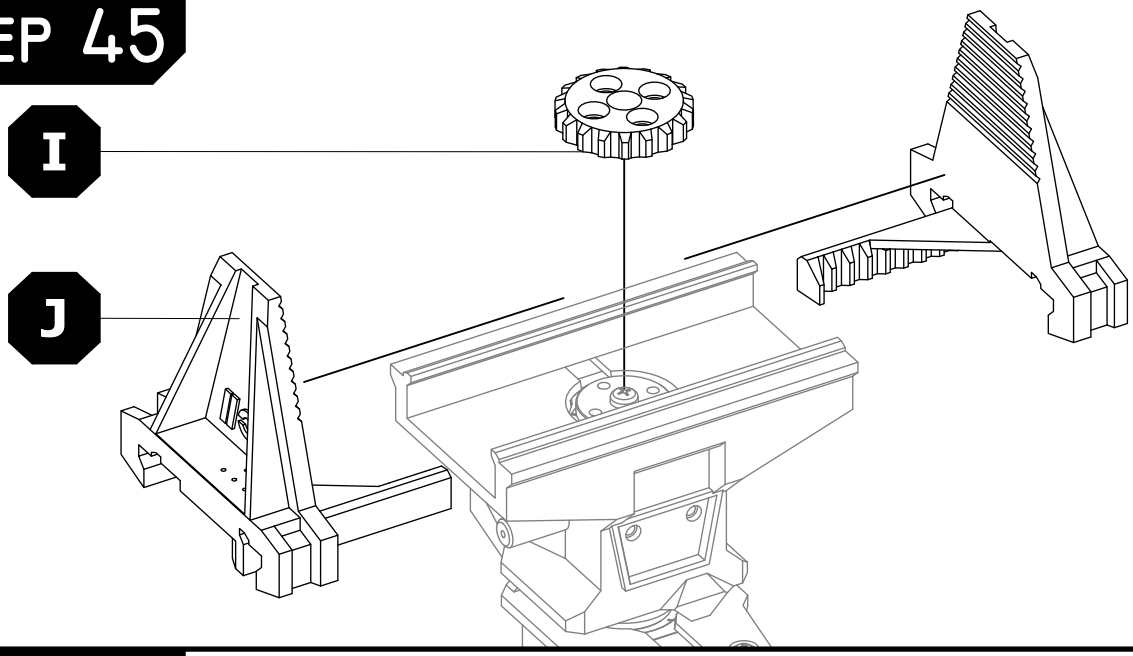

Gripper Gear	
I	1x
Gripper Jaw	
J	2x

Step 46

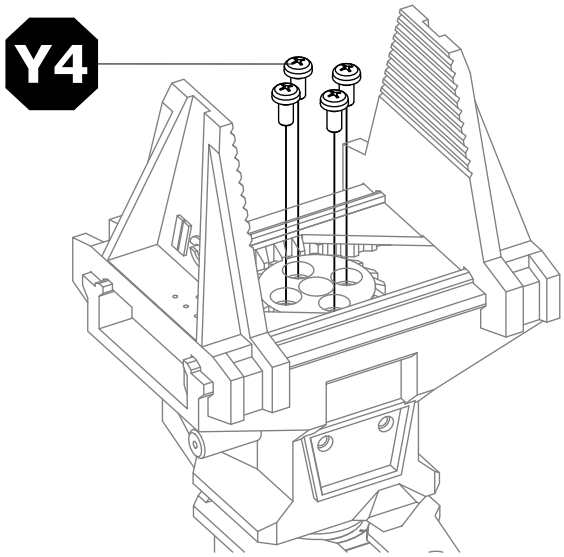

Screw M3x8	
Y4	4x

ElRobot

Step 47

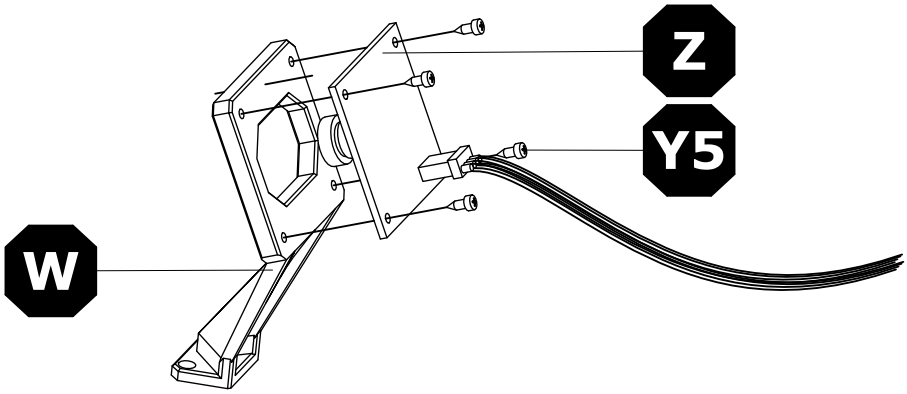

Camera Mount
G 1x

UVC Camera
Innomaker U20CAM
Z 1x

Self-tapping
Screw M2x6
Y5 4x

Step 48

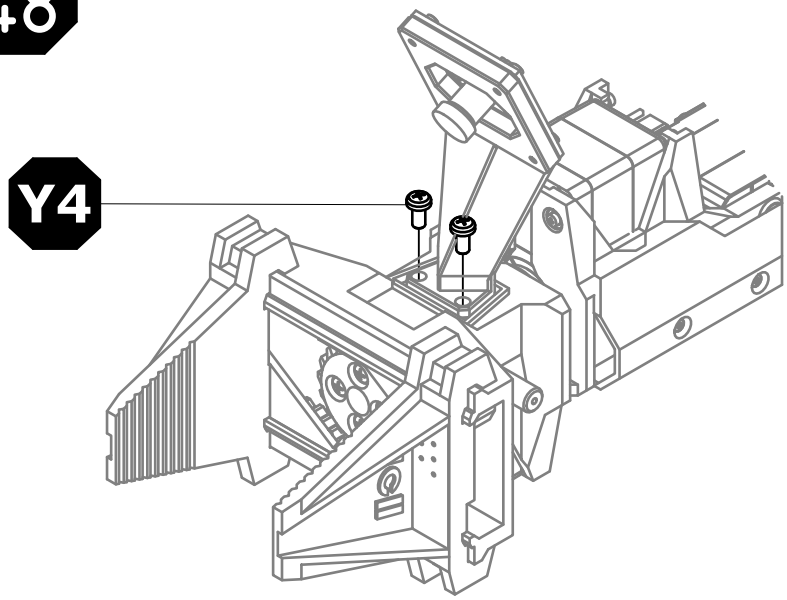

Screw M3x8
Y4 2x

Step 49

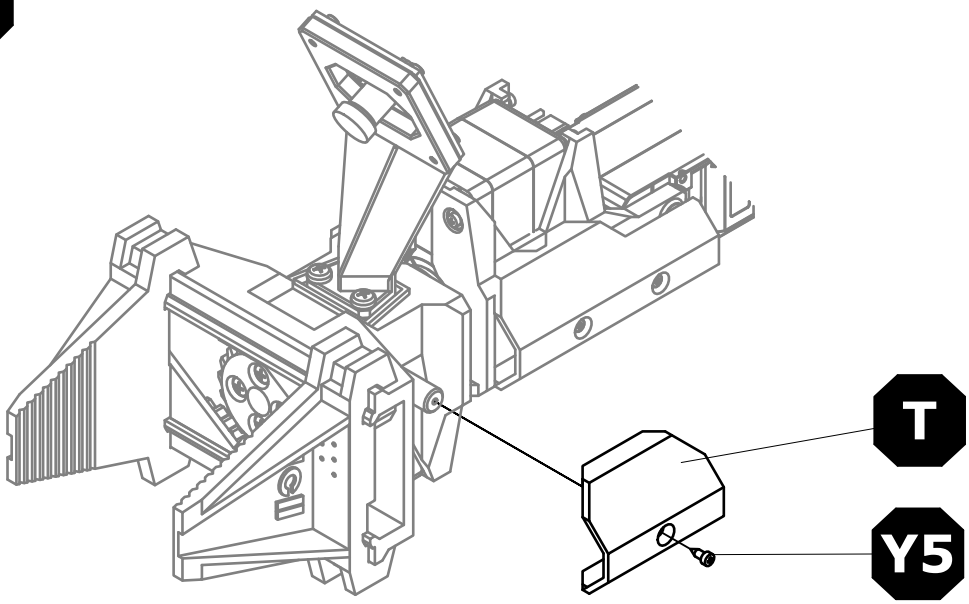

Gripper Base
Shield Drive
Side
T 1x

Self-tapping
Screw M2x6
Y5 1x

ElRobot

Step 50

! Route the Camera wires as shown on the image.
Secure the wires with shileds as shown in the next step. !

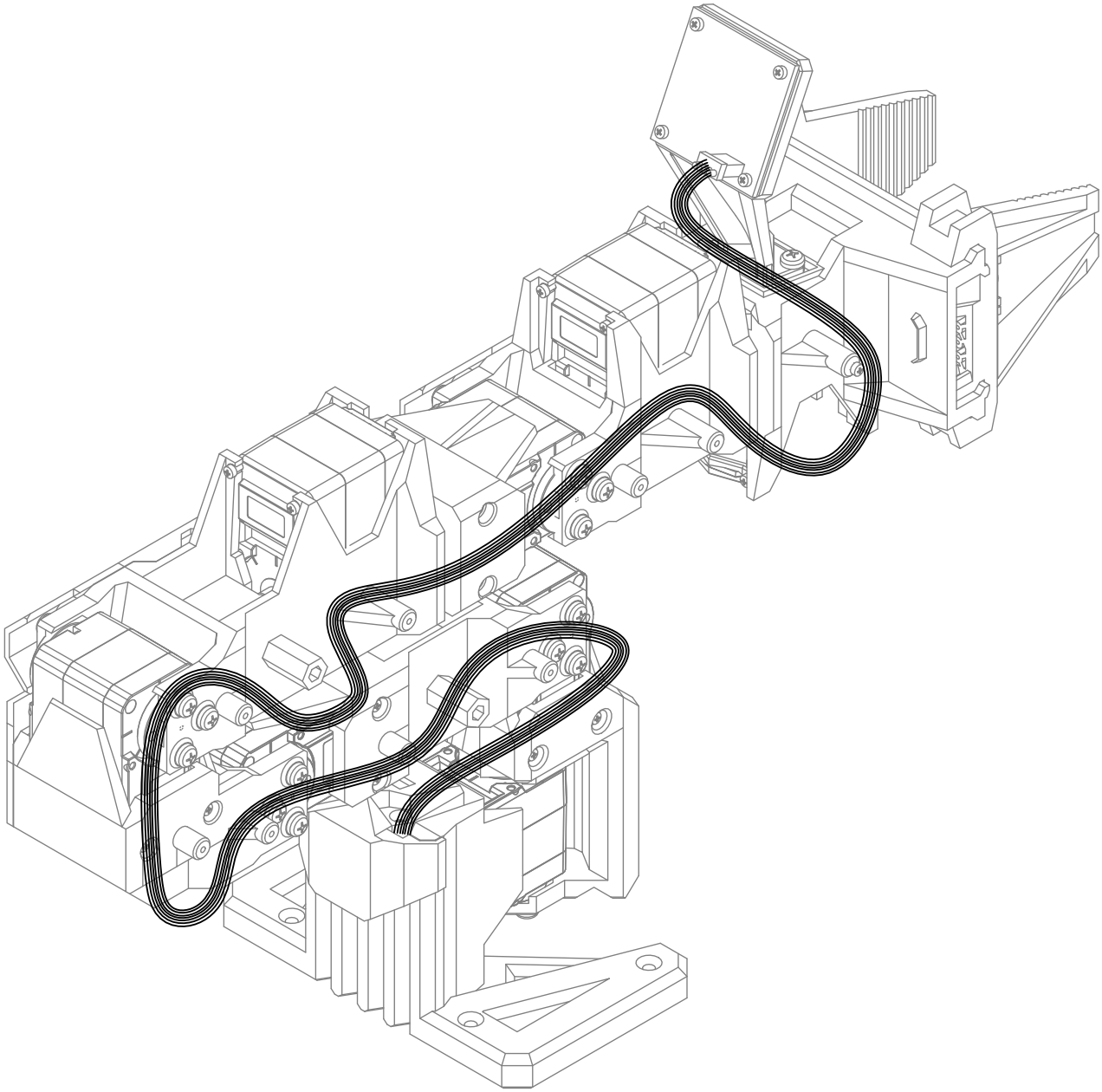

ElRobot

Step 51

Joint 2 Shield Camera Side	M 1x
Joint 3 Shield Camera Side	O 1x
Joint 4 Shield Camera Side	Q 1x
Joint 6 Shield Camera Side	S 1x
Gripper Base Shield Drive Side	U 1x
Self-tapping Screw M2x6	Y5 9x

! Starting assemble parts from the Camera to the Base. !

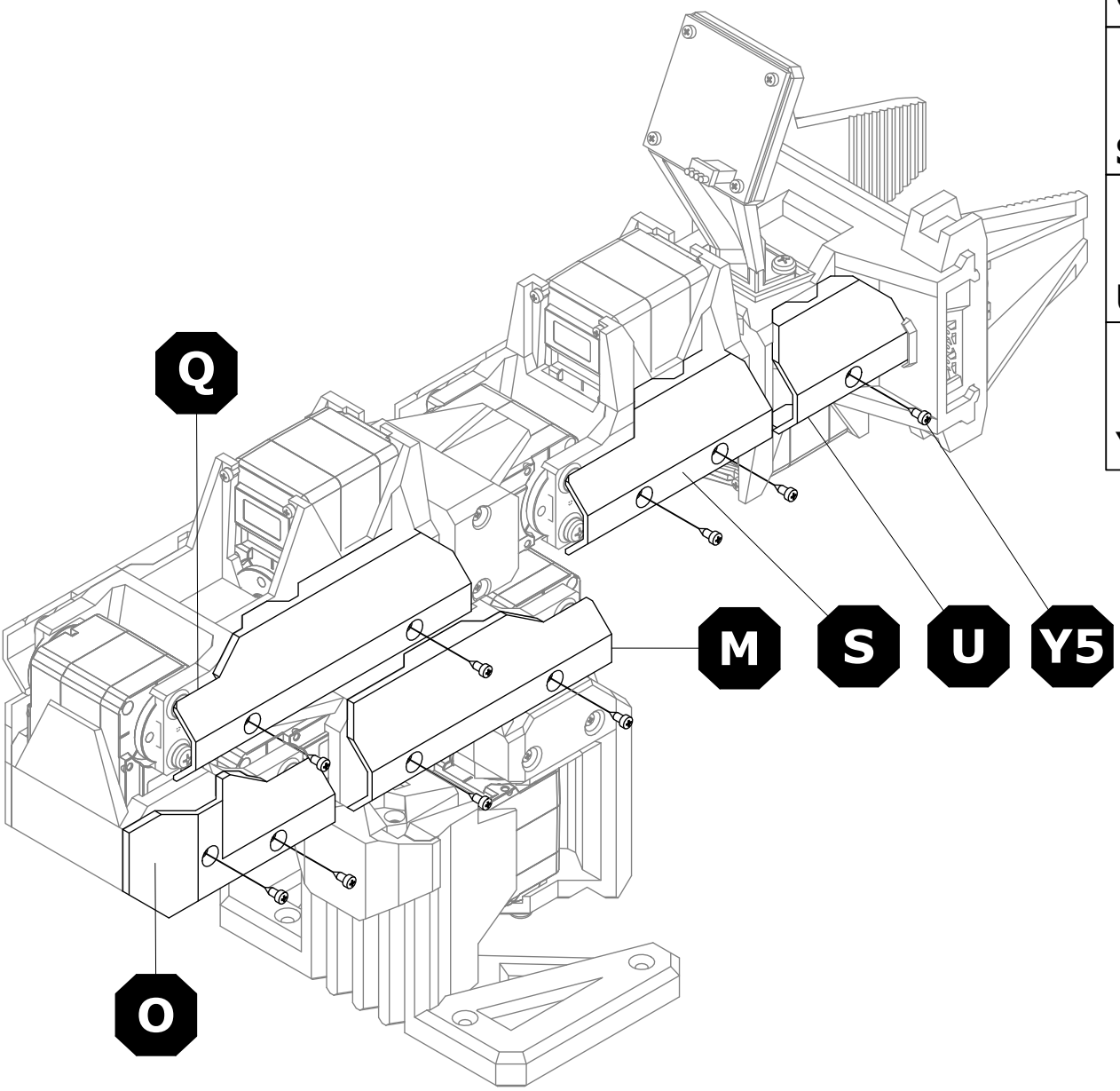

ELROBOT

STEP 52

SELF-TAPPING SCREW M2x6

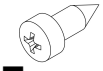
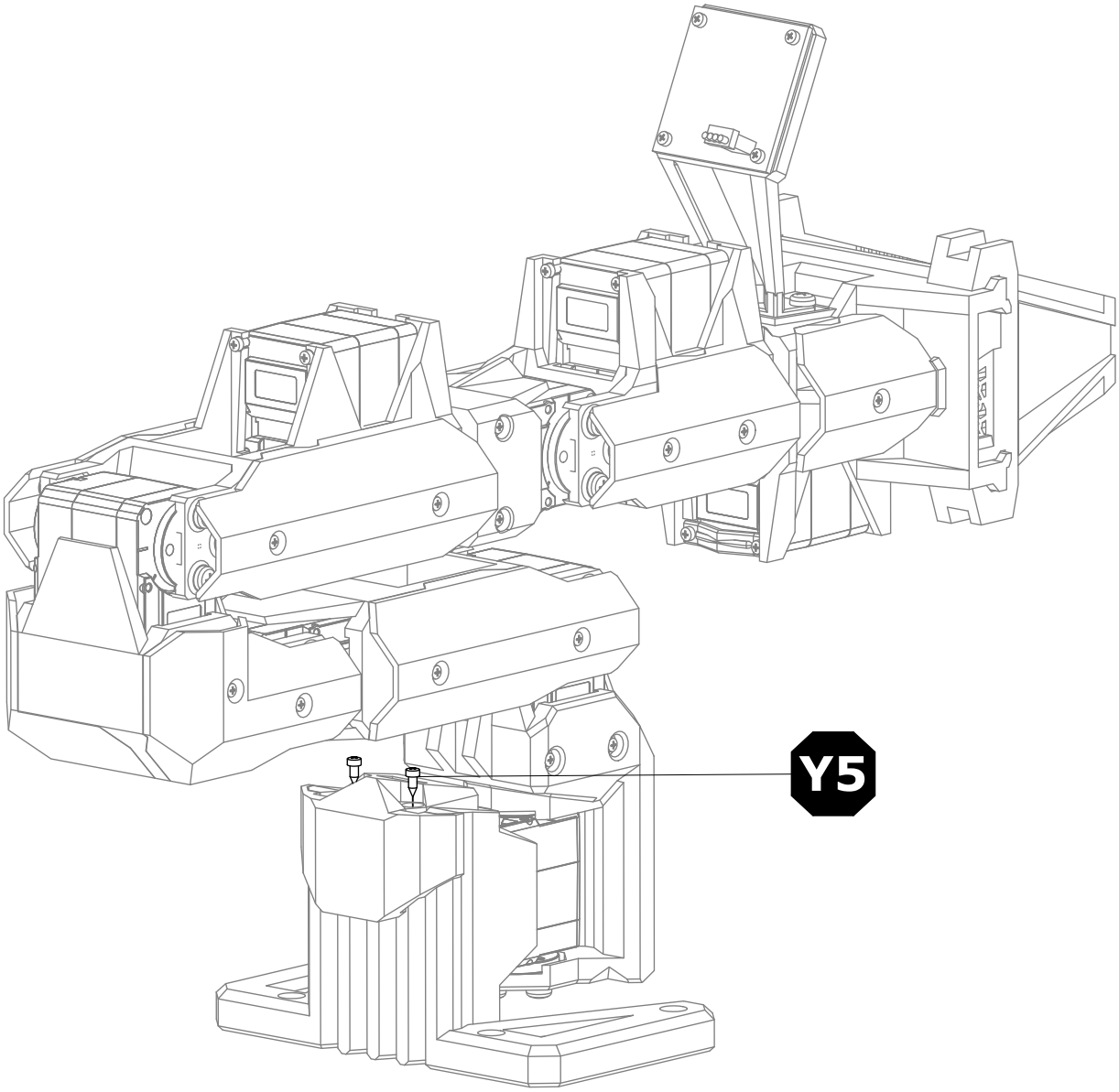
Y5 **2x**