# LEADER

HTTPS://NORMACORE.DEV/

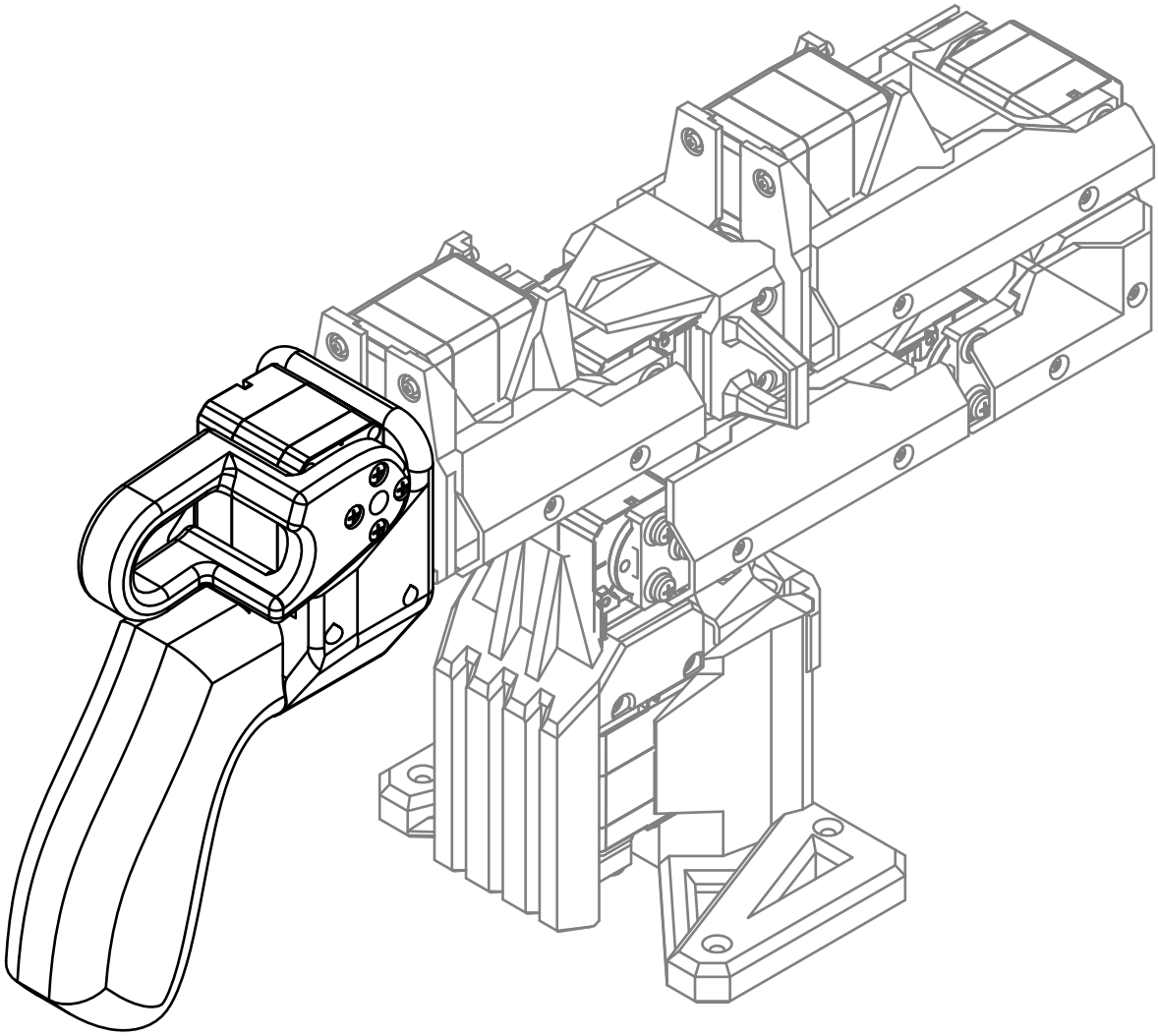

**This product includes parts based on the SO-ARM100 project by TheRobotStudio, which is licensed under the Apache License 2.0.**

# Leader

## 3D Printing Parts

| Handle S0101 | Trigger S0101 | Wrist Roll S0101 | |
|---|---|---|---|
| | | 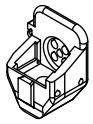 | |
| **A** **1x** | **B** **1x** | **C** **1x** | |

## Servo parts

| Servo ST3215 | Idler Horn | Servo wires | Screw M3x8 |
|---|---|---|---|
| 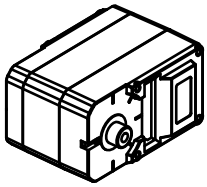 | 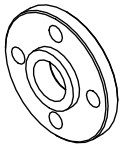 | | |
| **D** **1x** | **E** **1x** | **F** **1x** | **G** **9x** |
| Self-tapping Screw M2x6 | | | |
| 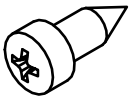 | | | |
| **H** **5x** | | | |

**To assemble ElRobot you will need:**
**screwdrivers PH1 and PH2,**
**stationery knife**
**and a good mood.**
**Good luck and have fun!**

# Leader

**Before assembling the leader,**
**the robot must be assembled as shown below.**
**It is important to securely attach the servo horn to the servo.**

(The robot`s servo horn and screw are not included in the gripper BOM)

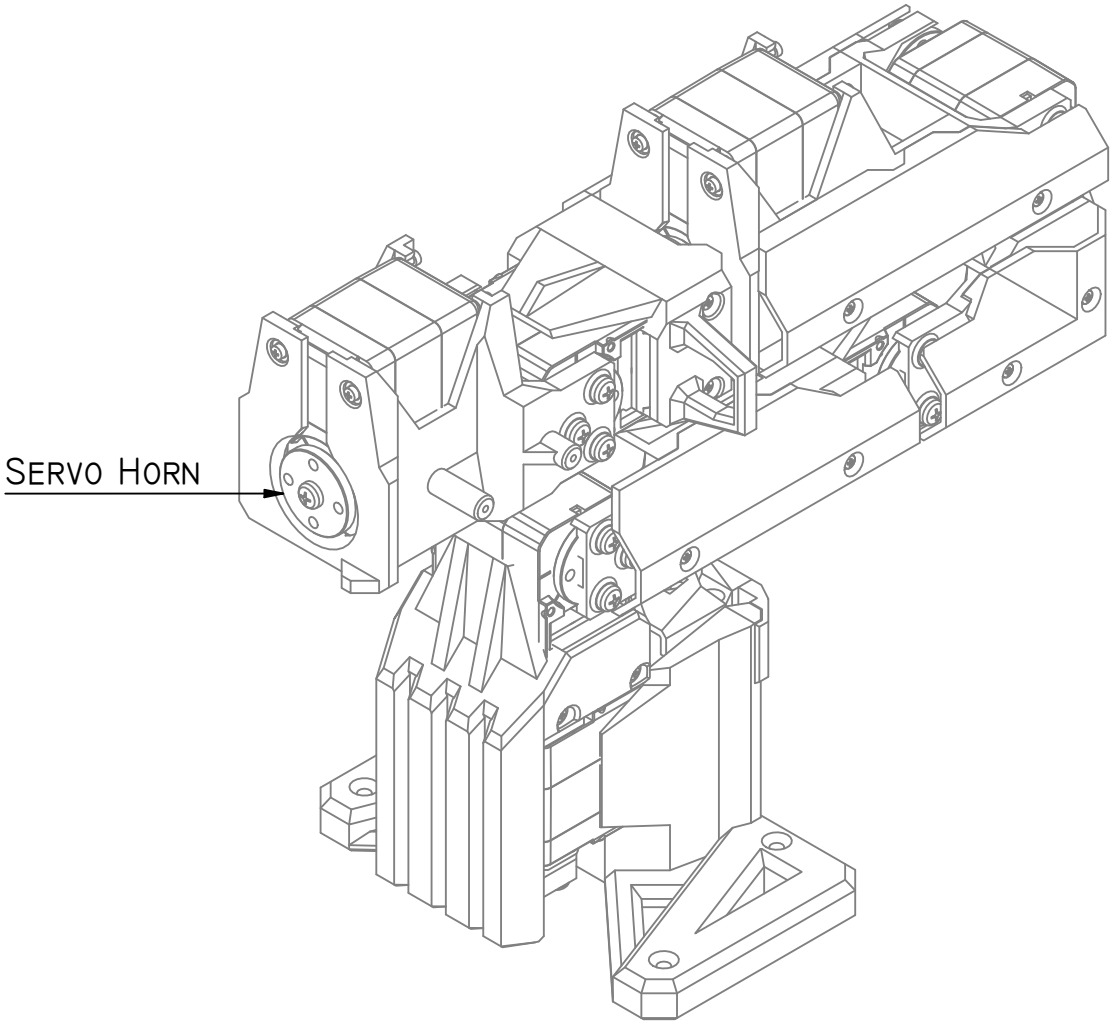

# Leader

## Step 1

**Remove supports and clean parts after 3D printing.**

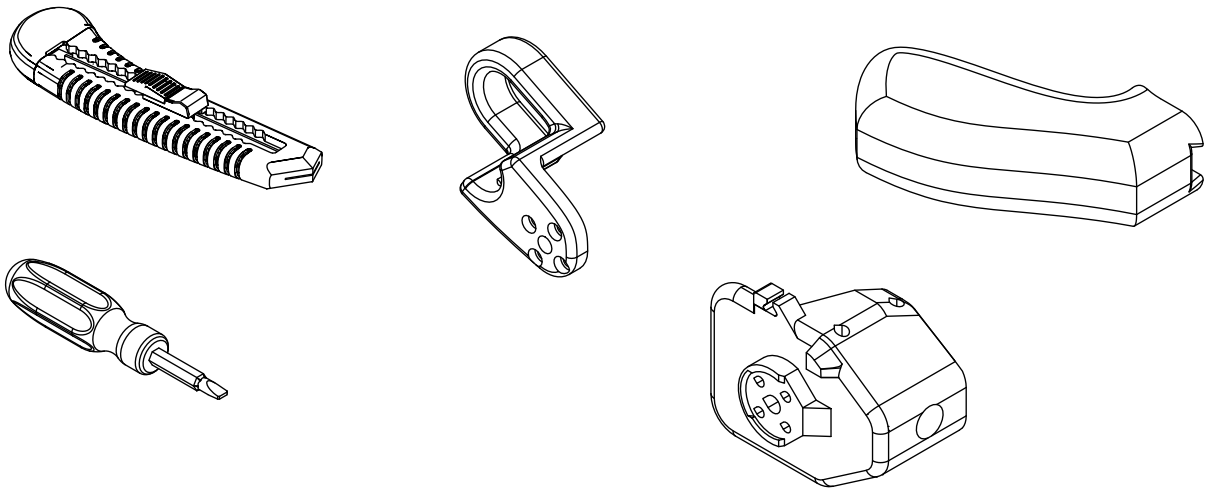

## Step 2

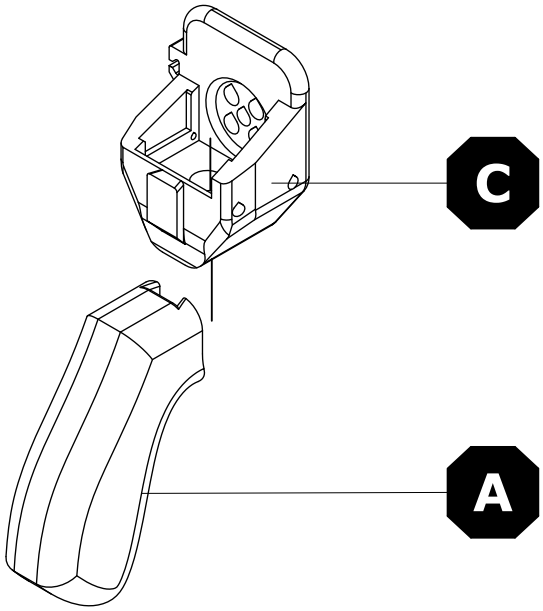


Handle S0101

**A** **1x**

Wrist Roll S0101

**C** **1x**

## Step 3

Self-tapping Screw M2x6

**H** **1x**

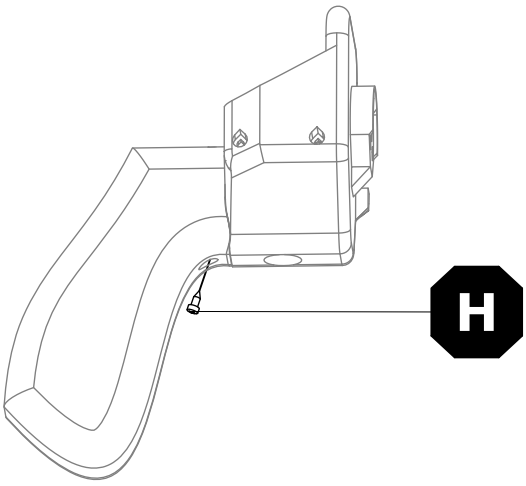

# Leader

## Step 4

Screw M3x8

**G** **4x**

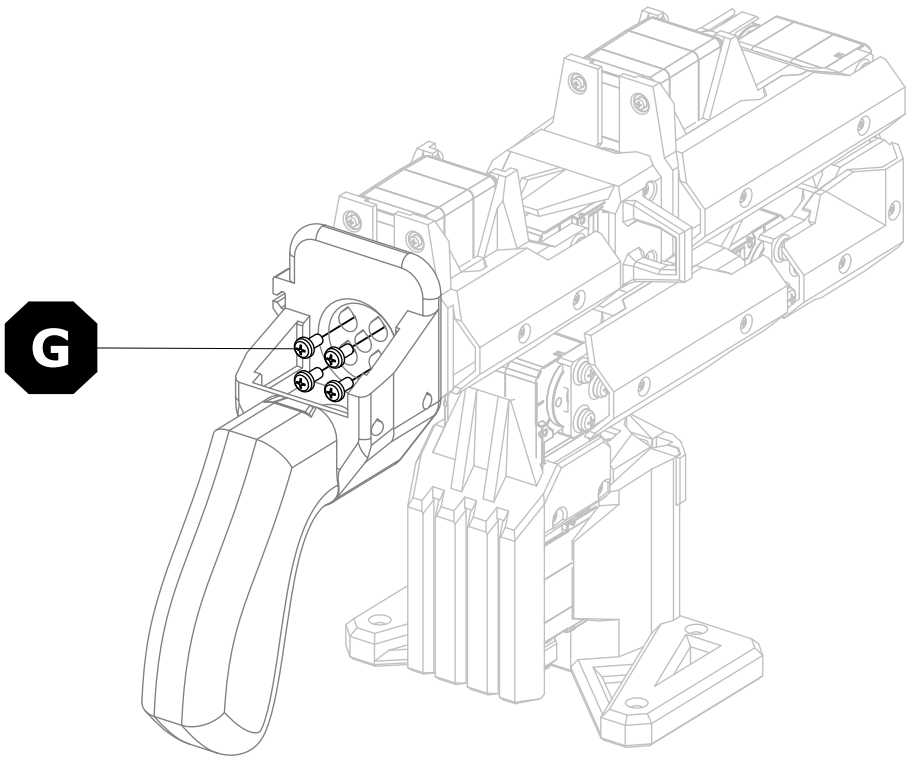


## Step 3

Servo ST3215

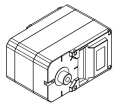

**D** **1x**

Servo Wires

**F** **1x**

! Gently press the servo into the component footprint. Ensure it is fully seated !

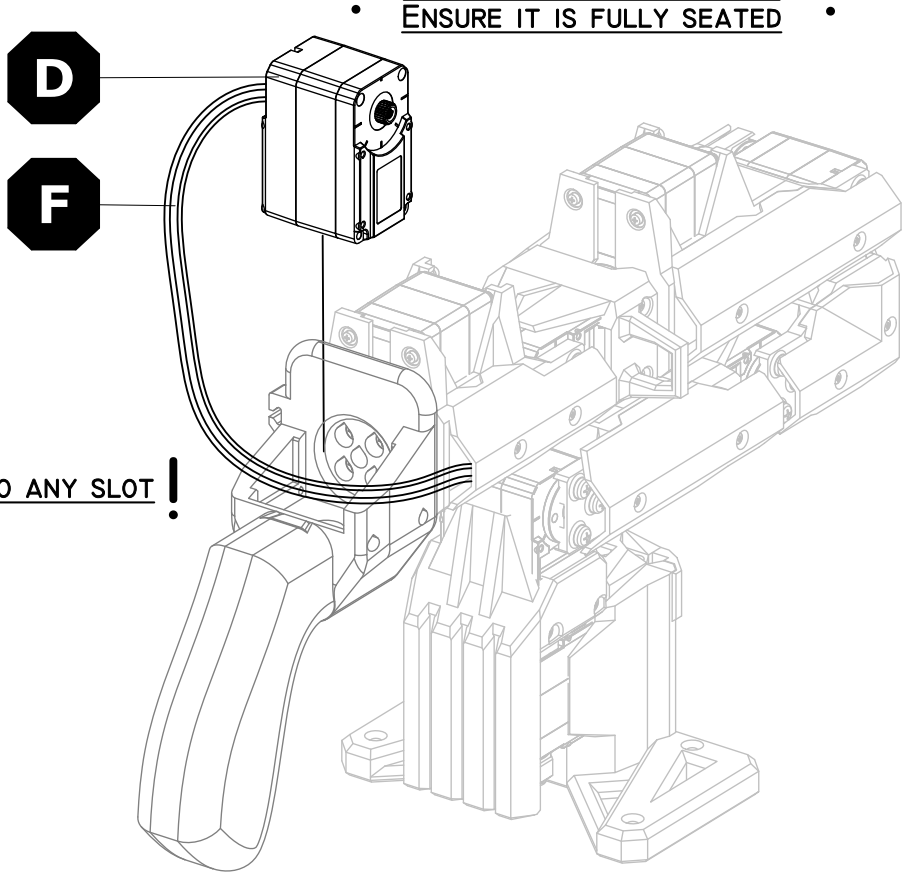


! Connect wires to any slot !

# Leader

## Step 4

Self-tapping Screw M2x6

**H** **4x**

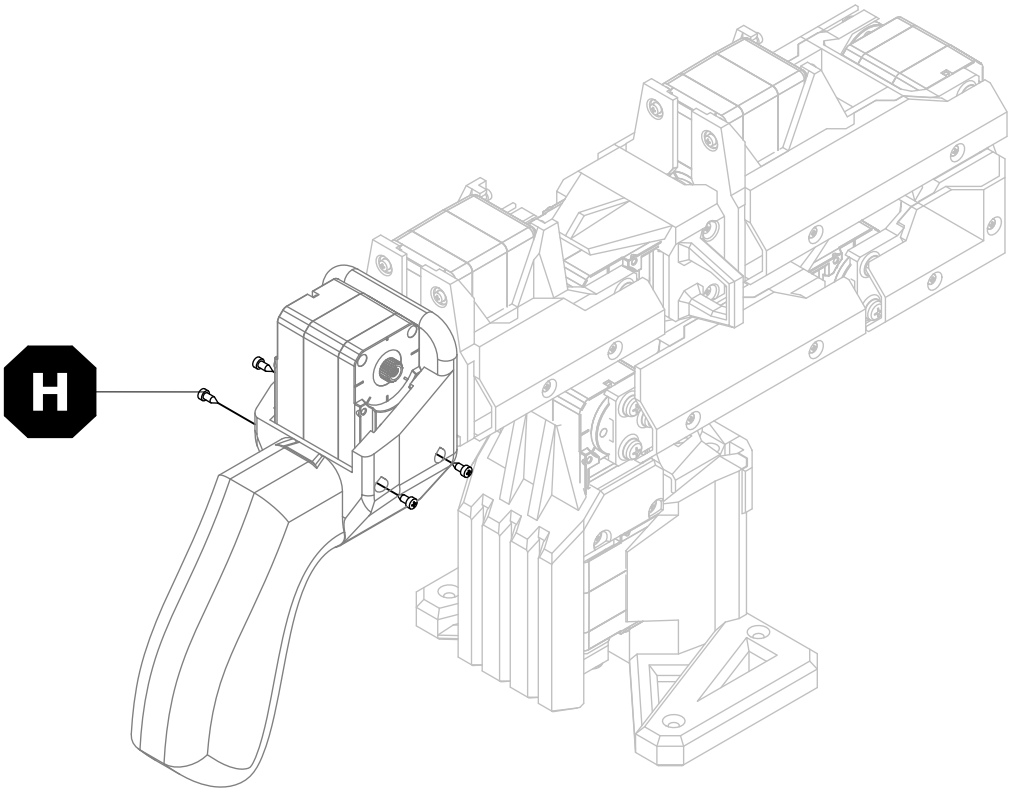


## Step 5

Idler Horn

**E** **1x**

Screw M3x8

**G** **1x**

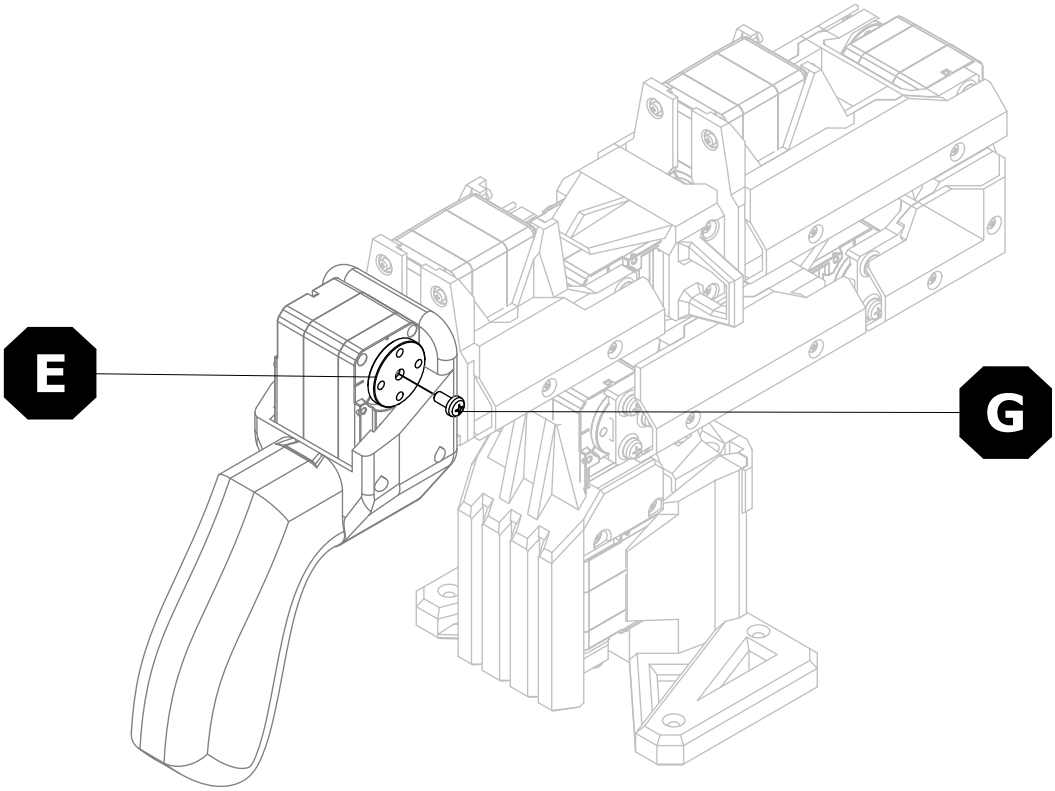

# Leader

| Trigger S0101 | |
|---|---|
| | |
| **B** | **1x** |
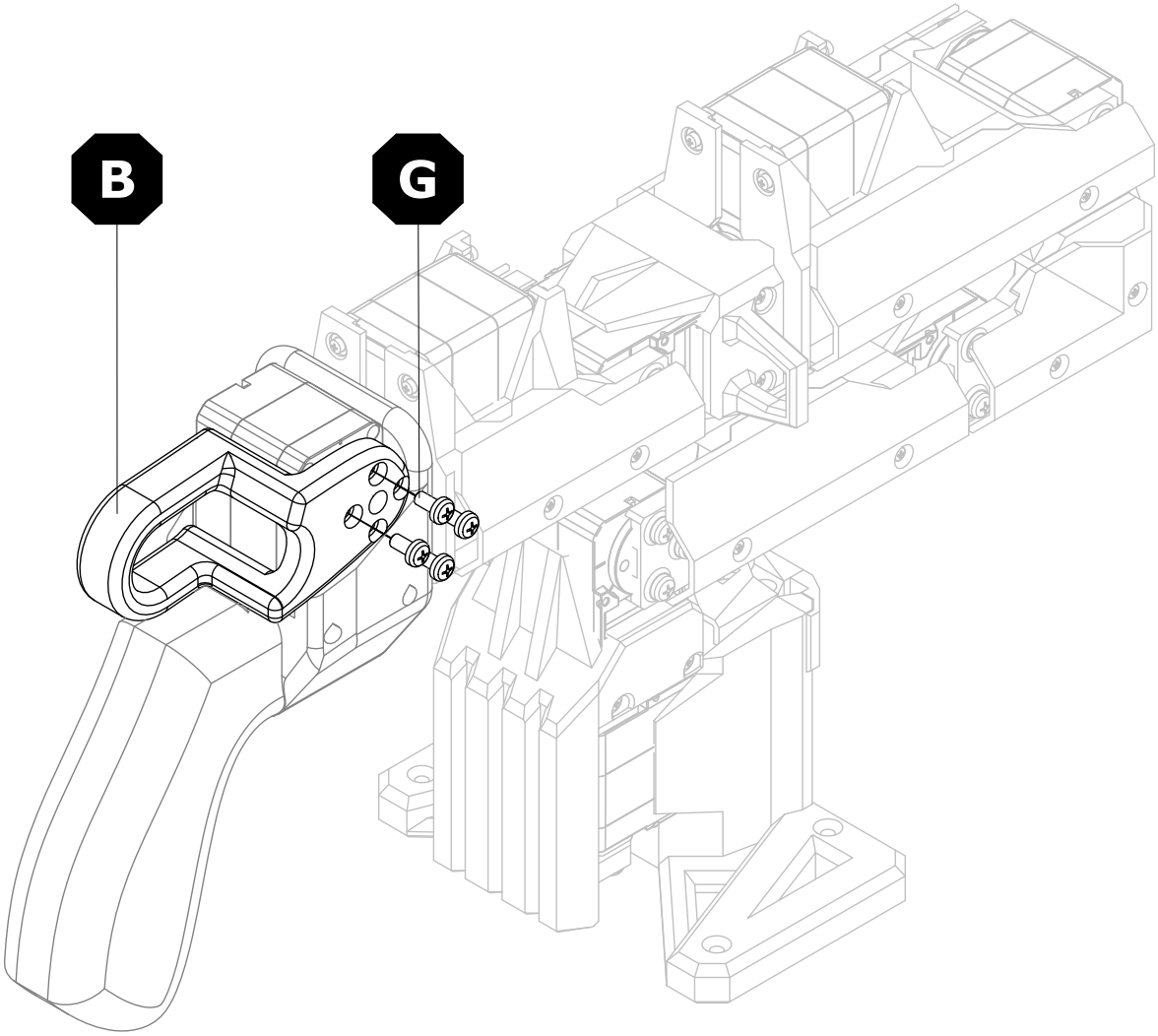
| Screw M3x8 | |
|---|---|
| | |
| **G** | **4x** |