Gripper

HTTPS://NORMACORE.DEV/

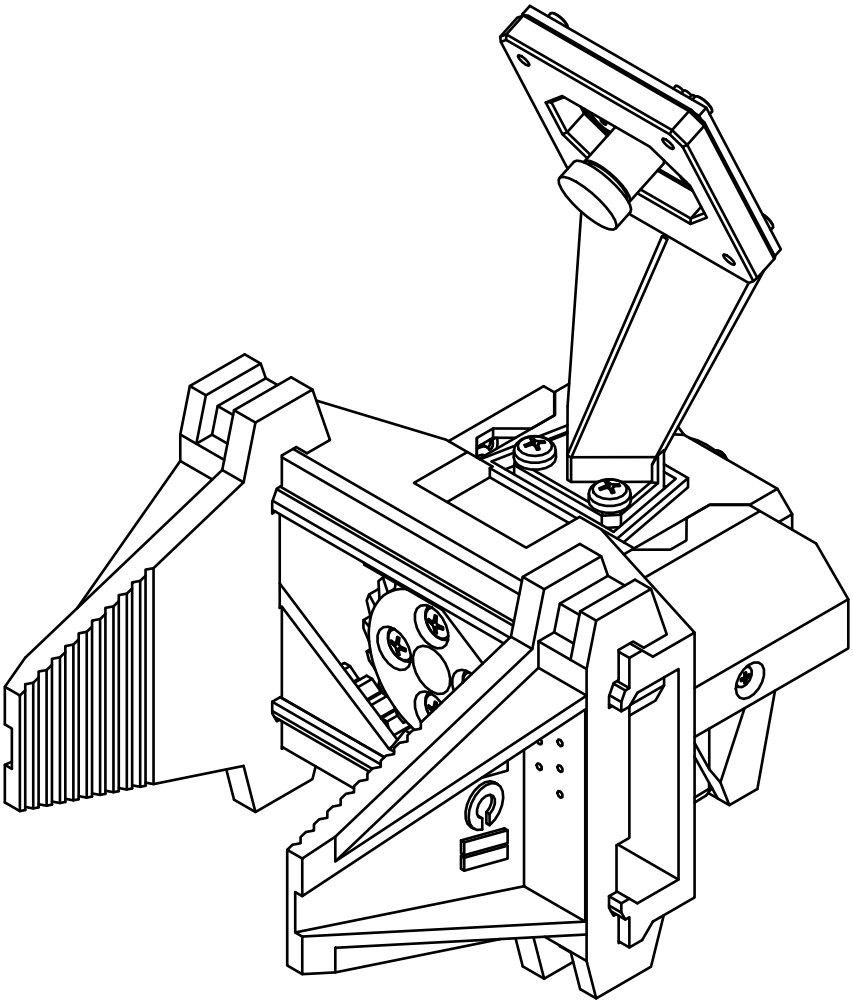

Gripper

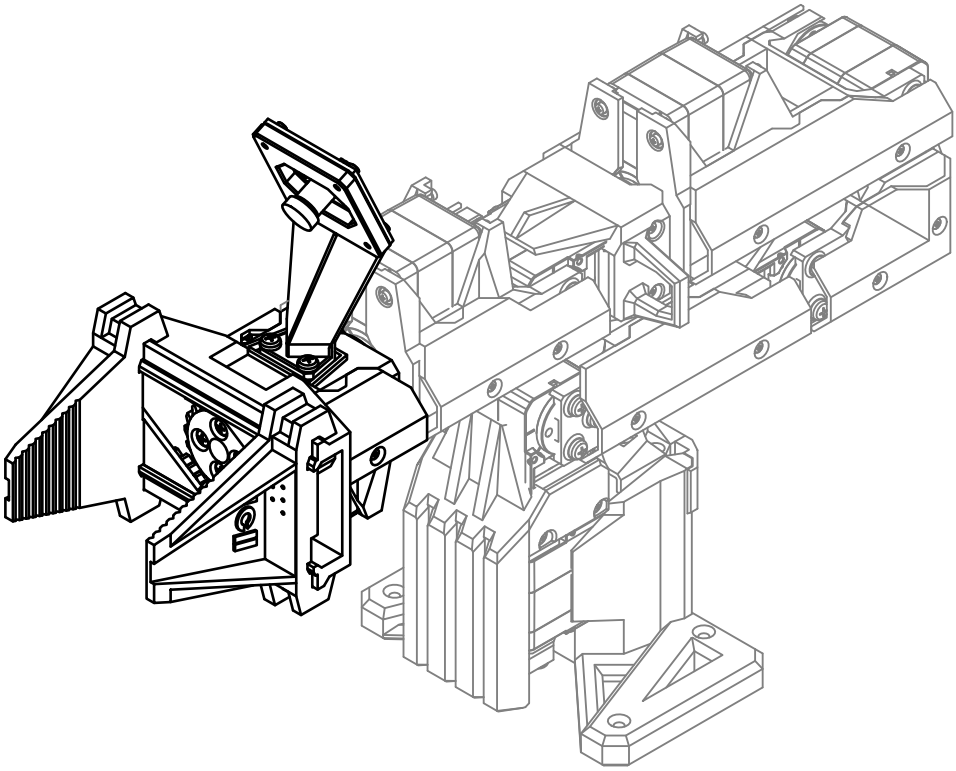

ElRobot

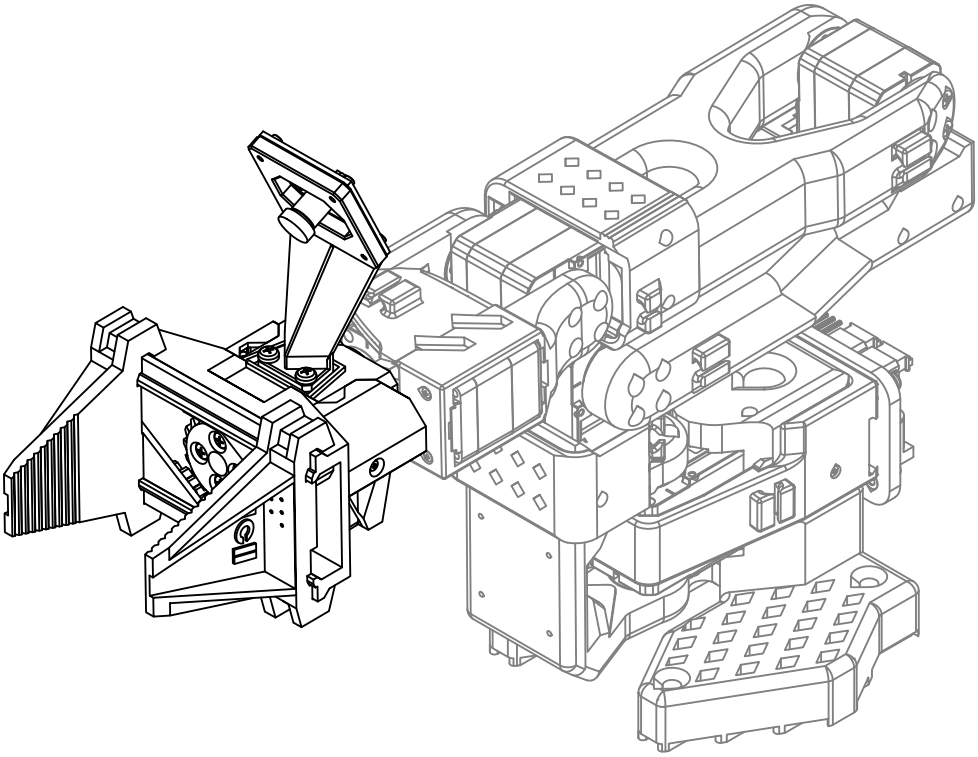

SO-101

Gripper

3D Printing Parts

Gripper Base 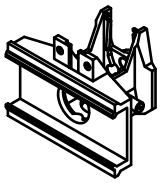 **A** **1x**	Gripper_Gear **B** **1x**	Gripper Jaw 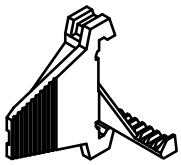 **C** **2x**	Gripper Base Shield 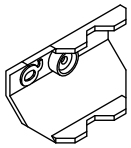 **Q** **2x**
Wiring Bracket 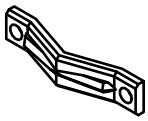 **R** **1x**	Camera Mount **S** **1x**		

Servo Parts

Screw M3x8 **T** **11x**	Self-tapping Screw M2x6 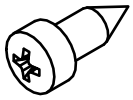 **U** **10x**	Idler Horn 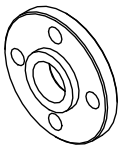 **V** **1x**	Servo Horn 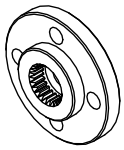 **W** **1x**
Motor wires **X** **1x**	Servo ST3215 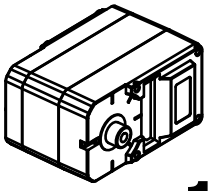 **Y** **1x**		

Other Parts

UVC Camera innomaker U20CAM 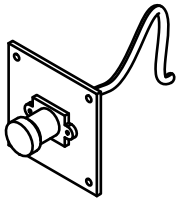 **Z** **1x**	

Gripper

Before assembling the gripper,
the robot must be assembled as shown below.
It is important to securely attach the servo horn to the servo.

(The robot`s servo horn and screw are not included in the gripper BOM)

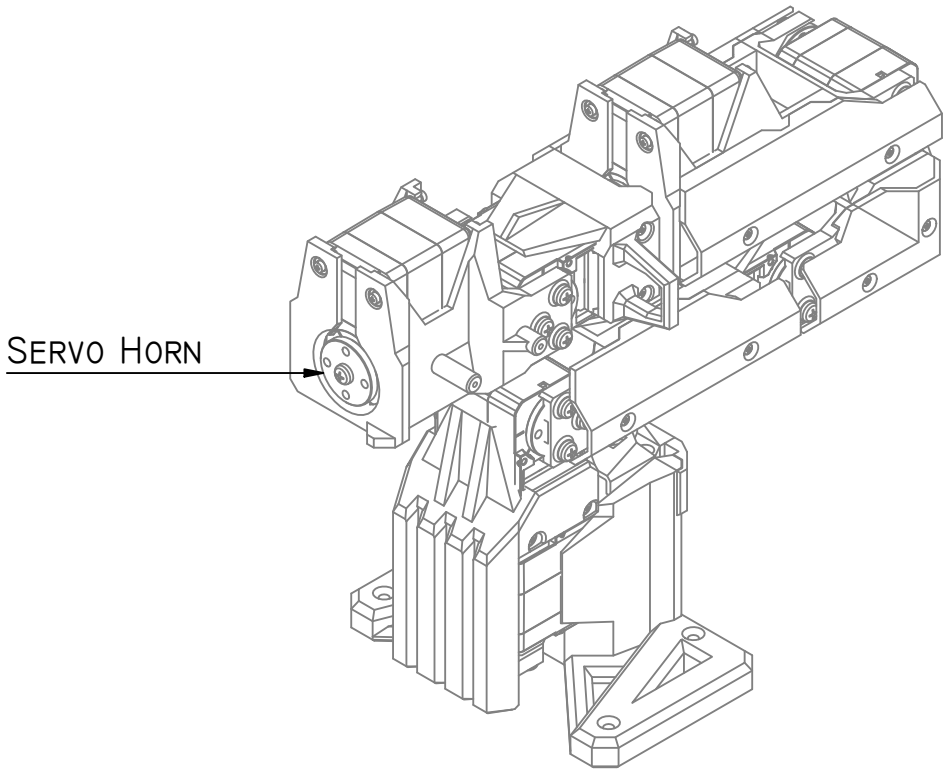

ElRobot

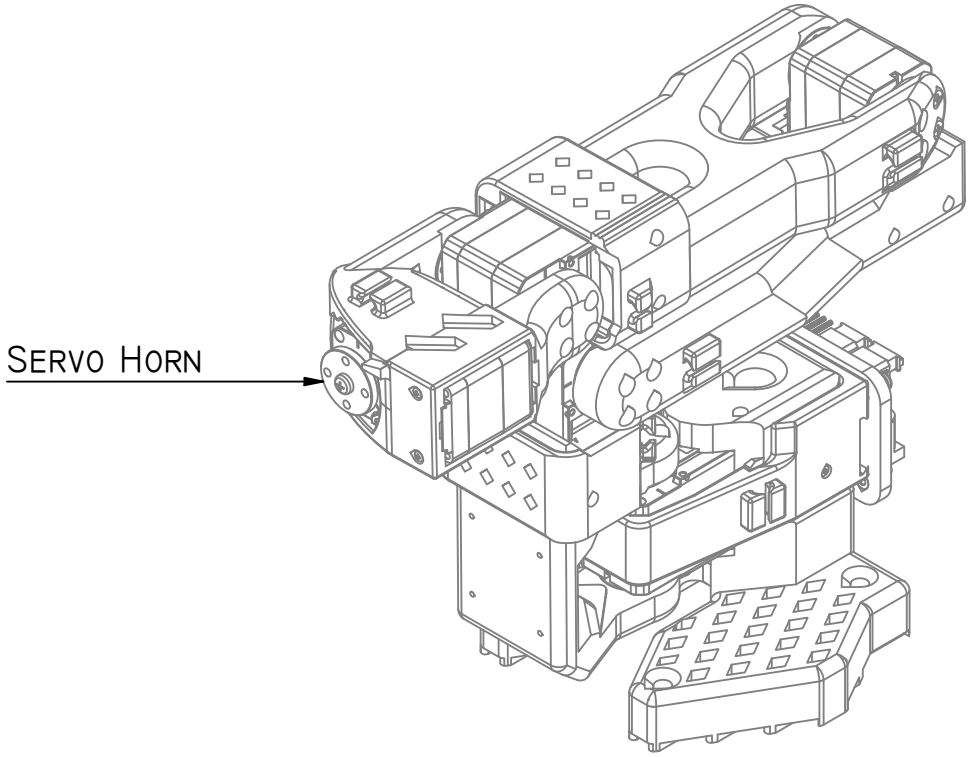

SO-101

Gripper

Step 1

Gripper Base

A 1x

Screw M3x8

T 4x

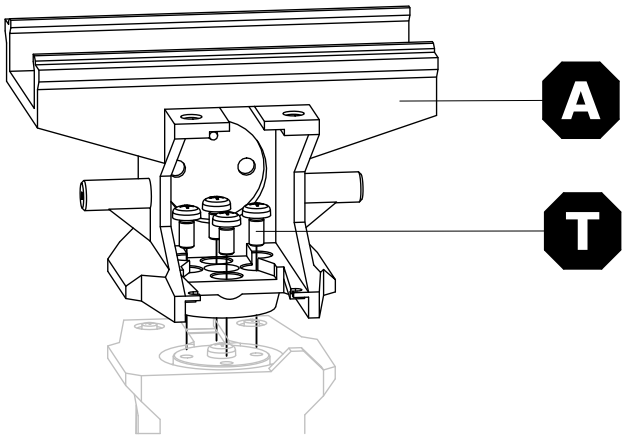

! The gray color shows the already assembled ElRobot/SO-101 structures!

Step 2

Idler Horn

V 1x

! Place the part as shown on the image

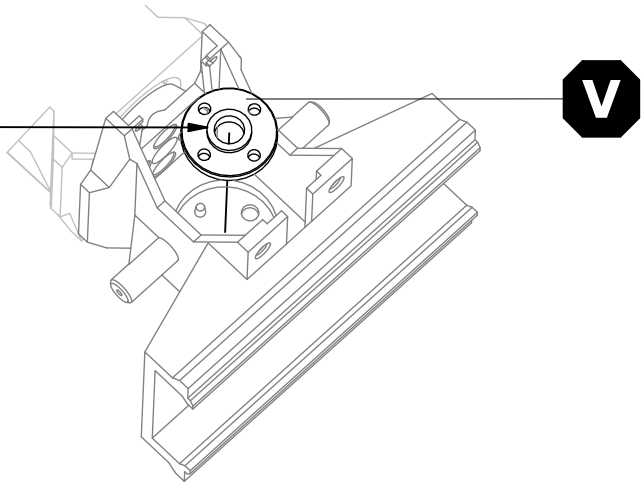

Step 3

Servo ST3215

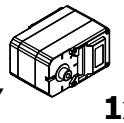

Y 1x

Motor wires

X 1x

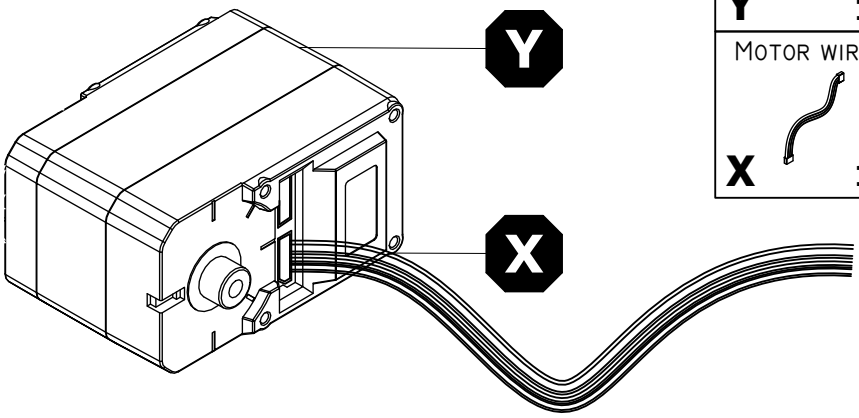

! Connect wires to any slot!

Gripper

Step 4

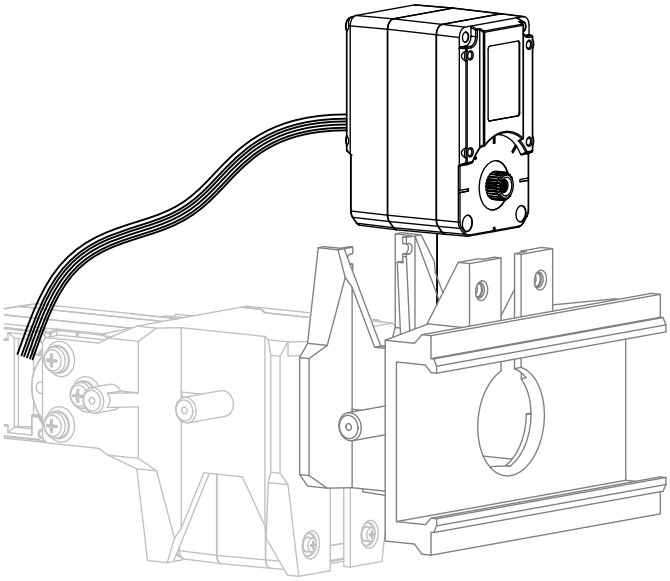

! Gently press the servo into the component footprint. Ensure it is fully seated **!**

Step 5

Self-tapping Screw M2x6

U **2x**

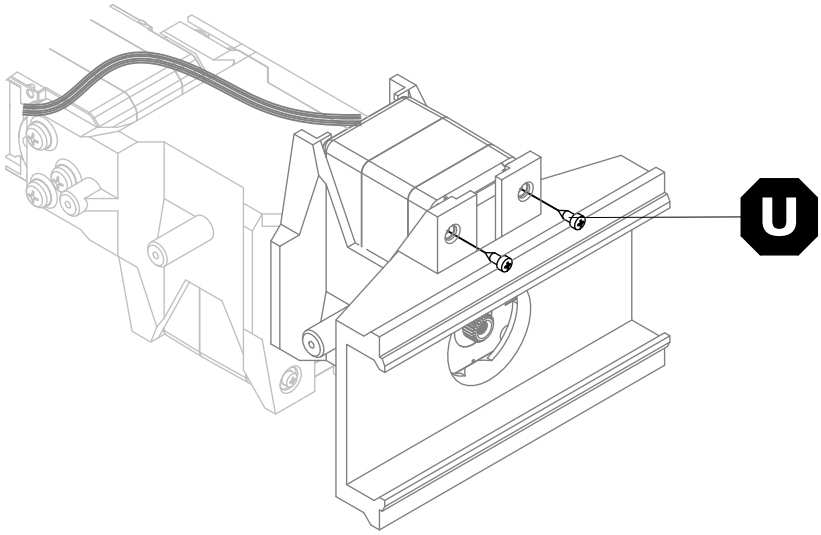

Step 6

Wiring Bracket

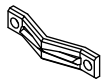

R **1x**

Self-tapping Screw M2x6

U **2x**

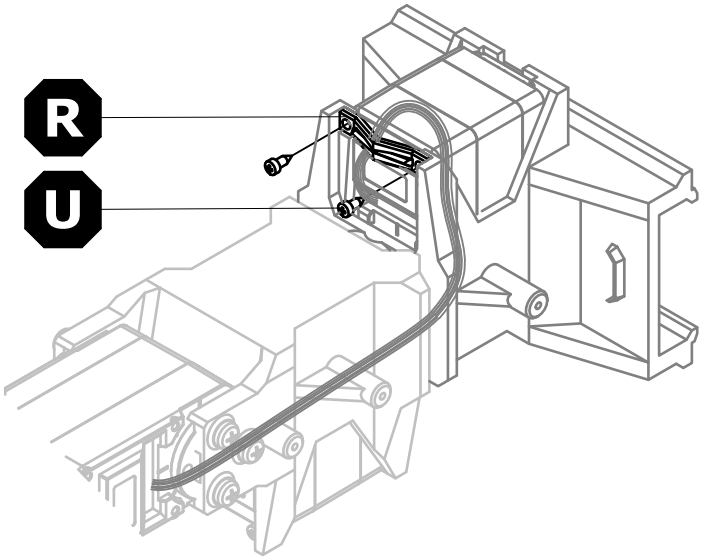

! Use the bracket to secure the wire **!**

Gripper

Step 7

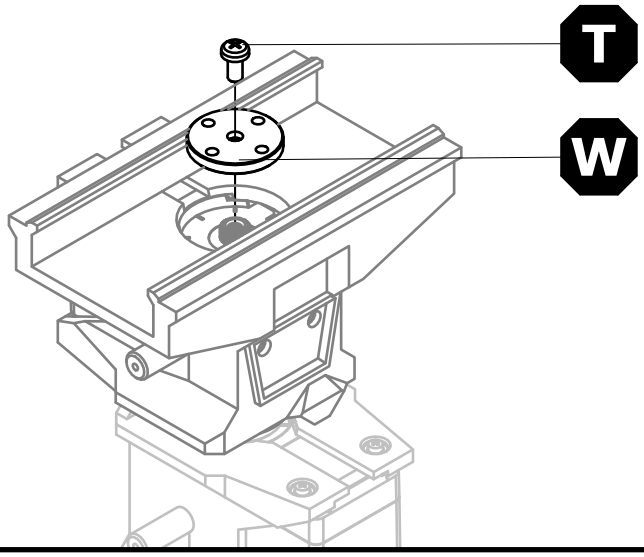

Screw M3x8

T 1x

Servo Horn

W 1x

Step 8

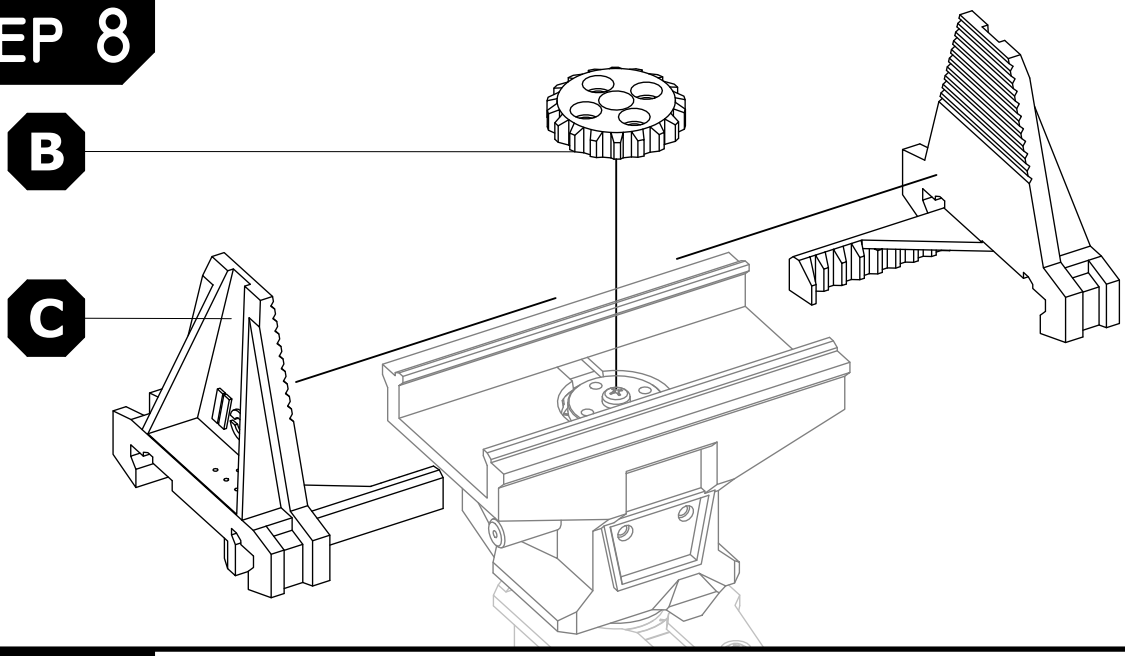

Gripper Gear

B 1x

Gripper Jaw

C 2x

Step 9

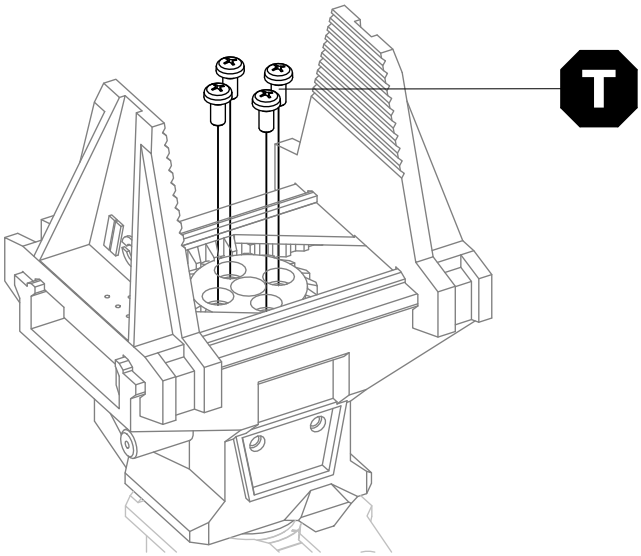

Screw M3x8

T 4x

Gripper

Step 10

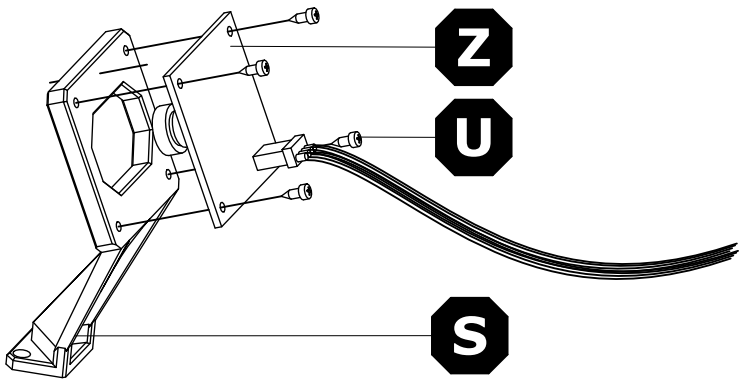

Camera Mount
S 1x

Self-tapping Screw M2x6
U 4x

UVC Camera Innomaker U20CAM
Z 1x

Step 11

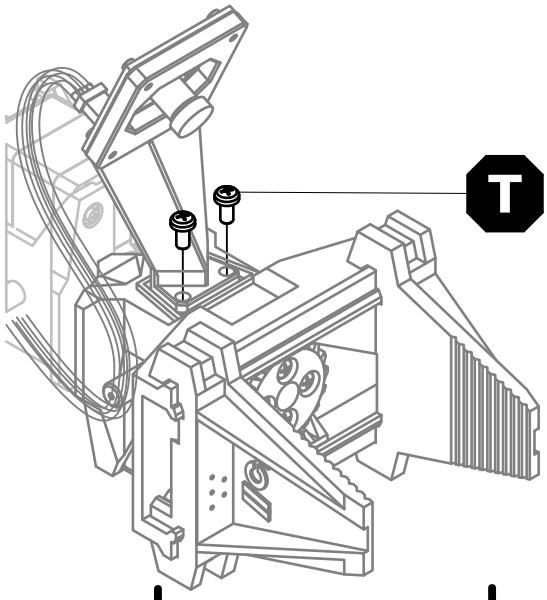

! Connect the Camera !

Screw M3x8
T 2x

Step 12

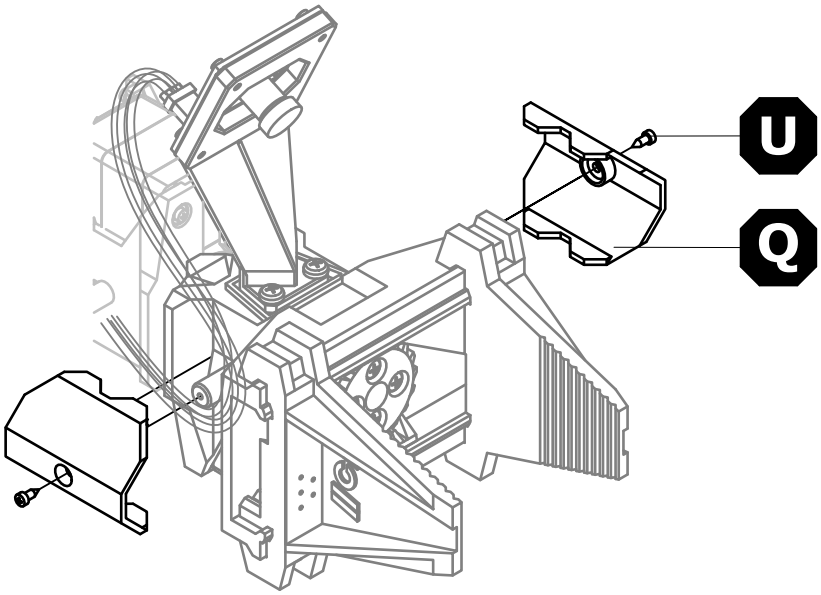

Gripper Base Shield
Q 2x

Self-tapping Screw M2x6
U 2x