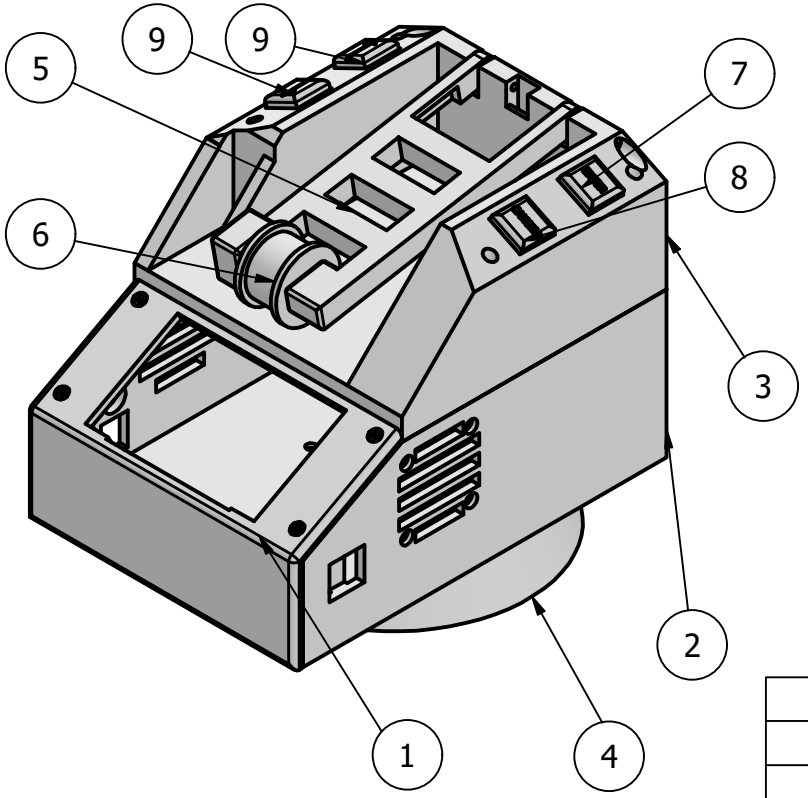

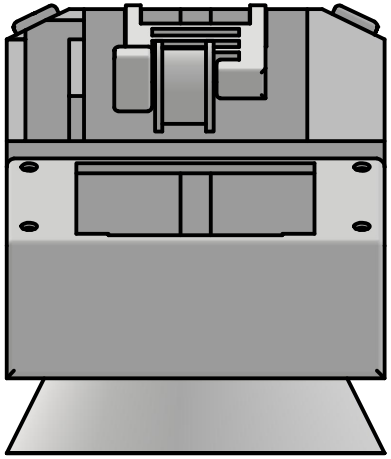

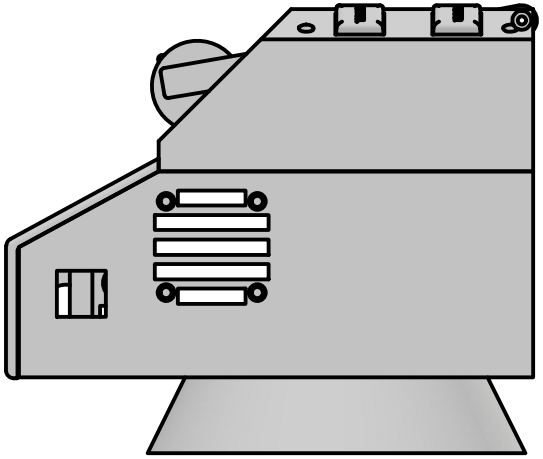

PARTS LIST			
ITEM	QTY	PART NUMBER	DESCRIPTION
1	1	Schermhouder	
2	1	Printplaathouder	
3	1	Deler	
4	1	Voet	
5	1	Motorarm	
6	1	Wieltje	
7	1	Enterknop	
8	1	Cancelknop	
9	2	Pijlknop	

Designed by	Checked by	Approved by	Date		Date	
Jochem & Siebe					13/05/2024	

	Kaartendeler		
	Assembly	Schaal 1/2	Formaat A4