LORA SLAVE:Only TX

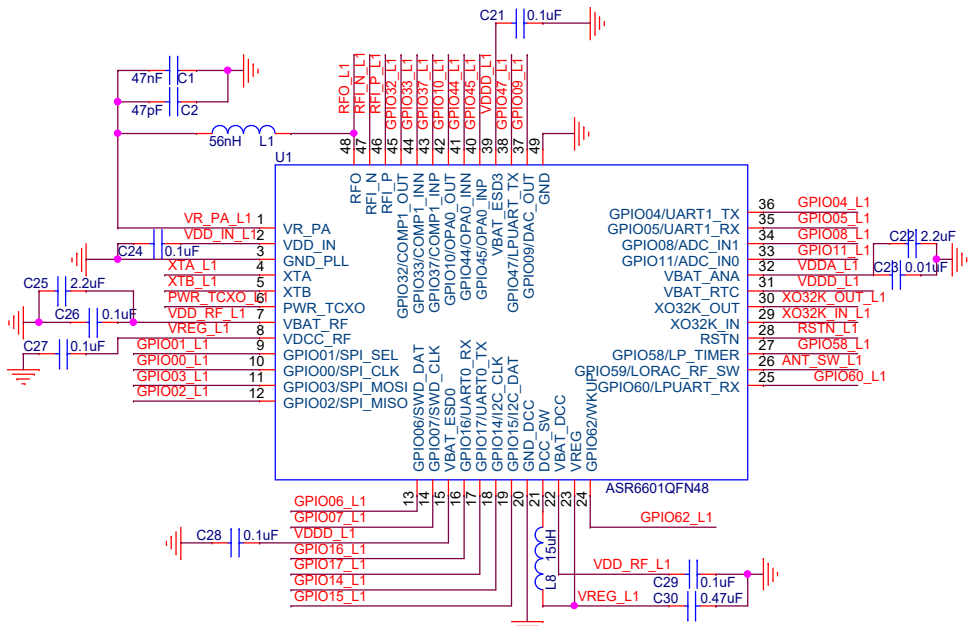

LORA POWER

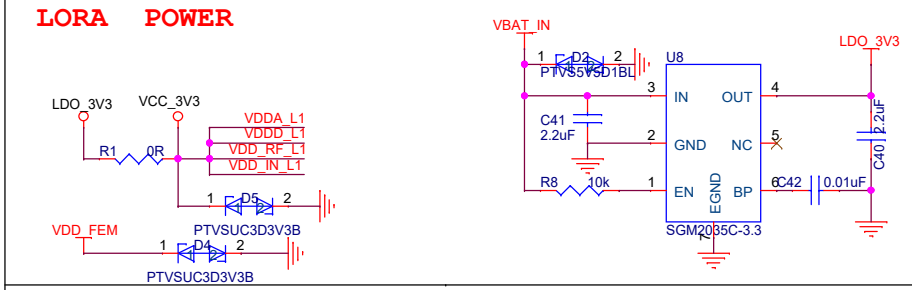

FEM POWER (3.3-5.0 V)

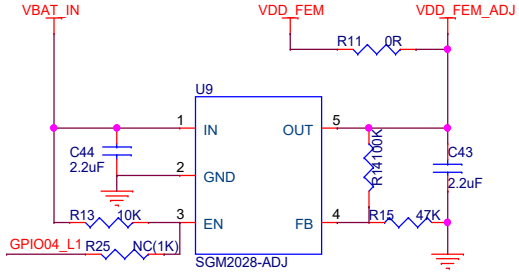

LORA Reset

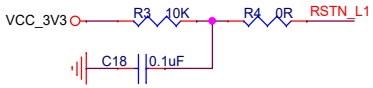

VOUT= 1.206* (1+R14/R15)
R14=100K,R15=47K,则Vout=3.77V

32M TCXO

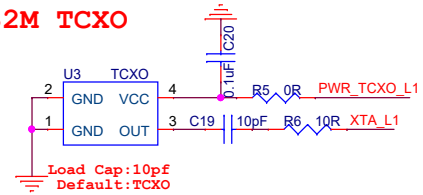

32K XO

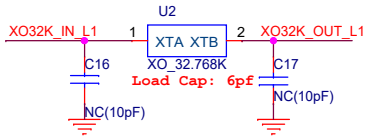

TX Matching

1) ZD1420 FEM 的频率范围为860-930MH在。

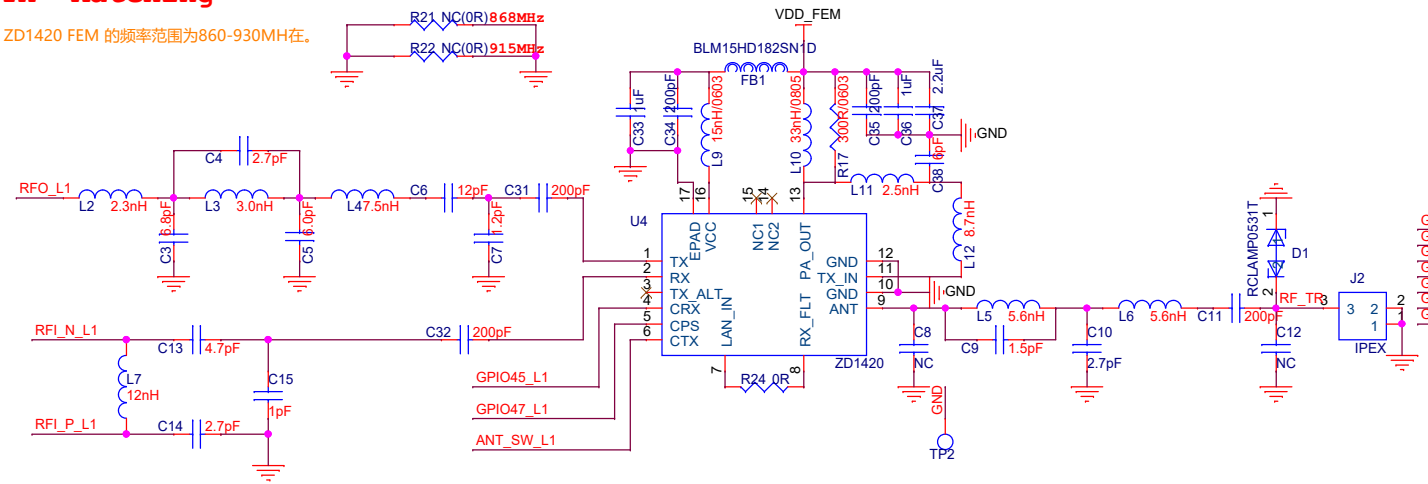

Control Truth table :

	CRX	CTX	CPS
LNA_RX	1	0	0
PA_TX	0	1	0
PA_BP	0	0	1
STDN	0	0	0
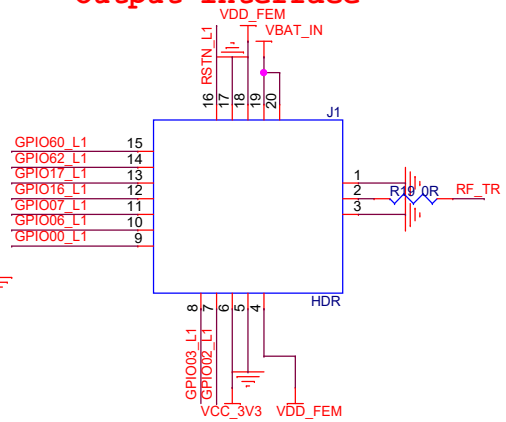
Output interface