Product Introduction

ZDH1420 is a high-performance, highly integrated RF front-end IC that integrates a power amplifier (PA), a low noise amplifier (LNA) and an RF switch (SW). ZDH1420 uses a wide operating voltage of 3V~5V, has fully matched 50ΩTX (or TX_ALT) and RX inputs and antenna outputs, and digital control compatible with 1.6~3.6V CMOS levels. ZDH1420 uses a green lead-free standard QFN3x3-16 package with good reliability, economy and extremely high cost performance.

Typical application scenarios

- LP-WAN devices
- IoT
- Smart meters
- Industrial applications
- Range extenders

Maximum Ratings

Parameter	Value
Storage temperature	-65°C~+150°C
Operating temperature	-55°C~+125°C
PA operating voltage (VCC)	+6V
LNA, switch voltage (VDD)	+6V
TX RF input power	+20dBm
Bypass mode input power	+24dBm
ANT input power	+13dBm

Operating state control logic table

State	CRX	CTX	CPS
LNA mode	1	0	0
Transmit	0	1	0
Transmit Bypass	0	0	1
Shutdown	0	0	0

"1": high level = VCC

"0": low level = 0V

Features

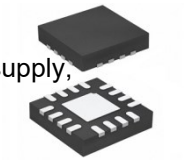

- 3V~5V single voltage power supply, typical operating current 300mA @ 3.3V
- TX small signal gain: 15dB @ 915MHz
- TX saturated output power: 28dBm @ VCC=3.3V
- RX typical P1dB: 24dBm @ VCC=VCTX=3.3V
- Input/output 50Ω impedance matching
- Green lead-free 16-pin QFN3x3 package

This product complies with RoHS regulations.

Pin diagram (Top View)

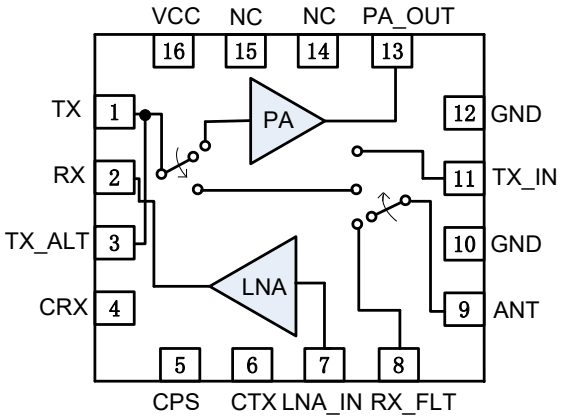

Pin No.	Name	Description
1	TX	RF signal output
2	RX	RX RF signal input
3	TX_ALT	RF signal input (spare pin)
4	CRX	Select receive mode
5	CPS	Select bypass mode
6	CTX	Select transmit mode
7	LNA_IN	LNA input
8	RX_FLT	Connect filter
9	ANT	Antenna signal input
10,12	GND	Ground
11	TX_IN	Antenna signal output
13	PA_OUT	PA output
14,15	NC	Ground or floating
16	VCC	Power supply voltage
17	EPAD	Bottom ground

DC electrical parameters

Test conditions: VCC=+3.3V, Temp= +25°C, Freq=915MHz, 50Ω test system.

Parameter	Conditions	Min	Typ	Max	Units
Icc_TX	P_{OUT}=+27dBm	-	300	-	mA
Icc_RX	No RF	-	8.5	-	mA
Icc_BYP	No RF	-	0.4	-	uA
Icq_TX	No RF	-	64	-	mA
Icc_OFF	No RF	-	0.5	-	uA

TX electrical parameters

Test conditions: VCC=+3.3V, Temp= +25°C, 50Ω test system.

Parameter	Min	Typ	Max	Units	Conditions
Frequency range (f)	860	-	930	MHz	-
Output power (Pout)	-	27	-	dBm	Freq=868MHz
	-	28	-	dBm	Freq=915MHz
Gain	-	16	-	dB	Freq=868MHz
	-	15	-	dB	Freq=915MHz
Gain Flatness	-	±1	-	dB	-
Input Return Loss (S11)	-	-15	-	dB	-
Output Return Loss (S22)	-	-13	-	dB	-
P1dB（Bypass）	-	24	-	dB	Bypass Mode
Harmonics level	-	-36	-	dBm	H2，Pout=+27dBm
	-	-50	-	dBm	H3，Pout=+27dBm
Insertion loss (Bypass)	-	1.2	-	dB	Bypass Mode
Turn-on time (tON)	-	0.5	-	us	-
Turn-off time (tOFF)	-	0.02	-	us	-
Stability	-	-	-42	dBm	P_{IN}=+16dBm，VSWR=6：1
Ruggedness	No damage				P_{OUT}=+27dBm，VSWR=10：1

RX electrical parameters

Test conditions: VCC=+3.3V, Temp= +25°C, 50Ω test system.

Parameter	Min	Typ	Max	Units	Conditions
Frequency range	860	-	930	MHz	-
Gain	-	19	-	dB	-
ANT return loss (S11)	-	-10	-	dB	ANT port
RX return loss (S22)	-	-15	-	dB	RX port
Noise figure (NF)	-	1.4	-	dB	-
IP1dB	-	-15	-	dBm	-
IIP3	-	-6.5	-	dBm	-
Turn on time (tON)	-	0.1	-	us	-
Turn off time (tOFF)	-	0.05	-	us	-

Application Circuit Diagram

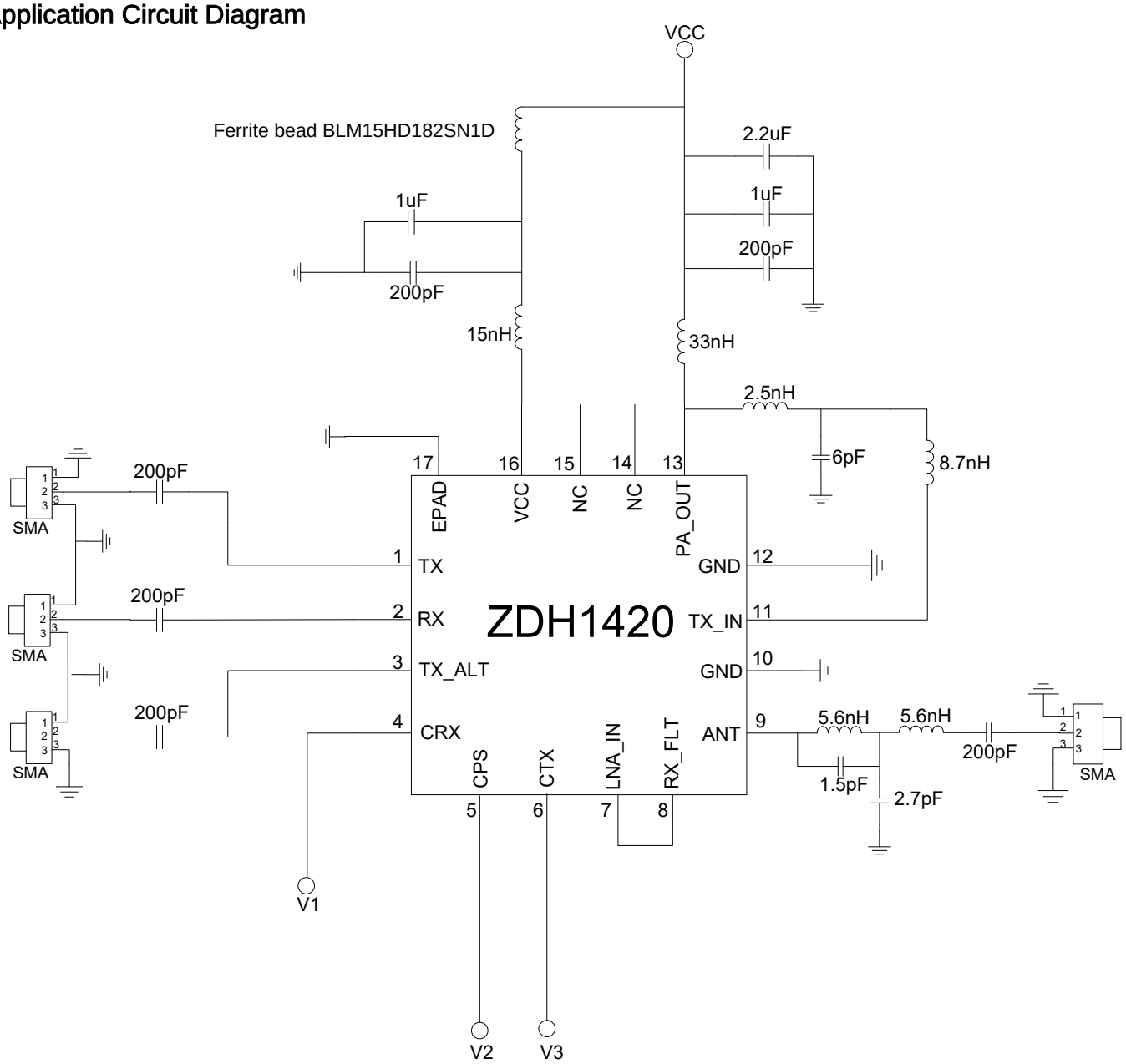

Packaging diagram

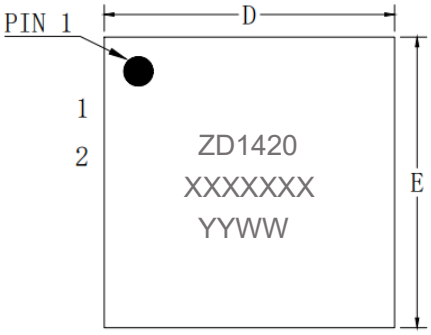

顶视图

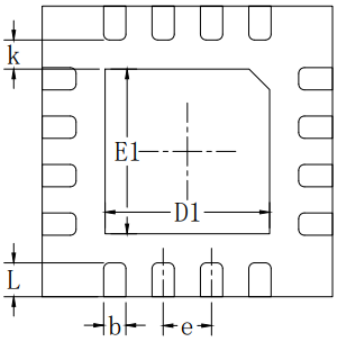

底视图

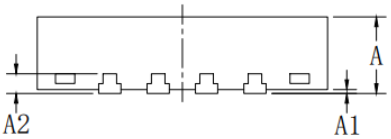

侧视图

符号	尺寸单位：毫米		
	最小值	标准值	最大值
A	0.700	0.750	0.800
A1	0.000	--	0.050
A2	0.195	0.203	0.211
D	2.950	3.000	3.050
E	2.950	3.000	3.050
D1	1.600	1.700	1.800
E1	1.600	1.700	1.800
k	0.300 Min.		
b	0.180	0.230	0.280
e	0.500 Typ.		
L	0.300	0.350	0.400

Ordering Information

Part NO	Marking	Package
ZDH1420	ZD1420	QFN3X3-16