Product Introduction

ZDH1033 is a two-stage HBT high-power amplifier suitable for indoor/outdoor wireless applications such as RFID and LoRa. It operates at a frequency of 300MHz to 1200MHz, integrates internal temperature compensation circuitry, and has input and output impedance matched to 50Ω, resulting in a simple external circuit.

ZDH1033 uses a standard green lead-free QFN3x3 16-pin package, offering low cost and high reliability.

Features

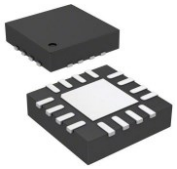

- 3-5.5V single supply voltage, 300mA current
- Typical gain: 33dB @ 920MHz
- Typical P1dB: 32dBm @ 920MHz
- Typical P3dB: 33dBm @ 920MHz
- PAE 50%
- Input/output 50Ω impedance matching
- Green lead-free 16-pin QFN3x3 package

This product complies with all relevant regulations and is halogen-free.

Typical application scenarios

- Wireless Systems
- Power Amplifier Modules
- Customer Premises Equipment (CPE)
- Automatic Meter Readers
- RFID Readers

Absolute Maximum Ratings

Parameter	Value
Storage Temperature	-55°C~+125°C
Operating Temperature	-55°C~+105°C
Junction Temperature	175°C
Supply Voltage (Vcc)	+5.5V
Input Power (RFIN)	+10dBm

Pin diagram (Top View)

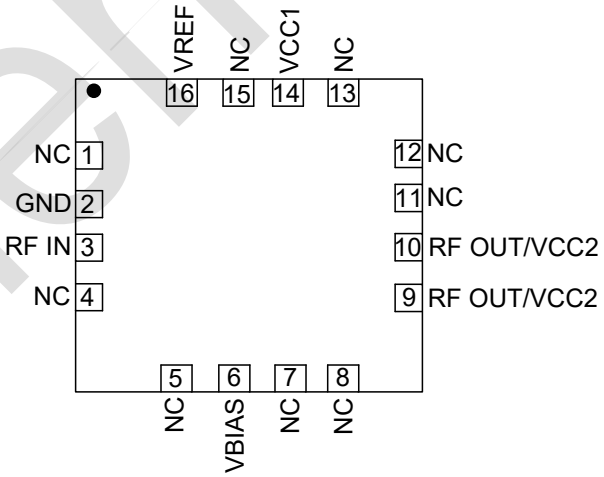

PIN No.	Pin Name	Description
1,4,5,7,8, 11-13,15	NC	Empty, floating, or grounded
2	GND	Ground
3	RFIN	RF input
6	Vbias	Bias voltage
9,10	RFOUT /VCC2	RF output / power supply voltage 2
14	VCC1	Power supply voltage 1
16	Vref	Reference voltage
17	EPAD	Ground

Confidential

Recommended operating conditions

Parameter	Minimum	Typical	Maximum	Unit
Operating voltage (VCC1, VCC2, VCC3, Vbias)	-	5	5.5	V
Enable control voltage (VEN)	-	3	-	V
Enable control current (IEN)	-	8	15	mA

Electrical parameters

Test conditions: VCC1=VCC2=Vbias=5V, Vref=3V, Freq=920MHz, Temp= +25°C, 50Ω test system.

Parameter	Condition	Minimum	Typical	Maximum	Unit
Gain	20dBm	-	33	-	dB
Input Return Loss (S11)	-	-	-10	-	dB
P1dB	-	-	32	-	dB
P3dB	-	-	33	-	dBm
Power Added Efficiency (PAE)	Psat	-	50	-	%
Quiescent Current (Icq)	-	-	300	350	mA
ACPR @ 20dBm	20MHz LTE E-TM1.1,9.5dB PAR	-	-46	-	dBm

Confidential

Application circuit

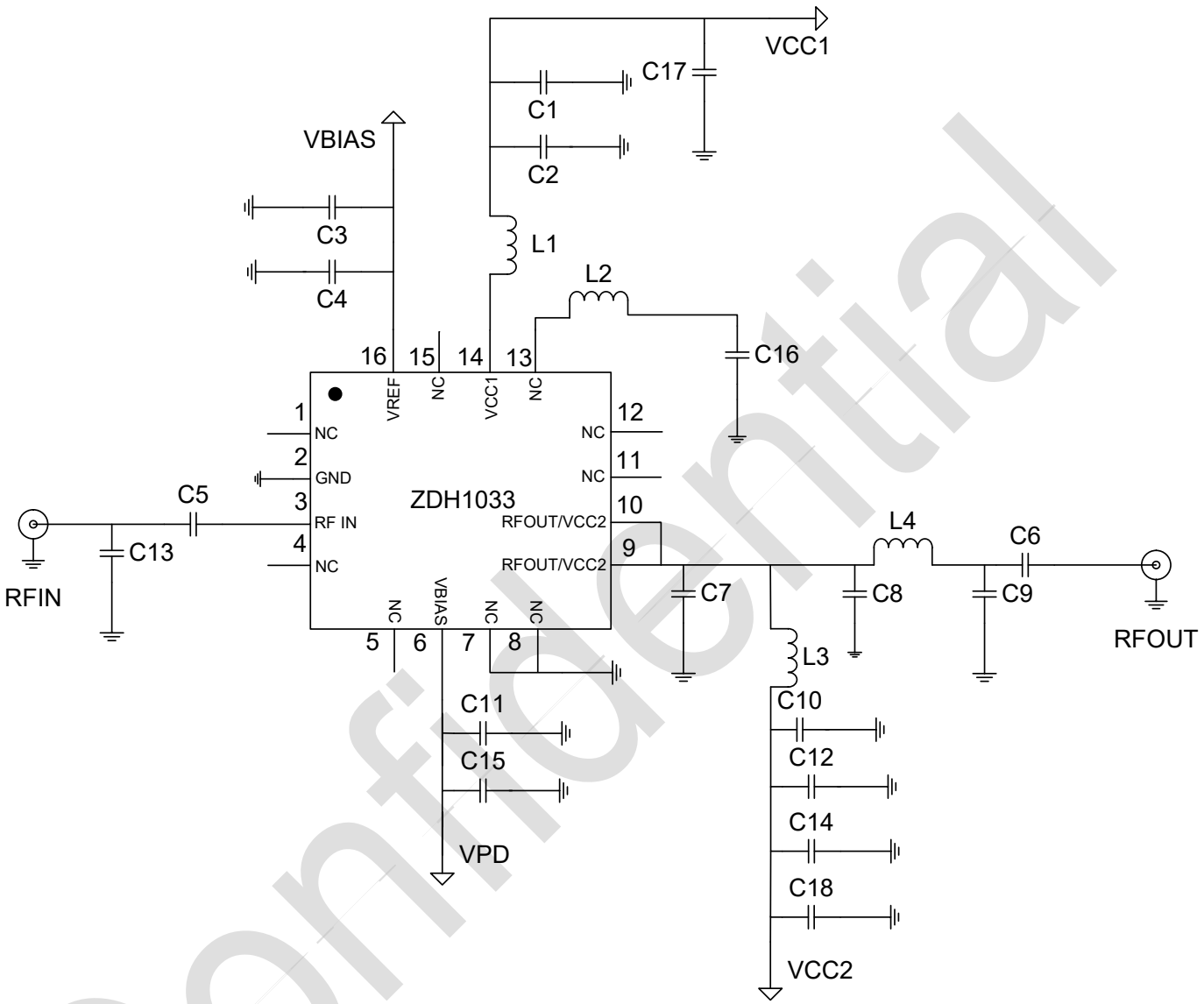

Confidential

Evaluation board Bill of Materials (BOM) – 400MHz~470MHz, 5V

Designator	Description	Footprint
C1, C4, C10, C11	1000pF 25V ±10% X7R	C0402
C2, C12	100pF 25V ±10% X7R	C0402
C5, C6	100pF 25V ±10% X7R	C0402
C7	22pF 25V ±10% X7R, Close to output Pin	C0402
C8	8pF 25V ±10% X7R	C0402
C17, C18	4.7uF 16V ±10% X7R	C1206
R1	0R ±5% 1/16W	R0402
L1	3.5nH	L0402
L3	10nH	L0603
L4	6.4nH Sunlord MWSD1005C2N4CTM81	L0402

Evaluation board Bill of Materials (BOM) – 860MHz~925MHz, 3.6V

Designator	Description	Footprint
C1, C4, C10, C11	1000pF 25V ±10% X7R	C0402
C2, C12	100pF 25V ±10% X7R	C0402
C5, C6	47pF 25V ±10% X7R	C0402
C7	10pF 25V ±10% X7R	C0402
C8	4.3pF 25V ±10% X7R	C0402
C17, C18	4.7uF 16V ±10% X7R	C1206
R1	0R ±5% 1/16W	R0402
L1	3.5nH	L0402
L3	10nH	L0603
L4	1.7nH	L0402

Evaluation board Bill of Materials (BOM) – 860MHz~925MHz, 5V

Designator	Description	Footprint
C1, C4, C10, C11	1000pF 25V ±10% X7R	C0402
C2, C12	100pF 25V ±10% X7R	C0402
C5, C6	47pF 25V ±10% X7R	C0402
C7	10pF 25V ±10% X7R	C0402
C8	4.7pF 25V ±10% X7R	C0402
C17, C18	4.7uF 16V ±10% X7R	C1206
R1	0R ±5% 1/16W	R0402
L1	3.5nH	L0402
L3	10nH	L0603
L4	2.4nH	L0402

Confidential

Package size diagram

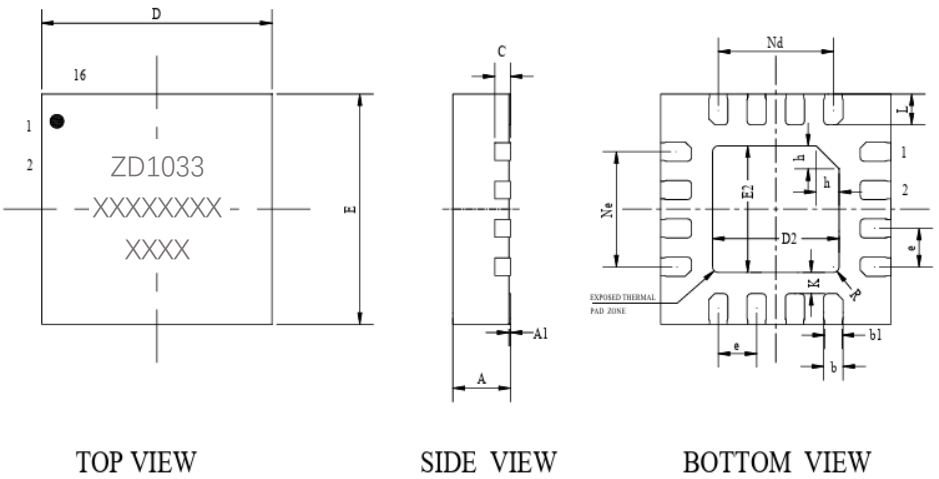

SYMBOL	MILLIMETER		
	MIN	NOM	MAX
A	0.7	0.75	0.80
A1	0	0.02	0.05
b	0.2	0.25	0.3
b1	0.23REF		
c	0.203REF		
D	2.90	3.00	3.10
D2	1.6	1.65	1.70
e	0.50BSC		
Ne	1.50BSC		
Nd	1.50BSC		
E	2.90	3.00	3.10
E2	1.60	1.65	1.70
L	0.35	0.4	0.45
h	0.25	0.3	0.35
K	0.225	0.275	0.325
R	0.075REF		

Ordering Information

Model	Marking	Packaging
ZDH1033	ZD1033	QFN3x3-16

Confidential