Product Introduction

The ZDH7004 is a single-stage HBT high-power broadband amplifier suitable for indoor/outdoor wireless applications such as base stations and radio systems. It operates from 100MHz to 4GHz, with internal input and output impedance matched to 50Ω, integrated temperature compensation circuitry, and a simple external application circuit.

The ZDH7004 uses a standard green lead-free QFN4x4 24-pin package, featuring low cost and high reliability.

Typical application scenarios

- Wireless Systems
- Power Amplifier Modules
- Customer Premises Equipment (CPE)
- Automatic Meter Readers
- RFID Readers

Absolute Maximum Ratings

Parameter	Value
Storage temperature	-55°C~+125°C
Operating temperature	-40°C~+105°C
Junction temperature	175°C
Supply voltage (V_{CC})	+5.5V
RF input power (RFIN)	+10dBm

Features

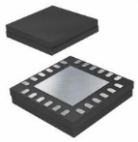

- 3-5.5V single supply voltage, 260mA current
- Typical gain: 15dB @ 2140MHz
- Typical P1dB: 33dBm @ 2140MHz
- Typical P3dB: 35dBm @ 2140MHz
- PAE 50% @ Pout=33dBm
- Input/output 50Ω impedance matching
- Green lead-free 24-pin QFN4x4 package

This product complies with all relevant regulations and is halogen-free.

Pin diagram (Top View)

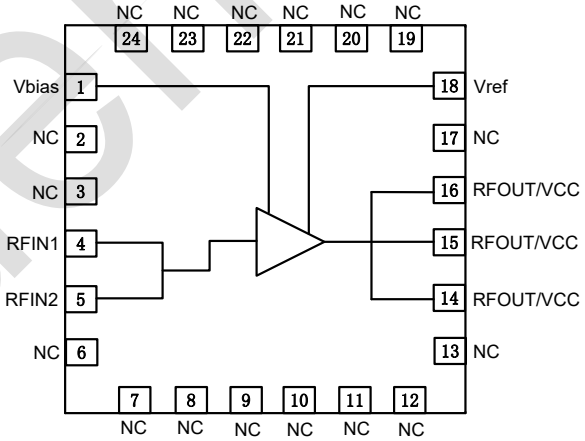

PIN No.	Pin name	Description
1	Vbias	Bias Voltage
2,3,6-13, 17.19-24	NC	Empty, floating or grounded
4	RFIN1	RF Input 1
5	RFIN2	RF Input 2
14-16	RFOUT /VCC	RF Output / Supply Voltage
18	Vref	Reference Voltage
17	EPAD	GND

Confidential

Electrical parameters

Test conditions: VCC=Vbias=5V, Vref=3.2V, Temp= +25°C, 50Ω test system.

Parameter	Value					Unit
Frequency	137	1400	1845	2140	2350	MHz
Small-signal gain	23	15	15	17	15.5	dB
Input return loss (S11)	-14	-16	-25	-22	-14	dB
P1dB	33	33	33	33.5	34	dBm
P3dB	34	34	34	35	35	dBm
Quiescent current (Icq)	-	-	-	260	-	mA
ACPR@24dBm,20M LTE	-60dBc IMD @2tone/20dBm	-47	-46	-48	-48	dBc

Test conditions: VCC=Vbias=5V, Vref=3.2V, 1.3GHz-1.8GHz application circuit, Temp= +25°C, 50Ω test system.

Parameter	Value						Unit
Frequency	1300	1400	1500	1600	1700	1800	MHz
Small-signal gain	16.1	16.1	15.8	15.8	16	15.3	dB
Input return loss (S11)	-11	-18	-20	-16	-15	-13	dB
P1dB	35	35	34.5	33.5	33.5	35	dBm
P3dB	36	36	35	34.5	34.5	36	dBm
ACPR@24dBm,20M LTE	-45	-45	-45	-45	-45	-45	dBc

Application circuit

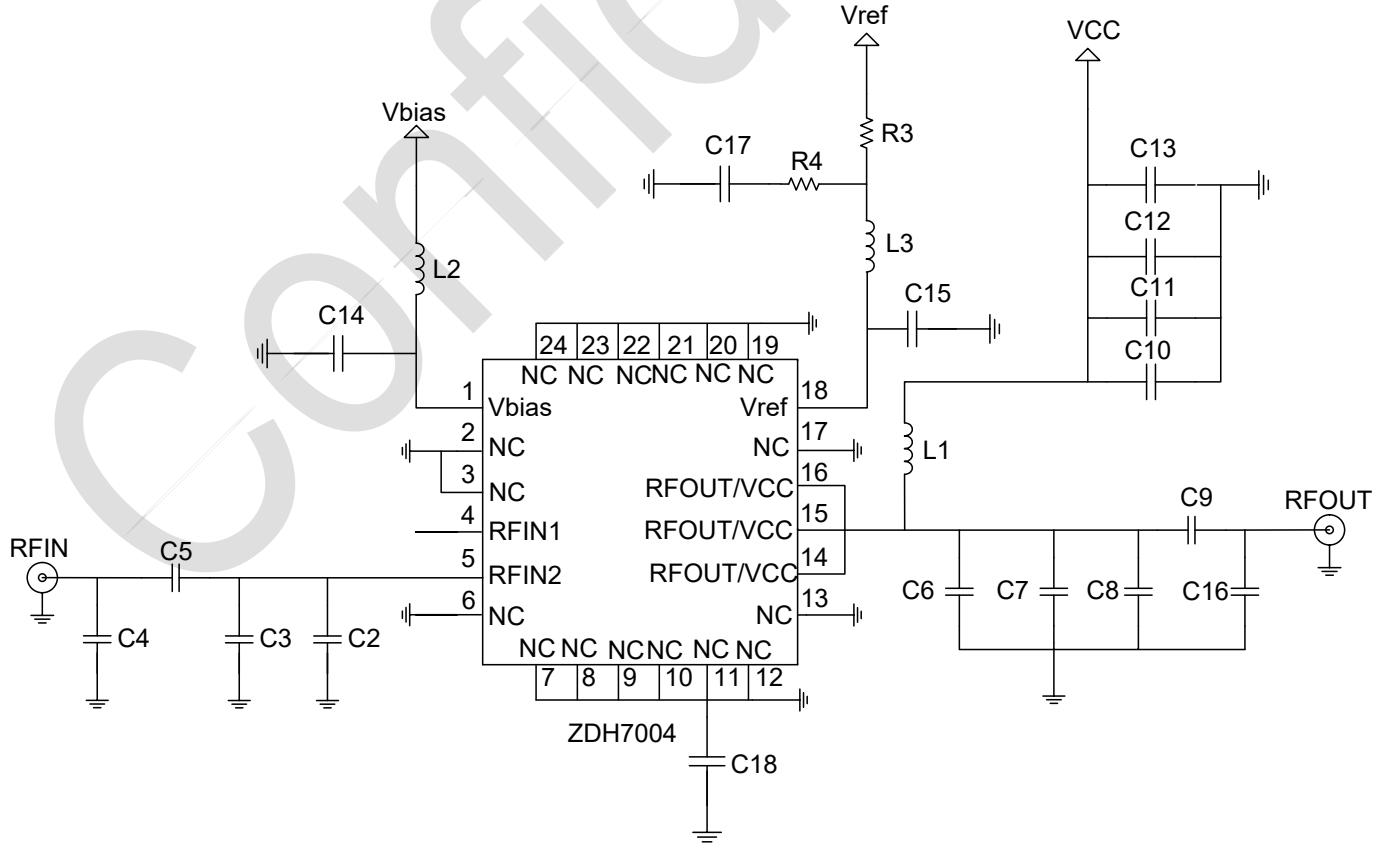

Confidential

Evaluation Board Bill of Materials (BOM) – 1300MHz~1800MHz

Designator	Description	Footprint
C2	7.5pF 25V ±0.1pF X7R	C0603
C5	22pF 25V ±0.1pF X7R	C0603
C4	2.4pF 25V ±0.1pF X7R (distance to C2 14mm)	C0603
C8	10pF 25V ±0.1pF X7R	C0603
C7	3.6pF 25V ±0.1pF X7R (distance to C8 6.3mm)	C0603
C9, C10	22pF 25V ±2% X7R	C0603
C11	10nF 25V ±10% X7R	C0603
C13	10uF 25V ±10% X7R	C1210
C14, C15	1uF 25V ±10% X7R	C0603
L1	24nH, Sunlord SDWL1608CP24NNHSTF	L0603
L3	36R ±5% 1/16W	R0603
R3, L2	0R ±5% 1/16W	R0603

Evaluation Board Bill of Materials (BOM) – 1805MHz~1880MHz

Designator	Description	Footprint
C2	6.2pF 25V ±0.1pF X7R	C0603
C5	22pF 25V ±0.1pF X7R	C0603
C4	3pF 25V ±0.1pF X7R (distance to C2 15mm)	C0603
C8	8.2pF 25V ±0.1pF X7R	C0603
C7	3.9pF 25V ±0.1pF X7R (distance to C8 6mm)	C0603
C9, C10	22pF 25V ±2% X7R	C0603
C11	10nF 25V ±10% X7R	C0603
C13	10uF 25V ±10% X7R	C1210
C14, C15	1uF 25V ±10% X7R	C0603
L1	24nH, Sunlord SDWL1608CP24NNHSTF	L0603
L3	36R ±5% 1/16W	R0603
R3, L2	0R ±5% 1/16W	R0603

Confidential

Evaluation board Bill of Materials (BOM) – 2110MHz~2170MHz

Designator	Description	Footprint
C2	2.4pF 25V ±0.1pF X7R	C0603
C5	1.3pF 25V ±0.1pF X7R	C0603
C4	2.2pF 25V ±0.1pF X7R	C0603
C8	15pF 25V ±2% X7R	C0603
C7	10nF 25V ±10% X7R	C0603
C9, C10	10uF 25V ±10% X7R	C1210
C11	1uF 25V ±10% X7R	C0603
C13	24nH, Sunlord SDWL1608CP24NNHSTF	L0603
C14, C15	36R ±5% 1/16W	R0603
L1	0R ±5% 1/16W	R0603
L3	2.4pF 25V ±0.1pF X7R	C0603
R3, L2	1.3pF 25V ±0.1pF X7R	C0603

Evaluation board Bill of Materials (BOM) – 2300MHz~2400MHz

Designator	Description	Footprint
C2	1.5pF 25V ±0.1pF X7R	C0603
C5	1pF 25V ±0.1pF X7R	C0603
C4	3pF 25V ±0.1pF X7R	C0603
C8	1.8pF 25V ±0.1pF X7R(distance to C8 3.5mm)	C0603
C7	15pF 25V ±2% X7R	C0603
C9, C10	10nF 25V ±10% X7R	C0603
C11	10uF 25V ±10% X7R	C1210
C13	1uF 25V ±10% X7R	C0603
C14, C15	24nH, Sunlord SDWL1608CP24NNHSTF	L0603
L1	36R ±5% 1/16W	R0603
L3	0R ±5% 1/16W	R0603
R3, L2	1.5pF 25V ±0.1pF X7R	C0603

Evaluation Board Test Procedure:

Power-on Sequence:

1. Connect the evaluation board's input/output ports to the test equipment, then connect the DC ground wire;
2. Turn on VCC1 and VBIAS sequentially to 5V, then turn on VREF and adjust it to 5V;
3. Apply the RF signal to the input ports.

Power-off Sequence:

1. Turn off the RF signal;
2. Turn off VREF, VBIAS, and VCC sequentially.

Confidential

Package diagram

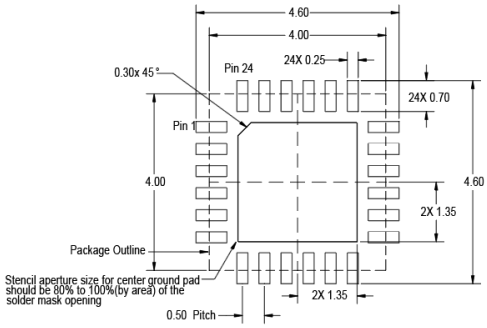

Stencil Aperture Top View

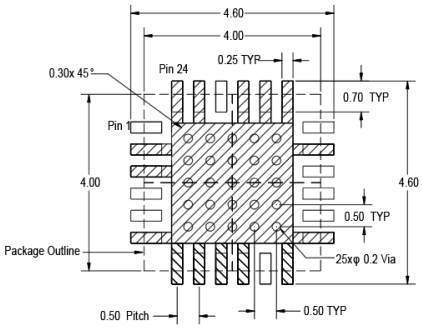

Metallization Top View

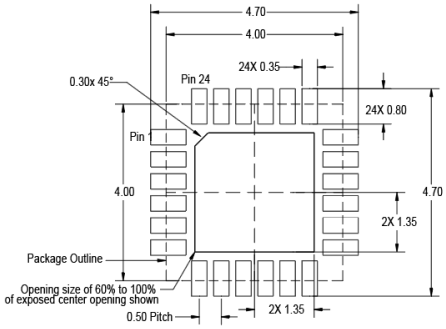

Solder Mask Opening Top view

PCB Layout Footprint

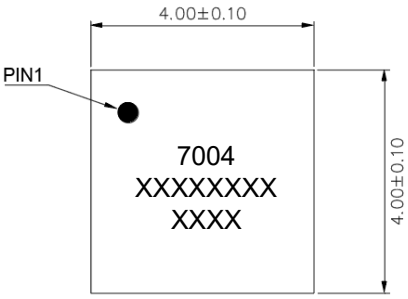

TOP VIEW

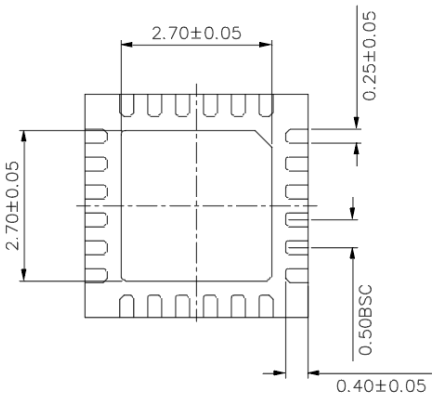

BOTTOM VIEW

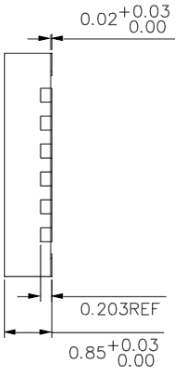

SIDE VIEW

Package Dimensions

Ordering Information

Model	Marking	Packaging
ZDH7004	ZD7004	QFN4x4-24

Confidential