Product Introduction

The ZDH7016 is a two-stage HBT high-power amplifier operating at 1GHz~2GHz, with a peak CW output power of 40dBm and a power gain of 33dB. The chip's internal input and output impedances are matched to 50Ω, and it integrates temperature compensation circuitry.

The ZDH7016 uses a standard QFN5x5 16-pin package, featuring low cost and high reliability.

Typical application scenarios

- Wireless Systems
- Power Amplifier Modules
- Customer Premises Equipment (CPE)
- Automatic Meter Readers

Absolute Maximum Ratings

Parameter		Value
Storage temperature		-55°C~+125°C
Operating temperature		-55°C~+125°C
Junction temperature		+175°C
Supply voltage	VCC1,VCC3	3.3V
	VCC2	12V
RF input power (RFIN)		+15dBm

Features

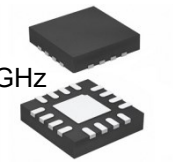

- Application Frequency: 1GHz~2GHz
- Typical Gain: 33dB @ 1500MHz
- PAE=65% @ Pout=39.5dBm, VCC2=9V
- Peak Power Psat=40dBm
- Input/Output 50Ω Impedance Matching
- Green Lead-Free 16-Pin QFN5x5 Package

This product complies with all relevant regulations and is halogen-free.

Pin diagram (Top View)

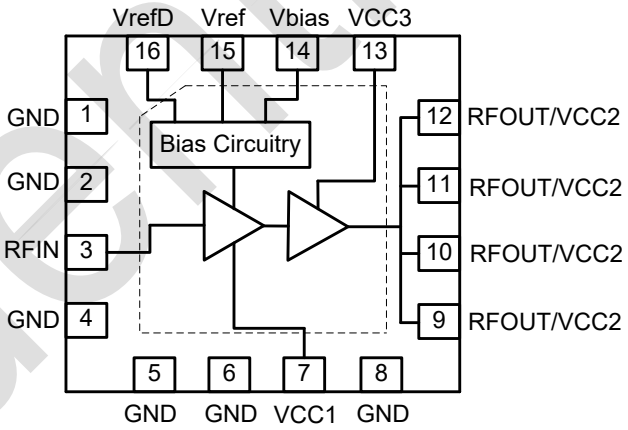

PIN No.	Pin name	Description
1,2,4-6,8	GND	Ground
3	RFIN	Radio Frequency Input
7	VCC1	First-stage power supply voltage
9-12	RFOUT/ VCC2	RF Output/Second Stage Supply Voltage
13	VCC3	Third Stage Supply Voltage
14	Vbias	Bias Voltage
15	Vref	Final Stage Reference Voltage
16	VrefD	Driver Stage Reference Voltage
17	EPAD	Bottom Ground

Confidential

Recommended operating conditions

Parameter		Minimum	Typical	Maximum	Unit
Operating voltage	VCC1,VCC3	-	3.3	-	V
	VCC2	6	-	12	V
Drive stage reference voltage (VrefD)		2.4	2.7	-	V
Final stage reference voltage (Vref)		-	3	-	V
Reference current (IrefD, Iref)		-	10	15	mA

Electrical parameters

Test conditions: VCC1=VCC3=3.3V, VCC2=12V, Vref=3V, VrefD=2.7V, Temp= +25°C, 50Ω test system.

Parameter	Minimum	Typical	Maximum	Unit	Condition
Frequency	1000	1500	2000	MHz	
Gain	-	33	-	dB	Pout=37dBm
Input return loss (S11)	-	-10	-	dB	
Output P3dB	-	40	-	dBm	Pulse & CW
PAE	-	52	-	%	Pout=40dBm，CW
Quiescent current	-	50	-	mA	Driver stage, 3.3V
	-	90	-	mA	Final stage, 12V

Confidential

Application circuit (1GHz~2GHz)

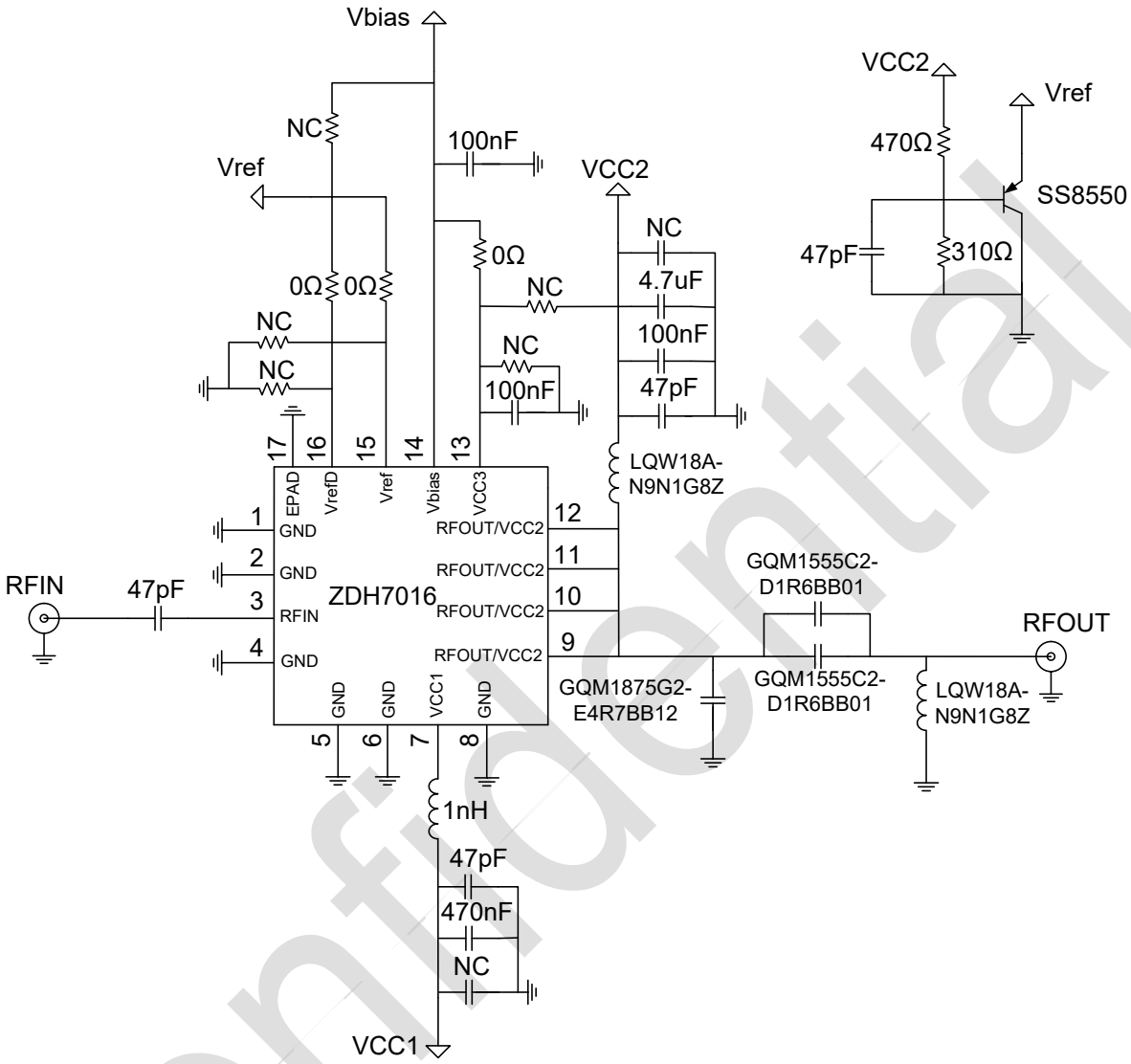

Evaluation Board Test Procedure:

Power-on Sequence:

1. Connect the evaluation board's input/output ports to the test equipment, then connect the DC ground wire;
2. Turn on VCC1, VCC2, and Vbias sequentially to 5V, then turn on Vref;
3. Apply the RF signal to the input ports.

Power-off Sequence:

1. Turn off the RF signal;
2. Turn off Vref, Vbias, VCC1, and VCC2 sequentially.

Confidential

Package diagram

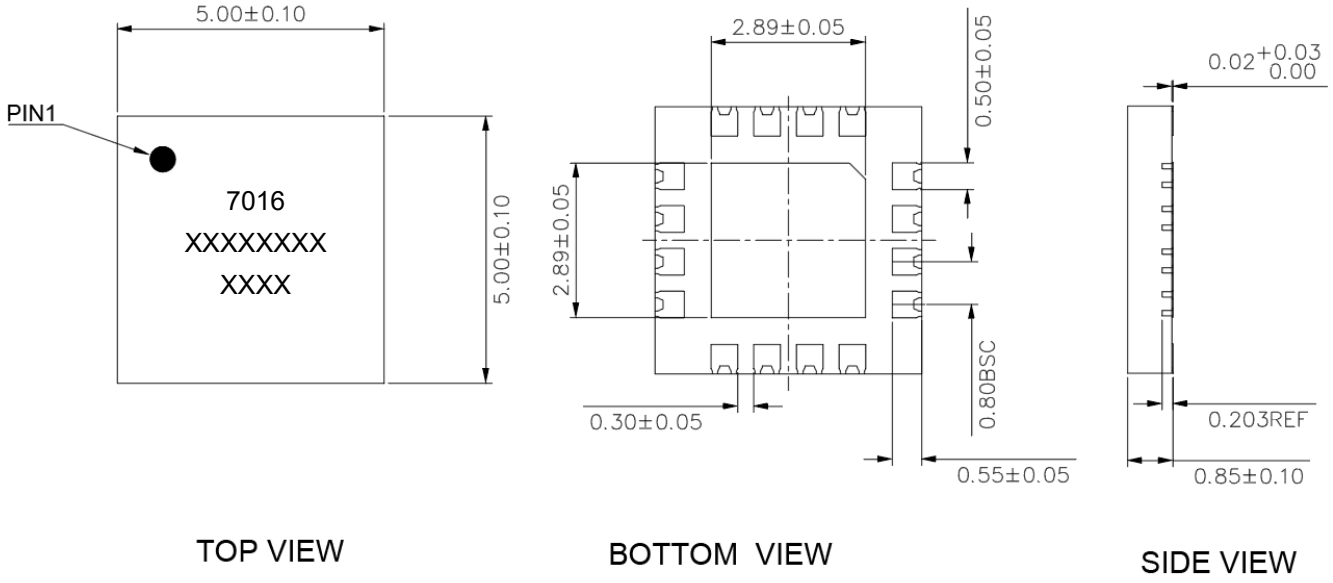

Ordering Information

Model	Marking	Packaging
ZDH7016	ZD7016	QFN5x5-16

Confidential