RF SWITCH

CG2179M2

L, S-band Medium Power SPDT Switch

DESCRIPTION

- The CG2179M2 is a pHEMT GaAs SPDT (Single Pole Double Throw) switch. This device can operate from 0.05 GHz to 3.0GHz, having low insertion loss and high isolation.

FEATURES

- Control voltage :
  VC(H) = 1.8 to 5.3 V (3.0 V TYP.)
  VC(L) = -0.2 to 0.2 V (0 V TYP.)
- Low insertion loss :
  $L_{ins}1$ = 0.30 dB TYP. @ f = 0.05 to 0.5 GHz
  $L_{ins}2$ = 0.30 dB TYP. @ f = 0.5 to 1.0 GHz
  $L_{ins}3$ = 0.40 dB TYP. @ f = 1.0 to 2.0 GHz
  $L_{ins}4$ = 0.45 dB TYP. @ f = 2.0 to 2.5 GHz
  $L_{ins}5$ = 0.45 dB TYP. @ f = 2.5 to 3.0 GHz
- High isolation :
  ISL1 = 39 dB TYP. @ f = 0.05 to 0.5 GHz
  ISL2 = 33 dB TYP. @ f = 0.5 to 1.0 GHz
  ISL3 = 27 dB TYP. @ f = 1.0 to 2.0 GHz
  ISL4 = 26 dB TYP. @ f = 2.0 to 2.5 GHz
  ISL5 = 23 dB TYP. @ f = 2.5 to 3.0 GHz
- Power handling :
  $P_{in(0.5dB)}$ = +32 dBm TYP. @ f = 3.0 GHz,
  VC(H) = 3.0 V, VC(L) = 0 V

PACKAGE

- 6-pin mini mold Package
  (2.0mm x 1.25mm x 0.9mm)

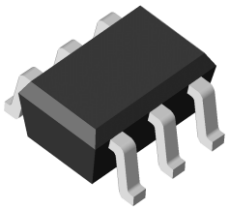

APPLICATIONS

- Wireless LAN (IEEE 802.11 b/g/n/ac)
- Bluetooth™

ORDERING INFORMATION

Part Number	Order Number	Package	Marking	Description
CG2179M2	CG2179M2-C4	6-pin mini mold package (Pb-Free)	C00	• Embossed tape 8 mm wide • Pin 4, 5, 6 face the perforation side of the tape • MOQ 10 kpcs/reel
CG2179M2-EVAL	CG2179M2-EVAL			• Evaluation Board with DC block capacitors, power supply bypass capacitors, and RF and DC connectors • MOQ 1

PIN CONFIGURATION AND INTERNAL BLOCK DIAGRAM

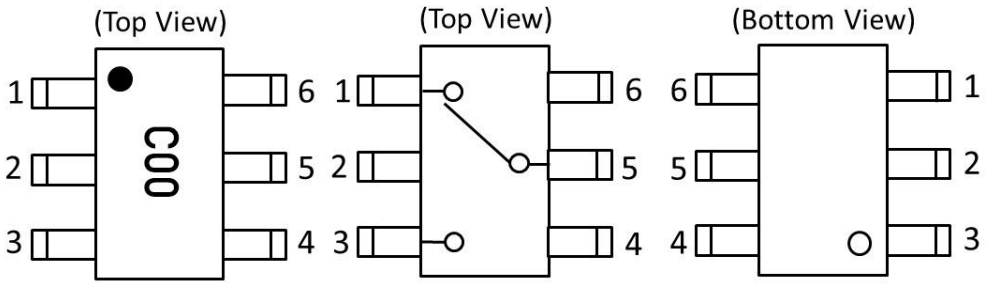

Pin No.	Pin Name
1	RF1
2	GND
3	RF2
4	VC2
5	RFC
6	VC1

TRUTH TABLE

VC1	VC2	RFC-RF1	RFC-RF2
Low	High	ON	OFF
High	Low	OFF	ON

ABSOLUTE MAXIMUM RATINGS

(T_A = +25˚C, unless otherwise specified)

Parameter	Symbol	Rating	Unit
Control Voltage	VC	6.0 Note 1	V
Input Power	$P_{in}1$	+33 Note 2	dBm
	$P_{in}2$	+29 Note 3	dBm
Operating Ambient Temperature	T_A	-45 ~ +85	˚C
Storage Temperature	T_{stg}	-55 ~ +150	˚C

Note 1. |VC1 - VC2| ≦ 6.0V
2. 3.0V ≦ |VC1 – VC2| ≦ 5.0V, 0.4GHz≦f
3. 3.0V ≦ |VC1 – VC2| ≦ 5.0V, 0.05GHz≦f≦0.4GHz

RECOMMENDED OPERATING RANGE

(T_A = +25˚C, unless otherwise specified)

Parameter	Symbol	MIN.	TYP.	MAX.	Unit
Operating Frequency	f	0.05	-	3.0	GHz
Switch Control Voltage (H)	VC(H)	+1.8	+3.0	+5.3	V
Switch Control Voltage (L)	VC(L)	-0.2	0	+0.2	V

ELECTRICAL CHARACTERISTICS 1

(T_A = +25˚C, VC(H) = 3.0V, VC(L) = 0V, Zo = 50Ω, DC Block Capacitance = 56pF, unless otherwise specified)

Parameter	Symbol	Condition	MIN.	TYP.	MAX.	Unit
Insertion Loss	$L_{INS}1$	f=0.05 to 0.5GHz Note 1	-	0.30	0.50	dB
	$L_{INS}2$	f=0.5 to 1.0GHz	-	0.30	0.50	dB
	$L_{INS}3$	f=1.0 to 2.0GHz	-	0.40	0.60	dB
	$L_{INS}4$	f=2.0 to 2.5GHz	-	0.45	0.65	dB
	$L_{INS}5$	f=2.5 to 3.0GHz	-	0.45	0.65	dB
Isolation	ISL1	f=0.05 to 0.5GHz Note 1	36	39	-	dB
	ISL2	f=0.5 to 1.0GHz	30	33	-	dB
	ISL3	f=1.0 to 2.0GHz	23	27	-	dB
	ISL4	f=2.0 to 2.5GHz	22	26	-	dB
	ISL5	f=2.5 to 3.0GHz	21	24	-	dB
Return Loss	RL	f=0.05 to 3.0GHz Note 1	15	20	-	dB
0.1dB Loss Compression Input Power **Note 2**	$P_{in(0.1dB)}$	f=0.05~0.5GHz Note 1	-	+26	-	dBm
		f=0.5~3.0GHz	-	+30	-	dBm
0.5dB Loss Compression Input Power **Note 3**	$P_{in(0.5dB)}$	f=0.05~0.5GHz Note 1	-	+28.5	-	dBm
		f=0.5~3.0GHz	-	+32	-	dBm
2nd Harmonics	2f0	f=3.0GHz, P_{in}=+20dBm	-	-85	-	dBc
3rd Harmonics	3f0	f=3.0GHz, P_{in}=+20dBm	-	-85	-	dBc
3rd Order Input Intercept Point	IIP_3	f=2.5GHz, 2-tone 1MHz Spacing	-	+58	-	dBm
Error Vector Magnitude	EVM	802.11g, 64QAM, 54Mbps Pin≦+25dBm	-	2.5	-	%
Switch Control Current	I_{CONT}	RF none	-	1	10	uA
Switching Speed	t_{SW}	50% CTL to 90/10% RF	-	50	-	ns

Note 1. DC block capacitance = 1000pF at f=0.05 to 0.5GHz

2. $P_{in(0.1dB)}$ is the measured input power level when the insertion loss increases 0.1dB more than that of the linear range.

3. $P_{in(0.5dB)}$ is the measured input power level when the insertion loss increases 0.5dB more than that of the linear range

ELECTRICAL CHARACTERISTICS 2

(T_A = +25˚C, VC(H) = 1.8V, VC(L) = 0V, Zo = 50Ω, DC Block Capacitance = 56pF, unless otherwise specified)

Parameter	Symbol	Condition	MIN.	TYP.	MAX.	Unit
Insertion Loss	$L_{INS}1$	f=0.05 to 0.5GHz Note 1	-	0.30	0.50	dB
	$L_{INS}2$	f=0.5 to 1.0GHz	-	0.30	0.50	dB
	$L_{INS}3$	f=1.0 to 2.0GHz	-	0.40	0.60	dB
	$L_{INS}4$	f=2.0 to 2.5GHz	-	0.45	0.65	dB
	$L_{INS}5$	f=2.5 to 3.0GHz	-	0.45	0.65	dB
Isolation	ISL1	f=0.05 to 0.5GHz Note 1	36	39	-	dB
	ISL2	f=0.5 to 1.0GHz	30	33	-	dB
	ISL3	f=1.0 to 2.0GHz	23	27	-	dB
	ISL4	f=2.0 to 2.5GHz	22	26	-	dB
	ISL5	f=2.5 to 3.0GHz	21	24	-	dB
Return Loss	RL	f=0.05 to 3.0GHz Note 1	15	20	-	dB
0.1dB Loss Compression Input Power **Note 2**	$P_{in(0.1dB)}$	f=0.05~0.5GHz Note 1	-	+19	-	dBm
		f=0.5~3.0GHz	-	+23	-	dBm
0.5dB Loss Compression Input Power **Note 3**	$P_{in(0.5dB)}$	f=0.05~0.5GHz Note 1	-	+22	-	dBm
		f=0.5~3.0GHz	-	+26	-	dBm
Switch Control Current	I_{CONT}	RF none	-	1	10	uA
Switching Speed	t_{SW}	50% CTL to 90/10% RF	-	50	-	ns

Note 1. DC block capacitance = 1000pF at f=0.05 to 0.5GHz

2. $P_{in(0.1dB)}$ is the measured input power level when the insertion loss increases 0.1dB more than that of the linear range.

3. $P_{in(0.5dB)}$ is the measured input power level when the insertion loss increases 0.5dB more than that of the linear range

EVALUATION CIRCUIT

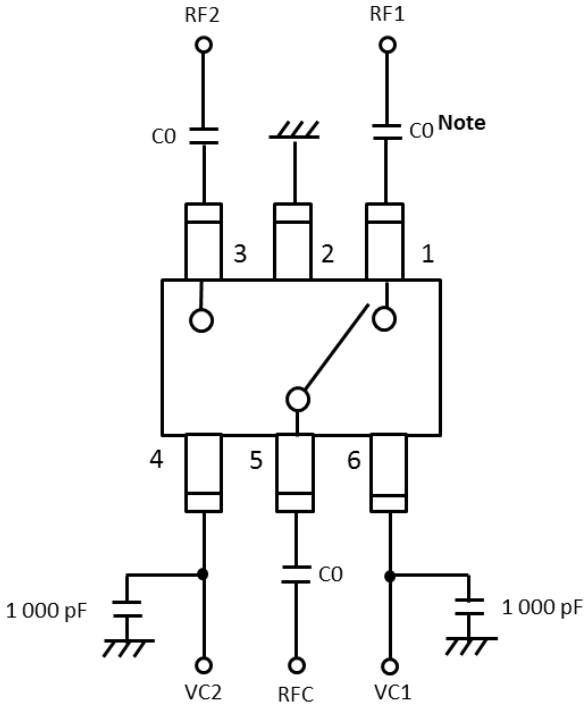

Note C0 : 0.05 to 0.5 GHz 1000pF
: 0.4 to 3.0 GHz 56pF

The application circuits and their parameters are for reference only and are not intended for use in actual designs.
DC Blocking Capacitors are required at all RF ports.

PACKAGE DIMENSIONS

6-pin mini mold package (Unit: mm)

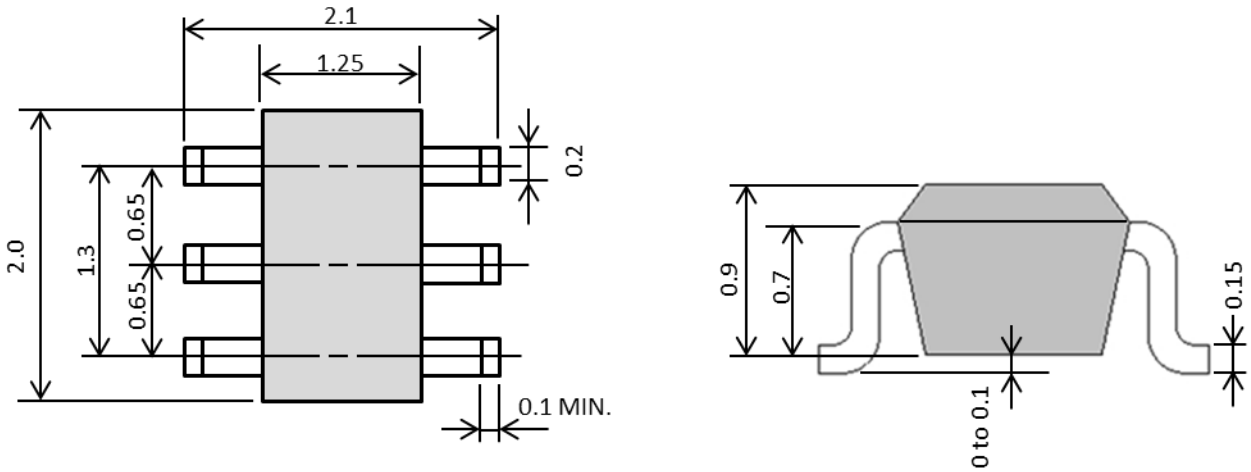

RECOMMENDED SOLDERING CONDITIONS

Recommended Soldering Conditions are available on CEL's Part Summary page under Associated Documents

REVISION HISTORY

Version	Change to current version	Page(s)
CDS-0008-03 (Issue A) February 17, 2016	Initial datasheet	N/A
CDS-0008-03 (Issue B) March 24, 2016	Added Eval Board ordering information Updated Marking information	1, 2
CDS-0008-03 (Issue C) August 11, 2016	Removed “Preliminary”	All
CDS-0008-03 (Issue D) January 11, 2017	Revised Electrical Characteristics table Added “Recommended Soldering Conditions” section	3, 5
CDS-0008-03 (Issue E) May 24, 2017	Updated Evaluation Circuit output pinouts - switched RF1 and RF2	4
CDS-0008-04 (Issue F) June 13, 2017	Added power handling @0.05GHz to 0.5GHz Added absolute maximum rating @0.05GHz≦f≦0.4GHz Revised recommended operating switch control voltage Updated Electrical Characteristics table and added a second Electrical characteristics table on page 4	1,2,3,4
CDS-0008-05 (Issue G) June 20, 2017	Added Error Vector Magnitude parameter to Electrical Characteristics table 1	3

[CAUTION]

- All information included in this document is current as of the date this document is issued. Such information, however, is subject to change without any prior notice.

- You should not alter, modify, copy, or otherwise misappropriate any CEL product, whether in whole or in part.

- CEL does not assume any liability for infringement of patents, copyrights, or other intellectual property rights of third parties by or arising from the use of CEL products or technical information described in this document. No license, expressed, implied or otherwise, is granted hereby under any patents, copyrights or other intellectual property rights of CEL or others.

- Descriptions of circuits, software and other related information in this document are provided only to illustrate the operation of semiconductor products and application examples. You are fully responsible for the incorporation of these circuits, software, and information in the design of your equipment. CEL assumes no responsibility for any losses incurred by you or third parties arising from the use of these circuits, software, or information.

- CEL has used reasonable care in preparing the information included in this document, but CEL does not warrant that such information is error free. CEL assumes no liability whatsoever for any damages incurred by you resulting from errors in or omissions from the information included herein.

- Although CEL endeavors to improve the quality and reliability of its products, semiconductor products have specific characteristics such as the occurrence of failure at a certain rate and malfunctions under certain use conditions. Please be sure to implement safety measures to guard them against the possibility of physical injury, and injury or damage caused by fire in the event of the failure of a CEL product, such as safety design for hardware and software including but not limited to redundancy, fire control and malfunction prevention, appropriate treatment for aging degradation or any other appropriate measures
  Because the evaluation of microcomputer software alone is very difficult, please evaluate the safety of the final products or system manufactured by you.

- Please use CEL products in compliance with all applicable laws and regulations that regulate the inclusion or use of controlled substances, including without limitation, the EU RoHS Directive.
  CEL assumes no liability for damages or losses occurring as a result of your noncompliance with applicable laws and regulations.

- This document may not be reproduced or duplicated, in any form, in whole or in part, without prior written consent of CEL.

- Please contact CEL if you have any questions regarding the information contained in this document or CEL products, or if you have any other inquiries.

[CAUTION]

This product uses gallium arsenide (GaAs) of the toxic substance appointed in laws and ordinances. GaAs vapor and powder are hazardous to human health if inhaled or ingested.

- Do not dispose in fire or break up this product.
- Do not chemically make gas or powder with this product.
- When discarding this product, please obey the laws of your country.
- Do not lick the product or in any way allow it to enter the mouth.

[CAUTION]

Although this device is designed to be as robust as possible, ESD (Electrostatic Discharge) can damage this device. This device must be protected at all times from ESD. Static charges may easily produce potentials of several kilovolts on the human body or equipment, which can discharge without detection. Industry-standard ESD precautions should be used at all times.

CEL Headquarters • 4590 Patrick Henry Drive • Santa Clara, CA 95054 • Tel: (408) 919-2500 • www.cel.com

For a complete list of sales offices, representatives and distributors,
Please visit our website: www.cel.com/contactus
For inquiries email us at rfw@cel.com

Mouser Electronics

Authorized Distributor

Click to View Pricing, Inventory, Delivery & Lifecycle Information:

CEL:

CG2179M2-C4 CG2179M2