DATA SHEET : CKRF2179MM26

L, S-band Middle Power SPDT Switch

Features

- Control voltage :
  VC(H) = 1.8 to 5.3 V (3.0V TYP.)
  VC(L) = -0.2 to 0.2 V (0V TYP.)
- Low Insertion Loss :
  $L_{ins}1$ = 0.30 dB TYP. @ f = 0.05 to 0.5 GHz
  $L_{ins}2$ = 0.30 dB TYP. @ f = 0.5 to 1.0 GHz
  $L_{ins}3$ = 0.40 dB TYP. @ f = 1.0 to 2.0 GHz
  $L_{ins}4$ = 0.45 dB TYP. @ f = 2.0 to 2.5 GHz
  $L_{ins}5$ = 0.45 dB TYP. @ f = 2.5 to 3.0 GHz
- High Isolation :
  ISL1= 39 dB TYP. @ f = 0.05 to 0.5 GHz
  ISL2= 33 dB TYP. @ f = 0.5 to 1.0 GHz
  ISL3= 27 dB TYP. @ f = 1.0 to 2.0 GHz
  ISL4= 26 dB TYP. @ f = 2.0 to 2.5 GHz
  ISL5= 23 dB TYP. @ f = 2.5 to 3.0 GHz
- Handling power :
  $P_{in(0.5dB)}$ = +32 dBm TYP. @ f = 3.0 GHz,
  VC(H) = 3.0 V, VC(L) = 0 V

Applications

- Wireless LAN (IEEE 802.11 b/g)

Package

- 6-pin mini mold package
  (2.0mm x 1.25mm x 0.9mm)

Description

- The CKRF2179MM26 is a pHEMT GaAs SPDT (Single Pole Double Throw) switch. This device can operate from 0.05 to 3.0GHz, having low insertion loss and high isolation.

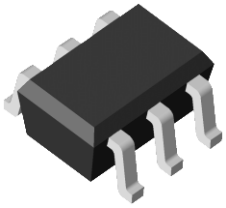

Pin Configuration And Internal Block Diagram

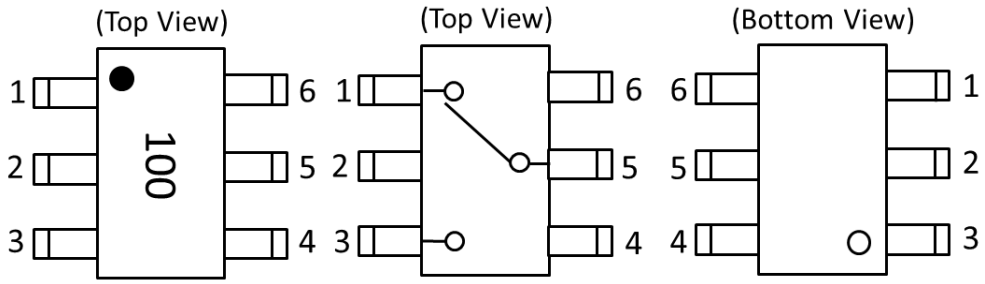

Pin No.	Pin Name
1	RF1
2	GND
3	RF2
4	VC2
5	RFC
6	VC1

Ordering Information

Part Number	Order Number	Package	Marking	Supplying Form
CKRF2179MM26-C4	CKRF2179MM26-C4	･6-pin mini mold package (Pb-Free)	100	･Embossed tape 8 mm wide ･Pin 4, 5, 6 face the perforation side of the tape ･Qty 10 Kpcs/reel

Absolute Maximum Ratings

(T_A=+25℃, unless otherwise specified)

Parameter	Symbol	Rating	Unit
Control Voltage	VC	6.0 Note 1	V
Input Power	$P_{in}1$	+33 Note 2	dBm
	$P_{in}2$	+29 Note 3	dBm
Operating Ambient Temperature	T_A	-45～+85	℃
Storage Temperature	T_{stg}	-55～+150	℃

Note 1. |VC1 - VC2|≦6.0V

2. 3.0V≦|VC1 – VC2|≦5.0V, 0.4GHz≦f

3. 3.0V≦|VC1 – VC2|≦5.0V, 0.05GHz≦f≦0.4GHz

Recommended Operating Range

(T_A=+25℃, unless otherwise specified)

Parameter	Symbol	MIN.	TYP.	MAX.	Unit
Operating Frequency	f	0.05	-	3.0	GHz
Switch Control Voltage (H)	VC(H)	+1.8	+3.0	+5.3	V
Switch Control Voltage (L)	VC(L)	-0.2	0	+0.2	V

Truth Table

VC1	VC2	RFC-RF1	RFC-RF2
Low	High	ON	OFF
High	Low	OFF	ON

Electrical Characteristics 1

(T_A=+25℃, VC(H)=3.0V, VC(L)=0V, Zo=50Ω, DC Block Capacitance=56pF, unless otherwise specified)

Parameter	Symbol	Condition	MIN.	TYP.	MAX.	Unit
Insertion Loss	$L_{INS}1$	f=0.05 to 0.5GHz Note 1	---	0.30	0.50	dB
	$L_{INS}2$	f=0.5 to 1.0GHz	---	0.30	0.50	dB
	$L_{INS}3$	f=1.0 to 2.0GHz	---	0.40	0.60	dB
	$L_{INS}4$	f=2.0 to 2.5GHz	---	0.45	0.65	dB
	$L_{INS}5$	f=2.5 to 3.0GHz	---	0.45	0.65	dB
Isolation	ISL1	f=0.05 to 0.5GHz Note 1	36	39	---	dB
	ISL2	f=0.5 to 1.0GHz	30	33	---	dB
	ISL3	f=1.0 to 2.0GHz	23	27	---	dB
	ISL4	f=2.0 to 2.5GHz	22	26	---	dB
	ISL5	f=2.5 to 3.0GHz	21	24	---	dB
Input Return Loss	RL_{in}	f=0.05 to 3.0GHz Note 1	15	20	---	dB
Output Return Loss	RL_{out}	f=0.05 to 3.0GHz Note 1	15	20	---	dB
0.1dB Loss Compression Input Power Note 2	$P_{in(0.1dB)}$	f=0.05～0.5GHz Note 1	---	+26	---	dBm
		f=0.5～3.0GHz	---	+30	---	dBm
0.5dB Loss Compression Input Power Note 3	$P_{in(0.5dB)}$	f=0.05～0.5GHz Note 1	---	+28.5	---	dBm
		f=0.5～3.0GHz	---	+32	---	dBm
2nd Harmonics	2f0	f=3.0GHz, P_{in}=+20dBm	---	-85	---	dBc
3rd Harmonics	3f0	f=3.0GHz, P_{in}=+20dBm	---	-85	---	dBc
3rd Order Input Intercept Point	IIP_3	f=2.5GHz, 2-tone 1MHz Spacing	---	+58	---	dBm
Error Vector Magnitude	EVM	802.11g, 64QAM, 54Mbps Pin≦+25dBm	---	2.5	---	%
Switch Control Current	I_{CONT}	RF none	---	1	10	uA
Switching Speed	T_{SW}	50% CTL to 90/10% RF	---	50	---	ns

Note 1. DC block capacitance = 1000pF at f=0.05 to 0.5GHz

2. $P_{in(0.1dB)}$ is the measured input power level when the insertion loss increases 0.1dB more than that of the linear range.

3. $P_{in(0.5dB)}$ is the measured input power level when the insertion loss increases 0.5dB more than that of the linear range.

Electrical Characteristics 2

(T_A=+25℃, VC(H)=1.8V, VC(L)=0V, Zo=50Ω, DC Block Capacitance=56pF, unless otherwise specified)

Parameter	Symbol	Condition	MIN.	TYP.	MAX.	Unit
Insertion Loss	$L_{INS}1$	f=0.05 to 0.5GHz Note 1	---	0.30	0.50	dB
	$L_{INS}2$	f=0.5 to 1.0GHz	---	0.30	0.50	dB
	$L_{INS}3$	f=1.0 to 2.0GHz	---	0.40	0.60	dB
	$L_{INS}4$	f=2.0 to 2.5GHz	---	0.45	0.65	dB
	$L_{INS}5$	f=2.5 to 3.0GHz	---	0.45	0.65	dB
Isolation	ISL1	f=0.05 to 0.5GHz Note 1	36	39	---	dB
	ISL2	f=0.5 to 1.0GHz	30	33	---	dB
	ISL3	f=1.0 to 2.0GHz	23	27	---	dB
	ISL4	f=2.0 to 2.5GHz	22	26	---	dB
	ISL5	f=2.5 to 3.0GHz	21	24	---	dB
Input Return Loss	RL_{in}	f=0.05 to 3.0GHz Note 1	15	20	---	dB
Output Return Loss	RL_{out}	f=0.05 to 3.0GHz Note 1	15	20	---	dB
0.1dB Loss Compression Input Power Note 2	$P_{in(0.1dB)}$	f=0.05～0.5GHz Note 1	---	+19	---	dBm
		f=0.5～3.0GHz	---	+23	---	dBm
0.5dB Loss Compression Input Power Note 3	$P_{in(0.5dB)}$	f=0.05～0.5GHz Note 1	---	+22	---	dBm
		f=0.5～3.0GHz	---	+26	---	dBm
Switch Control Current	I_{CONT}	RF none	---	1	10	uA
Switching Speed	T_{SW}	50% CTL to 90/10% RF	---	50	---	ns

Note 1. DC block capacitance = 1000pF at f=0.05 to 0.5GHz

2. $P_{in(0.1dB)}$ is the measured input power level when the insertion loss increases 0.1dB more than that of the linear range.

3. $P_{in(0.5dB)}$ is the measured input power level when the insertion loss increases 0.5dB more than that of the linear range.

Evaluation Circuit

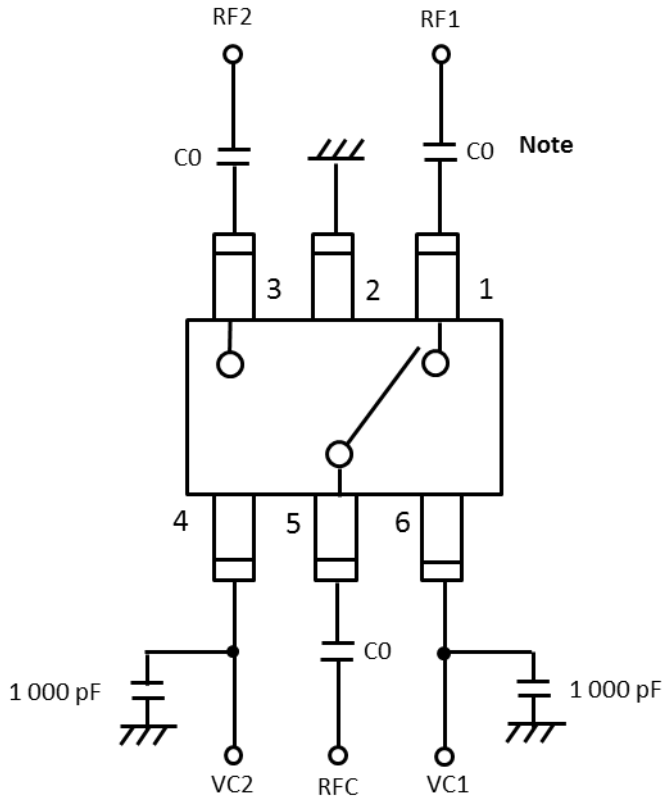

Note C0 : 0.05 to 0.5 GHz 1000pF
: 0.4 to 3.0 GHz 56pF

The application circuits and their parameters are for reference only and are not intended for use in actual design-ins. This device is used it is necessary to use DC Block Capacitance.

Package Dimensions

6-pin mini mold (Unit : mm)

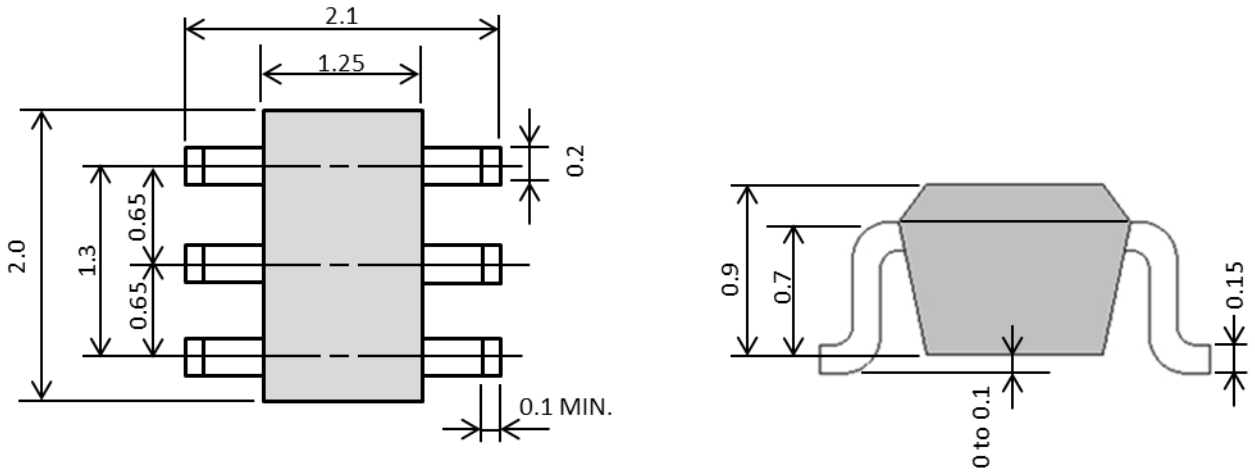

PCB Layout Footprint

6-pin mini mold (Unit : mm)

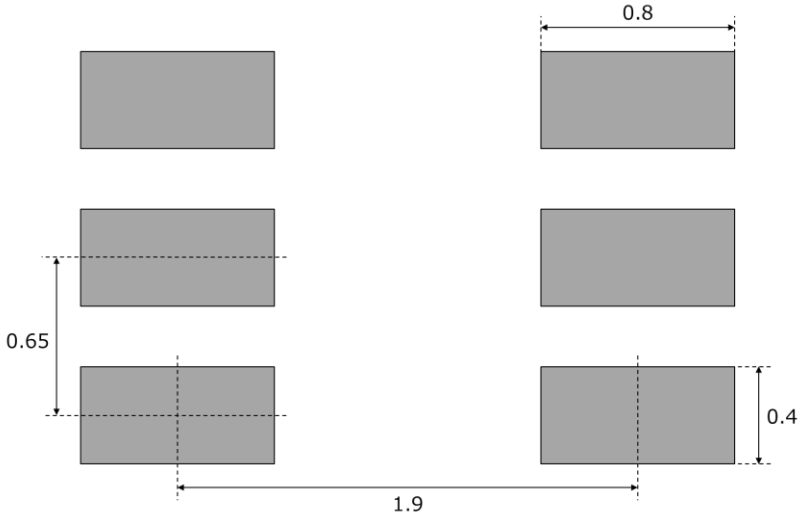

The PCB Layout Footprint in this document is for reference only.

[CAUTION]

- All information included in this document is current as of the date this document is issued. Such information, however, is subject to change without any prior notice.

- You should not alter, modify, copy, or otherwise misappropriate any CDK product, whether in whole or in part.

- CDK does not assume any liability for infringement of patents, copyrights, or other intellectual property rights of third parties by or arising from the use of CDK products or technical information described in this document. No license, express, implied or otherwise, is granted hereby under any patents, copyrights or other intellectual property rights of CDK or others.

- Descriptions of circuits, software and other related information in this document are provided only to illustrate the operation of semiconductor products and application examples. You are fully responsible for the incorporation of these circuits, software, and information in the design of your equipment. CDK assumes no responsibility for any losses incurred by you or third parties arising from the use of these circuits, software, or information.

- CDK has used reasonable care in preparing the information included in this document, but CDK does not warrant that such information is error free. CDK assumes no liability whatsoever for any damages incurred by you resulting from errors in or omissions from the information included herein.

- Although CDK endeavors to improve the quality and reliability of its products, semiconductor products have specific characteristics such as the occurrence of failure at a certain rate and malfunctions under certain use conditions. Please be sure to implement safety measures to guard them against the possibility of physical injury, and injury or damage caused by fire in the event of the failure of a CDK product, such as safety design for hardware and software including but not limited to redundancy, fire control and malfunction prevention, appropriate treatment for aging degradation or any other appropriate measures
  Because the evaluation of microcomputer software alone is very difficult, please evaluate the safety of the final products or system manufactured by you.

- Please use CDK products in compliance with all applicable laws and regulations that regulate the inclusion or use of controlled substances, including without limitation, the EU RoHS Directive.
  CDK assumes no liability for damages or losses occurring as a result of your noncompliance with applicable laws and regulations.

- This document may not be reproduced or duplicated, in any form, in whole or in part, without prior written consent of CDK.

- Please contact a CDK if you have any questions regarding the information contained in this document or CDK products, or if you have any other inquiries.

[Caution in the gallium arsenide (GaAs) product handling]

This product uses gallium arsenide (GaAs) of the toxic substance appointed in laws and ordinances. GaAs vapor and powder are hazardous to human health if inhaled or ingested.

- Do not dispose in fire or break up this product.
- Do not chemically make gas or powder with this product.
- When discard this product, please obey the law of your country.
- Do not lick the product or in any way allow it to enter the mouth.

[CAUTION]

Although this device is designed to be as robust as possible, ESD (Electrostatic Discharge) can damage this device. This device must be protected at all times from ESD. Static charges may easily produce potentials of several kilovolts on the human body or equipment, which can discharge without detection. Industry-standard ESD precautions should be used at all times.

CHUO DENSHI KOGYO CO., LTD
3400, Matsubase-machi Koyama, Uki-shi,
Kumamoto, 869-0512, JAPAN
Tel : +81-964-32-2730
Fax : +81-964-32-3549
URL : http://www.en.cdk.co.jp/

Contact info for inquiries
Electronic Devices Division Sales and Planning Depertment
TEL : +81-964-32-2750
E-mail : info@cdk.co.jp
FAX : +81-964-32-3549

© 2017 CHUO DENSHI KOGYO CO., LTD. All rights reserved.