DATA SHEET

SKY65366-21: 400 MHz Transmit/Receive Front-End Module

Applications

- Automated meter reading
- Advanced metering infrastructure
- ISM systems
- Range extender

Features

- Transmit output power: +30.2 dBm
- High-efficiency PA
- Analog power control
- Receive path NF < 2.2 dB
- PA bypass mode
- LNA low current mode with external resistor
- LNA bypass mode
- Integrated control logic
- Internal RF match and bias circuits
- All RF ports internally DC blocked
- Shutdown mode
- Small footprint, MCM (28-pin, 6 x 6 mm) package (MSL3, 260 °C per JEDEC J-STD-020)

Skyworks Green™ products are compliant with all applicable legislation and are halogen-free. For additional information, refer to *Skyworks Definition of Green™*, document number SQ04–0074.

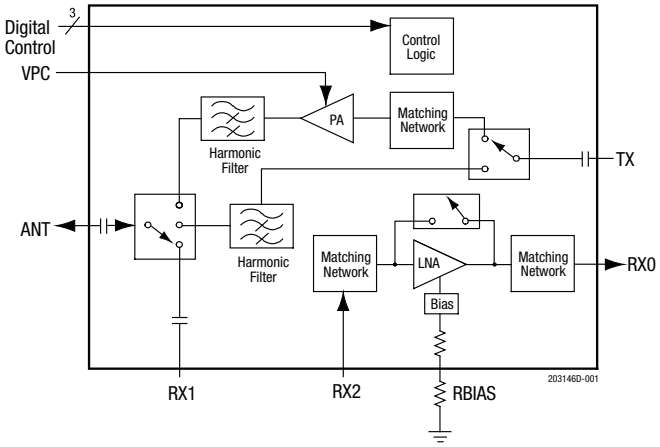

Figure 1. SKY65366-21 Block Diagram

Description

The SKY65366-21 is a high-performance, transmit/receive (T/R) range extender. The device provides a complete T/R chain with T/R switches.

The device transmit chain features +30.2 dBm output. The device receive chain features a low-noise amplifier (LNA) with a 1.8 dB noise figure (NF) and 21 dB gain. The cascaded NF and gain, taking into account the 0.4 dB insertion loss transmit/receive antenna switch, are 2.2 dB and 20.6 dB, respectively.

The module also has a shutdown mode, PA bypass mode, and LNA bypass mode to minimize power consumption.

The device is mounted in a 28-pin, 6 x 6 mm Multi-Chip Module (MCM) surface-mount technology (SMT) package, which allows for a highly manufacturable low-cost solution.

A block diagram of the SKY65366-21 is shown in Figure 1. The device package and pinout for the 28-pin MCM are shown in Figure 2. Signal pin assignments and functional pin descriptions are provided in Table 1.

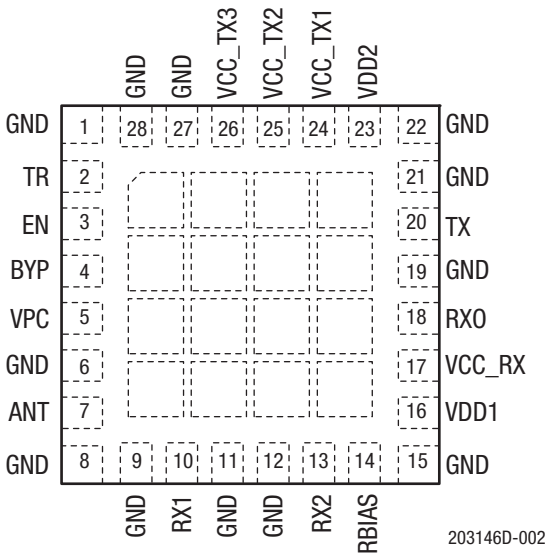

Figure 2. SKY65366-21 Pinout (Top View)

Table 1. SKY65366-21 Signal Descriptions

Pin	Name	Description	Pin	Name	Description
1	GND	Ground	15	GND	Ground
2	TR	Digital control input: transmit/receive mode	16	VDD1	3.3 V power supply
3	EN	Digital control input: shutdown mode	17	VCC_RX	3.3 V power supply
4	BYP	Digital control input: receive bypass mode	18	RXO	Receive output
5	VPC	Transmit output power adjustment	19	GND	Ground
6	GND	Ground	20	TX	Transmit path input port. Internally matched to 50 Ω.
7	ANT	Antenna switch common port. Internally matched to 50 Ω.	21	GND	Ground
8	GND	Ground	22	GND	Ground
9	GND	Ground	23	VDD2	3.9 V power supply
10	RX1	Receive arm of antenna switch. Internally matched to 50 Ω.	24	VCC_TX1	3.9 V power supply
11	GND	Ground	25	VCC_TX2	3.9 V power supply
12	GND	Ground	26	VCC_TX3	3.9 V power supply
13	RX2	LNA and bypass switch output port. Internally matched to 50 Ω.	27	GND	Ground
14	RBIAS	LNA bias setting resistor	28	GND	Ground

Technical Description

The SKY65366-21 consists of a complete T/R chain with T/R switches contained in the module. A single-pole, triple-throw (SP3T) switch selects between the receive, transmit, and transmit bypass paths. The module has a shutdown mode to minimize power consumption.

Three digital input pins (TR, EN, and BYP) are used to select between transmit, transmit bypass, receive, receive bypass, or shutdown mode.

Transmit Path

The transmit path contains a power amplifier (PA) optimized for saturated performance. The PA output is internally matched for optimum output power and efficiency into a 50 Ω load impedance. The PA output is passed through an harmonic filter before being fed through the SP3T switch. The PA input provides a good return loss into a 50 Ω source impedance.

Transmit output power is controlled by the VPC pin, which is normally set to 2.25 V DC voltage. The nominal DC input impedance into the VPC pin is 50 kΩ.

Receive Path

The receive path contains an LNA with bypass switch. The LNA impedance matching networks are internal to the module and have been optimized for a low NF while maintaining good return losses into a 50 Ω source and load impedance. The receive arm of the SP3T switch and the LNA input are connected to module pins to allow an external filter to be inserted into the receive path.

Operation Mode Control

The five SKY65366-21 operating modes are controlled by the three digital pins: TR, EN, and BYP (pins 2, 3, and 4, respectively). The control logic truth table is provided in Table 2.

Electrical and Mechanical Specifications

The absolute maximum ratings of the SKY65366-21 are provided in Table 3. Recommended operating conditions are specified in Table 4. Electrical specifications are provided in Tables 5, 6, and 7.

Table 2. SKY65366-21 Operating Modes Truth Table[1]

Operating Mode	Control Voltage			Internal States				
	TR (Pin 2)	EN (Pin 3)	BYP (Pin 4)	PA	LNA	LNA Bypass Switch	T/R Switch	PA Bypass Switch
Transmit	1	1	0	On	Off	Open	PA	PA
Transmit bypass	1	1	1	Off	Off	Open	PA bypass	PA bypass
Receive	0	1	0	Off	On	Open	RX1	Open
Receive Bypass	0	1	1	Off	Off	Through	RX1	Open
Shutdown[2]	X	0	X	Off	Off	Open	Open	Open

[1] See Table 4 for logic 0 and 1 characteristics. "X" = don't care state, defined as a valid state of logic 1 or 0. Control signals must be a valid logic 1 or 0. Performance is not guaranteed if control inputs are floated.

[2] In the high state, TR, EN, and BYP have an input current of 33 μA due to an internal 100 kΩ pulldown resistance. For the lowest leakage current, the high state is not recommended for TR and BYP when the device is in shutdown mode (EN = 0).

Table 3. SKY65366-21 Absolute Maximum Ratings[1]

Parameter	Symbol	Minimum	Maximum	Units
LNA supply voltage	VCC_RX	-0.3	+5.0	V
LNA supply current	I_{CC_RX}		20	mA
PA supply voltage	VCC_TX1/2/3	-0.3	+6.0	V
Digital supply voltage	V_{DD1}	-0.5	+5.5	V
Digital supply voltage	V_{DD2}	-0.5	+5.5	V
Digital control voltage (TR, EN, BYP)	V_{CTL}	-0.5	V_{DD1} + 0.3	V
Transmit output power control voltage	VPC	-0.3	+5.0	V
Receive RF input power (RX2)	P_{IN_RX2}		+5	dBm
Receive RF input power (ANT)	P_{IN_ANT}		+33	dBm
Transmit RF input power	P_{IN_TX}		+15	dBm
Transmit RF input power, bypass mode	$P_{IN_TX_BYP}$		+20	dBm
Operating case temperature[2]	T_C	-40	+85	°C
Storage temperature	T_{STG}	-40	+150	°C
Junction temperature	T_J		+150	°C
T/R port load VSWR in transmit mode	VSWR		10:1	-
Electrostatic discharge: Charged Device Model (CDM), Class C3 Human Body Model (HBM), Class 1A	ESD		 1000 250	 V V

[1] Exposure to maximum rating conditions for extended periods may reduce device reliability. There is no damage to device with only one parameter set at the limit and all other parameters set at or below their typical value as provided in Table 4.

[2] Nominal thermal resistance, junction-to-case, is 18 °C/W.

***CAUTION**: Although this device is designed to be as robust as possible, electrostatic discharge (ESD) can damage this device. This device must be protected at all times from ESD. Static charges may easily produce potentials of several kilovolts on the human body or equipment, which can discharge without detection. Industry-standard ESD precautions should be used at all times.*

Table 4. SKY65366-21 Recommended Operating Conditions

Parameter	Symbol	Min	Typ	Max	Units
Transmit frequency range	f	400		500	MHz
Receive frequency range	f	400		500	MHz
LNA supply voltage	VCC_RX	3.00	3.30	3.45	V
Digital supply voltage	VDD1 VDD2	3.00 3.70	VCC_RX VCC_TX1/2/3	3.45 4.00	V V
PA supply voltage	VCC_TX1/2/3	3.70	3.90	4.00	V
Digital input voltage, logic 0 (TR, EN, BYP)	V_{CTL}	0		0.7	V
Digital input voltage, logic 1 (TR, EN, BYP)	V_{CTL}	1.6		VDD1	V
Transmit output power control voltage	VPC	0	2.25	2.50	V
Receive RF input power (RX2)	P_{IN_RX2}			-15	dBm
Transmit RF input power (TX)	P_{IN_TX}		+10	+13	dBm
Transmit duty cycle				50	%

Table 5. SKY65366-21 DC Electrical Specifications[1]
(VCC_RX = VDD1 = 3.3 V, VCC_TX1/2/3 = VDD2 = 3.9 V, T_C = 25 °C, RBIAS = 0 Ω, VPC = 2.25 V, No RF Input Power, Unless Otherwise Noted)

Parameter	Symbol	Test Condition	Min	Typ	Max	Units
Quiescent current, receive mode[2]	I_{Q_RX}			12	20.0	mA
Quiescent current, receive bypass mode[2]	I_{Q_BYP}			50	76	µA
VDD1 quiescent current, transmit mode	I_{Q_VDD1}	VPC = 2.25 V		22	25	mA
VCC_TX1/2/3 quiescent current, transmit mode	I_{Q_TX}	T_C = 25 °C, VCC_TX1/2/3 = 3.9 V, VPC = 2.25 V		26		mA
VCC_TX1/2/3 operating current, transmit mode	I_{OP_TX}	P_{IN} = +10 dBm, VPC = 2.25 V, f = 418 MHz, VCC_TX1/2/3 = 3.9 V		780	880	mA
VDD1 quiescent current, transmit bypass mode[3]	I_{DD1}			25		µA
VCC_TX1/2/3 quiescent current, transmit bypass mode[3]	I_{Q_TXB}			0.5		µA
VCC_RX quiescent current, shutdown mode[3]	$I_{Q_SD_RX}$			0.025		µA
VCC_TX1/2/3 quiescent current, shutdown mode[3]	$I_{Q_SD_TX}$			0.3		µA
Digital input current, logic 1[3]	I_H			33		µA
Digital input current, logic 0[3]	I_L			0		µA

[1] Performance is guaranteed only under the conditions listed in this table. Modes are established as indicated in Table 2. Minimum and maximum values are verified in production by measurement at 25 °C under typical operating conditions.

[2] Total current drawn from VCC_RX and VDD1 supplies.

[3] Not production tested.

Table 6. SKY65366-21 Electrical Specifications: Receive and Receive Bypass Mode[1] (1 of 2)
(VCC_RX = VDD1 = 3.3 V, VCC_TX1/2/3 = VDD2 = 3.9 V, T_C = 25 °C, f = 412 to 424 MHz, 50 Ω Source and Load Impedance, CW Input, RBIAS = 0 Ω, Unless Otherwise Noted)

Parameter	Symbol	Test Condition	Min	Typ	Max	Units
Receive Mode: RX2 to Receive Output Path						
Small signal gain	G		19	21		dB
Noise figure	NF	T_C = 25 °C VCC_RX = 3.3 V		1.8	2.1	dB
Noise figure variation over temperature	NF_{TEMP}			±0.3		dB
1 dB input compression point	IP1dB	1 dB gain compression	-19	-17		dBm
Third order input intercept point	IIP3	P_{IN} = -30 dBm/tone, 200 kHz spacing	-11	-8.5		dBm
Input return loss	$\|S_{11}\|$			12		dB
Output return loss	$\|S_{22}\|$			10		dB
Reverse isolation	$\|S_{12}\|$			27		dB
Non-harmonic spurious[2]	P_{SPUR}	VSWR 10:1, all phases, unused port open-circuit			-50	dBm
Transition time[2]	t			0.5		µs

Table 6. SKY65366-21 Electrical Specifications: Receive and Receive Bypass Mode[1] (2 of 2)
(VCC_RX = VDD1 = 3.3 V, VCC_TX1/2/3 = VDD2 = 3.9 V, Tc = 25 °C, f = 412 to 424 MHz, 50 Ω Source and Load Impedance, CW Input, RBIAS = 0 Ω, Unless Otherwise Noted)

Parameter	Symbol	Test Condition	Min	Typ	Max	Units
Receive Bypass Mode: RX2 to Receive Output Path						
Insertion loss	IL			2	3	dB
1 dB input compression point	IP1dB	1 dB gain compression	12	14		dBm
Third order input intercept point	IIP3	P_{IN} = 0 dBm/tone, 200 kHz spacing	+28	+34		dBm
Input return loss	|S11|		10	16		dB
Output return loss	|S22|		10	28		dB
Transition time[2]	t			0.5		µs
Receive and Receive Bypass Mode: ANT to RX1 Path						
Insertion loss	IL			0.4	0.9	dB
1 dB input compression point[2]	$IP1dB_{ANT}$	1 dB gain compression	+24			dBm
Third order input intercept point[2]	$IIP3_{ANT}$	P_{IN} = 0 dBm/tone, 200 kHz spacing		+35		dBm
Input return loss	|S11|		10	18		dB
Output return loss	|S22|		10	20		dB
Transition time[2]	t			0.5		µs

[1] Performance is guaranteed only under the conditions listed in this table. Modes are established as indicated in Table 2. Minimum and maximum values are verified in production by measurement at 25 °C and f = 418 MHz under typical operating conditions.

[2] Not production tested.

Table 7. SKY65366-21 Electrical Specifications: Transmit Mode[1]
(VCC_RX = VDD1 = 3.3 V, VCC_TX1/2/3 = VDD2 = 3.9 V, P_{IN} = +10 dBm, T_C = 25 °C, f = 412 to 424 MHz, VPC = 2.25 V, 50 Ω Source and Load Impedance, CW Input, Unless Otherwise Noted)

Parameter	Symbol	Test Condition	Min	Typ	Max	Units
TX to ANT Path						
Output power[2]	P_{OUT}	T_C = +25 °C VCC_TX1/2/3 = 3.9 V T_C = -30 to +60 °C VCC_TX1/2/3 = 3.7 to 4 V	 +29.5 +29.2	 +30.2	 +32.0	 dBm dBm
Output power control[3]	P_{CTL}	VPC = 0 V to 2.25 V	40	62		dB
Power-added efficiency[5]	PAE			35		%
2nd to 10th harmonic[4]	2fo to 10fo	Without external filter With external filter[5]		-70 -86	-50 -78	dBc dBc
Input return loss	|S11|		10	16		dB
Output return loss	|S22|			13		dB
Non-harmonic spurious[5]	P_{SPUR}	VSWR 6:1, all phases			-50	dBm
Power on time[5]	T			1.0		µs
TX to ANT Path, Transmit Bypass Mode						
Insertion loss	IL			2.0	2.5	dB
1 dB input compression point[5]	IP1dB		+24			dBm
Third order input intercept point[5]	IIP3	P_{IN} = 0 dBm		+38		dBm
2nd harmonic	2fo	P_{IN} = +12 dBm		-80	-40	dBc
3rd harmonic	3fo	P_{IN} = +12 dBm		-80	-40	dBc
Transmit bypass path rejection	R_{2FO} R_{3FO}	@ 2fo @ 3fo	22 30	27 49		dB dB
Input return loss	|S11|		10	24		dB
Output return loss	|S22|		10	24		dB
Transition time[5]	T			0.5		µs
ANT to RX1 Path						
Isolation	|S21|		18	33		dB
ANT to RX1 Path, Transmit Bypass Mode						
Isolation	|S21|		18	33		dB

1 Performance is guaranteed only under the conditions listed in this table. Modes are established as indicated in Table 2. Minimum and maximum values are verified in production by measurement at 25 °C and f = 418 MHz under typical operating conditions.

2 Output power rated at the antenna output. PA output power is actually 1.5 dB higher.

3 Output power control is the difference between the output power at VPC = 2.25 V and VPC = 0 V.

4 Only the 2nd to 5th harmonics are production tested. The 6th to 10th harmonics are characterized only. Harmonics can be reduced with external filtering, as shown in Figure 3.

5 Not production tested.

Evaluation Board Description

The SKY65366-21 Evaluation Board is used to test the performance of the SKY65366-21 Transmit/Receive Range Extender. A typical application schematic diagram is provided in Figure 3. A Low-Pass Filter (LPF) can be incorporated on the ANT port to provide additional rejection of PA output harmonic levels and/or limit unwanted signals from entering the receive path. A three-section LPF is indicated for this function in Figure 3.

An Evaluation Board schematic diagram is provided in Figure 4. Typical part marking appears in Figure 5. An assembly drawing for the Evaluation Board is shown in Figure 6, and the layer detail is provided in Figure 7.

Package Dimensions

The PCB layout footprint for the SKY65366-21 is provided in Figure 8. Package dimensions are shown in Figure 9, and tape and reel dimensions are provided in Figure 10.

Package and Handling Information

Since the device package is sensitive to moisture absorption, it is baked and vacuum packed before shipping. Instructions on the shipping container label regarding exposure to moisture after the container seal is broken must be followed. Otherwise, problems related to moisture absorption may occur when the part is subjected to high temperature during solder assembly.

The SKY65366-21 is rated to Moisture Sensitivity Level 3 (MSL3) at 260 °C. It can be used for lead or lead-free soldering. For additional information, refer to Skyworks Application Note, *PCB Design and SMT Assembly/Rework Guidelines for MCM-L Packages*, document number 101752.

Care must be taken when attaching this product, whether it is done manually or in a production solder reflow environment. Production quantities of this product are shipped in a standard tape and reel format.

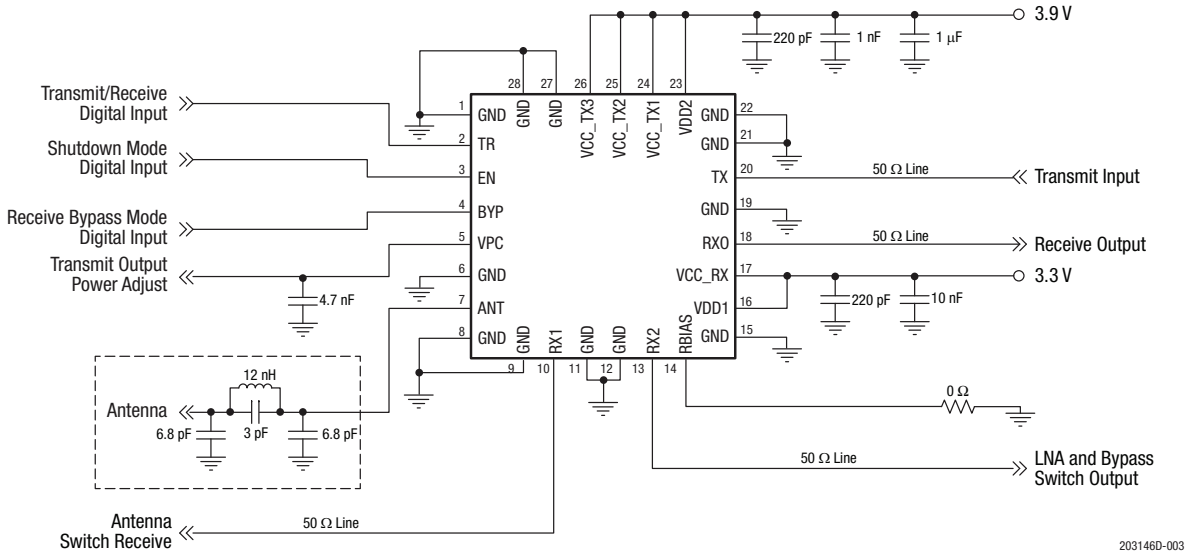

Figure 3. SKY65366-21 Typical Application Schematic

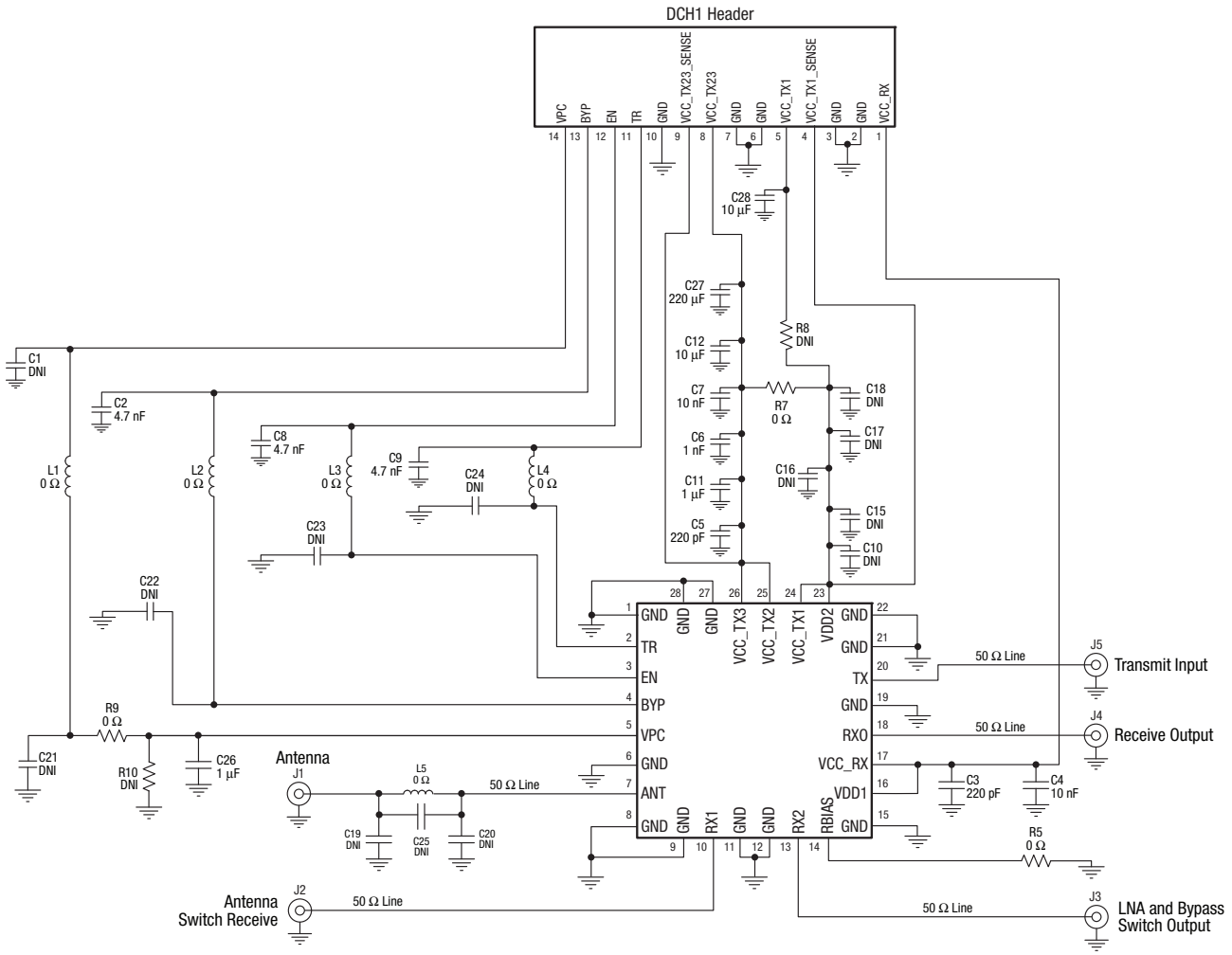

Notes:

Some component labels may be different from the corresponding component symbol shown here.
Component values, however, are accurate as of the date of this data sheet.

PCB Recommendations:

Metal Layer 1 = RF traces + control lines. Core thickness between top RF layer and ground plane is critical.
Metal Layer 2 = Solid ground plane. No traces routing.
Metal Layer 3 and 4 = Control lines + VCC traces (no VCC plane).
Pour copper on each layer connected to the ground plane. Use VCC traces in a star distribution pattern.
Always use 4 layers.

203164D-004

Figure 4. SKY65366-21 Evaluation Board Schematic

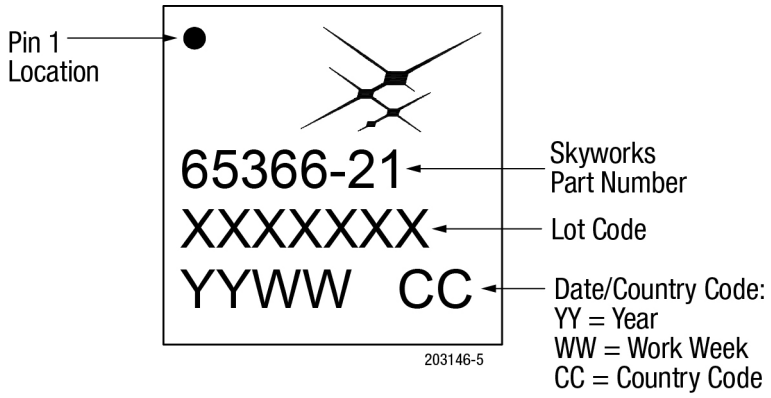

Figure 5. SKY65366-21 Typical Part Marking (Top View)

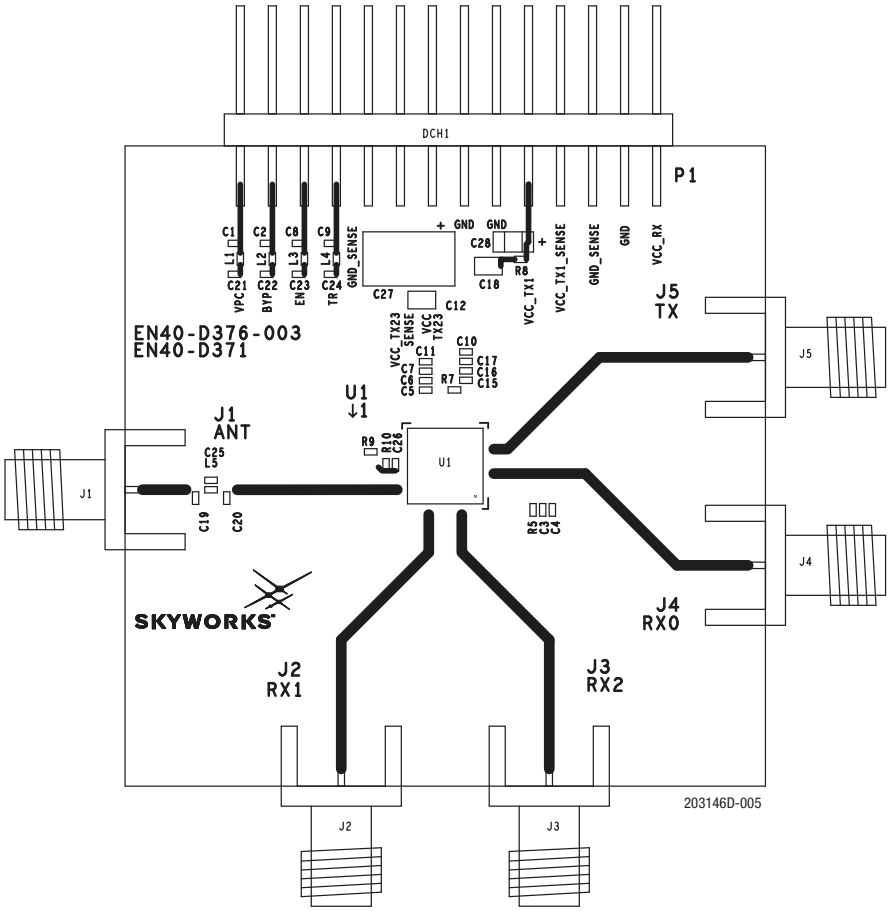

Figure 6. SKY65366-21 Evaluation Board Assembly Diagram

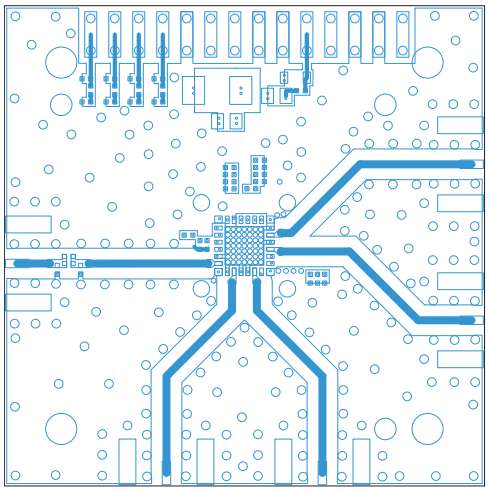

Layer 1: Top – Metal

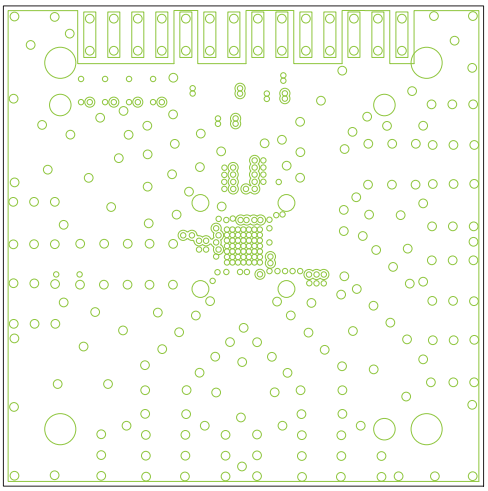

Layer 2: Ground

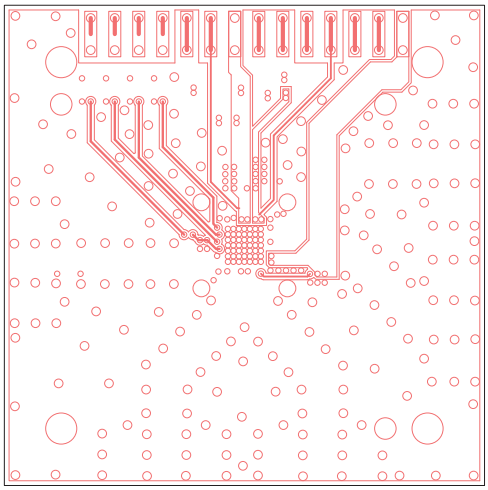

Layer 3: Ground

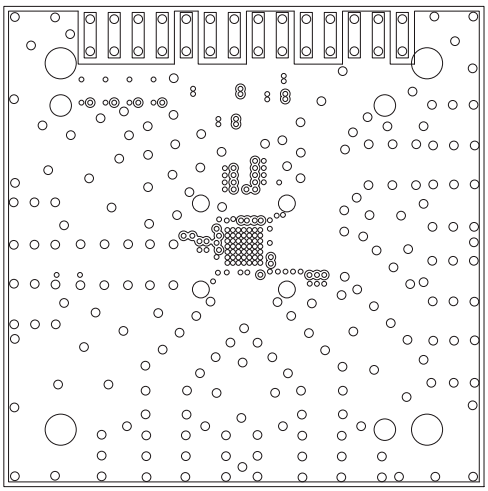

203146D-006

Layer 4: Solid Ground Plane

Figure 7. SKY65366-21 Evaluation Board Layer Detail

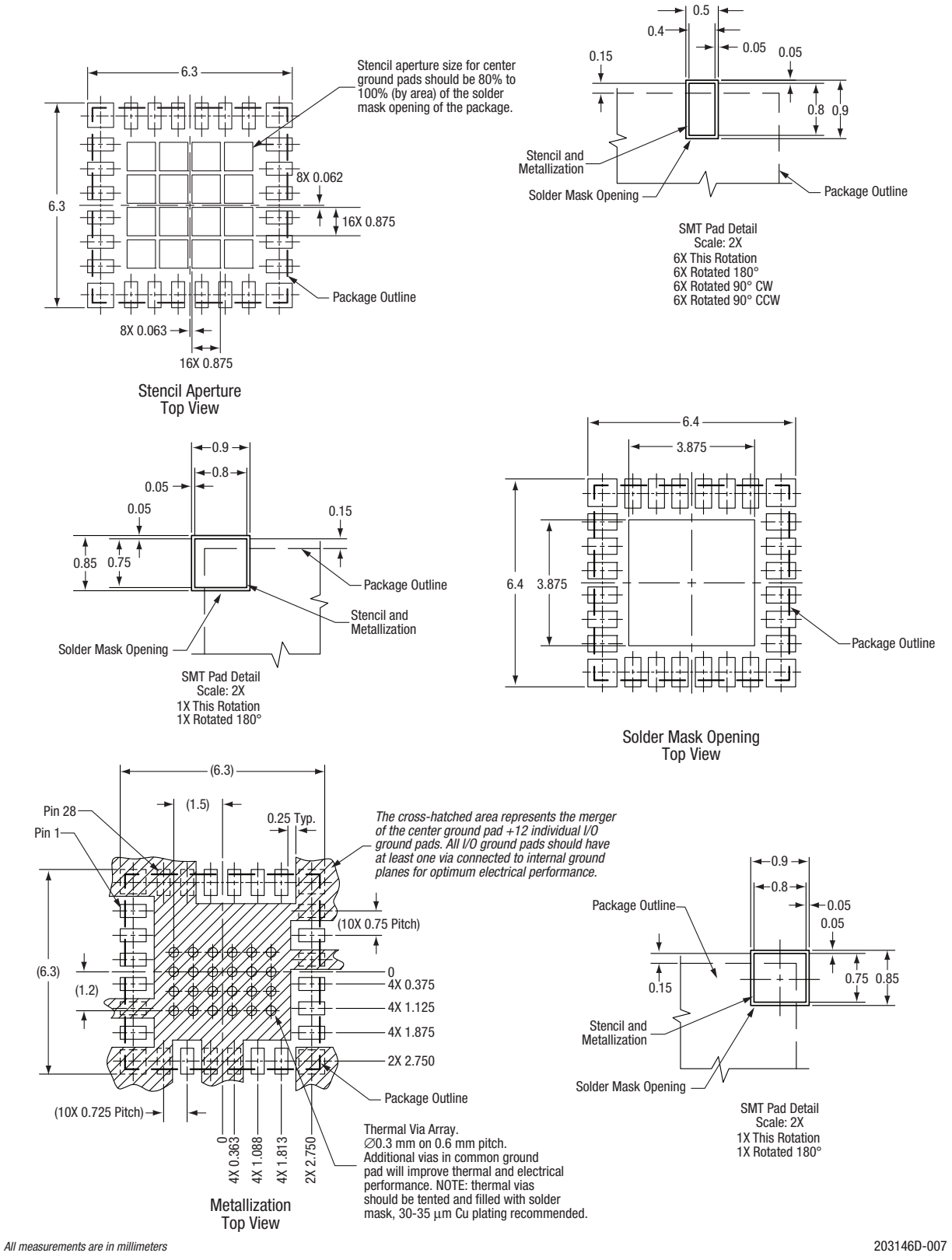

Figure 8. SKY65366-21 PCB Footprint Drawing

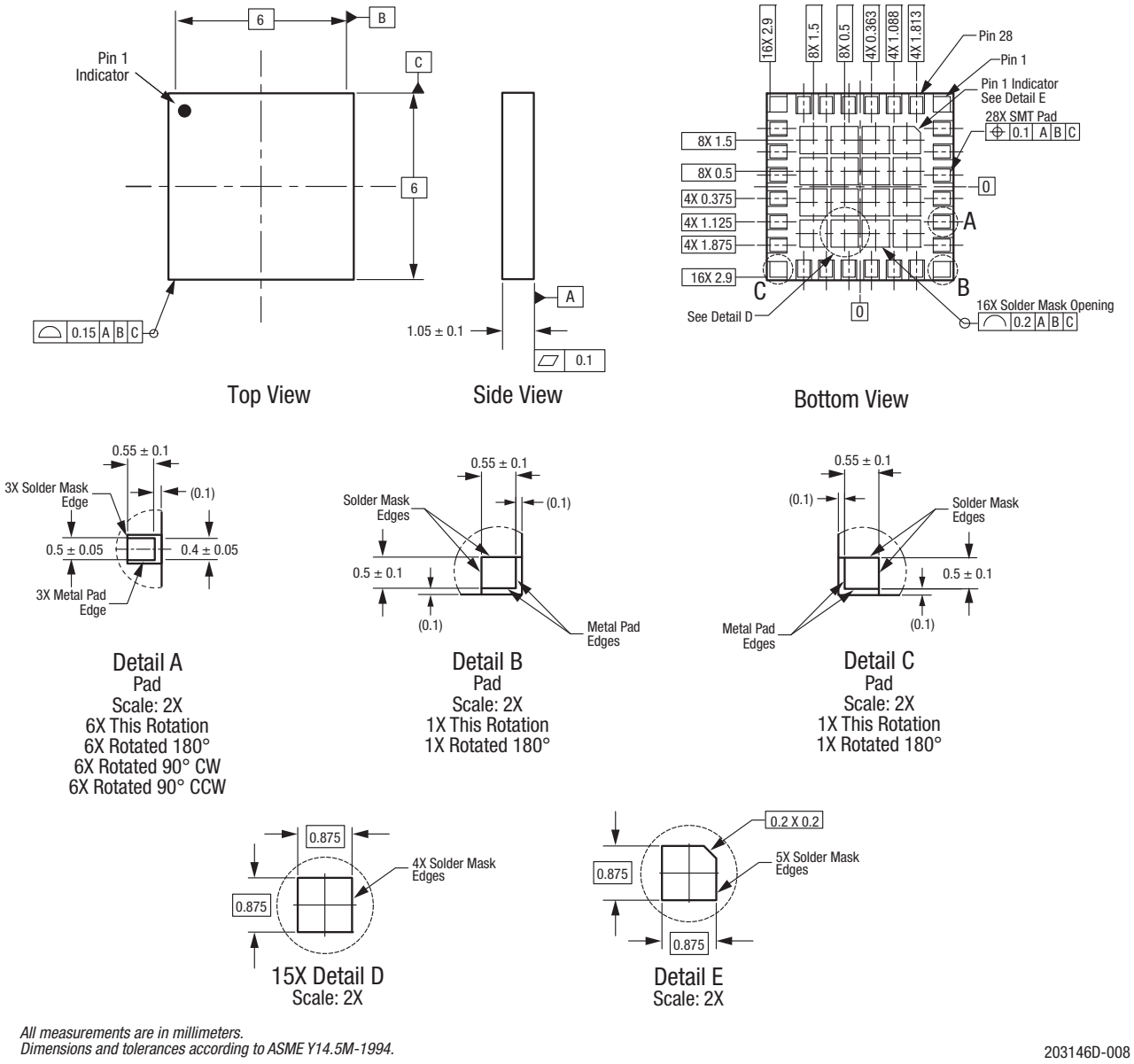

All measurements are in millimeters.
Dimensions and tolerances according to ASME Y14.5M-1994.

203146D-008

Figure 9. SKY65366-21 Package Dimensions

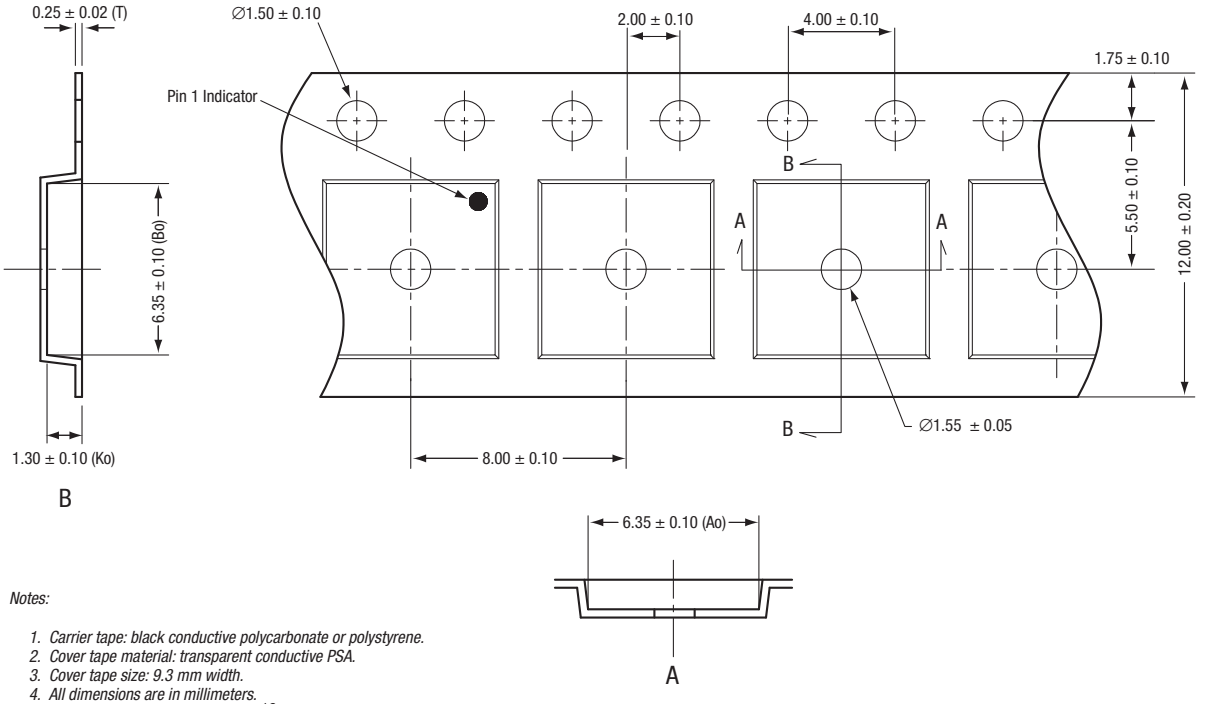

Notes:

1. *Carrier tape: black conductive polycarbonate or polystyrene.*
2. *Cover tape material: transparent conductive PSA.*
3. *Cover tape size: 9.3 mm width.*
4. *All dimensions are in millimeters.*
5. *ESD-surface resistivity is ≤1 x 10^{10} Ohms/square per EIA, JEDEC TNR Specification.*

Figure 10. SKY65366-21 Tape and Reel Dimensions

Ordering Information

Part Number	Product Description	Evaluation Board Part Number
SKY65366-21	400 MHz Transmit/Receive Front-End Module	SKY65366-21-EVB

Copyright © 2020 Skyworks Solutions, Inc. All Rights Reserved.

Information in this document is provided in connection with Skyworks Solutions, Inc. ("Skyworks") products or services. These materials, including the information contained herein, are provided by Skyworks as a service to its customers and may be used for informational purposes only by the customer. Skyworks assumes no responsibility for errors or omissions in these materials or the information contained herein. Skyworks may change its documentation, products, services, specifications or product descriptions at any time, without notice. Skyworks makes no commitment to update the materials or information and shall have no responsibility whatsoever for conflicts, incompatibilities, or other difficulties arising from any future changes.

No license, whether express, implied, by estoppel or otherwise, is granted to any intellectual property rights by this document. Skyworks assumes no liability for any materials, products or information provided hereunder, including the sale, distribution, reproduction or use of Skyworks products, information or materials, except as may be provided in Skyworks Terms and Conditions of Sale.

THE MATERIALS, PRODUCTS AND INFORMATION ARE PROVIDED "AS IS" WITHOUT WARRANTY OF ANY KIND, WHETHER EXPRESS, IMPLIED, STATUTORY, OR OTHERWISE, INCLUDING FITNESS FOR A PARTICULAR PURPOSE OR USE, MERCHANTABILITY, PERFORMANCE, QUALITY OR NON-INFRINGEMENT OF ANY INTELLECTUAL PROPERTY RIGHT; ALL SUCH WARRANTIES ARE HEREBY EXPRESSLY DISCLAIMED. SKYWORKS DOES NOT WARRANT THE ACCURACY OR COMPLETENESS OF THE INFORMATION, TEXT, GRAPHICS OR OTHER ITEMS CONTAINED WITHIN THESE MATERIALS. SKYWORKS SHALL NOT BE LIABLE FOR ANY DAMAGES, INCLUDING BUT NOT LIMITED TO ANY SPECIAL, INDIRECT, INCIDENTAL, STATUTORY, OR CONSEQUENTIAL DAMAGES, INCLUDING WITHOUT LIMITATION, LOST REVENUES OR LOST PROFITS THAT MAY RESULT FROM THE USE OF THE MATERIALS OR INFORMATION, WHETHER OR NOT THE RECIPIENT OF MATERIALS HAS BEEN ADVISED OF THE POSSIBILITY OF SUCH DAMAGE.

Skyworks products are not intended for use in medical, lifesaving or life-sustaining applications, or other equipment in which the failure of the Skyworks products could lead to personal injury, death, physical or environmental damage. Skyworks customers using or selling Skyworks products for use in such applications do so at their own risk and agree to fully indemnify Skyworks for any damages resulting from such improper use or sale.

Customers are responsible for their products and applications using Skyworks products, which may deviate from published specifications as a result of design defects, errors, or operation of products outside of published parameters or design specifications. Customers should include design and operating safeguards to minimize these and other risks. Skyworks assumes no liability for applications assistance, customer product design, or damage to any equipment resulting from the use of Skyworks products outside of stated published specifications or parameters.

Skyworks and the Skyworks symbol are trademarks or registered trademarks of Skyworks Solutions, Inc. or its subsidiaries in the United States and other countries. Third-party brands and names are for identification purposes only, and are the property of their respective owners. Additional information, including relevant terms and conditions, posted at www.skyworksinc.com, are incorporated by reference.