Product Introduction

ZDH1442 is a high-performance transmit/receive (TX/RX) front-end module, which contains a transmit/receive (T/R) path and an antenna T/R switch. The transmit path consists of a high-efficiency power amplifier (PA) and a harmonic filter. A high-linearity and high-isolation single-pole double-throw switch (SPDT) is used for the common antenna interface between the transmit and receive paths. The receive path is a low-insertion-loss pass path, and the input and output ports are internally matched to 50 Ω. ZDH1442 adopts a green lead-free standard 8x8-12 package with good reliability, economy and extremely high cost performance.

Typical application scenarios

- Tetra Radio
- Remote Metering
- GSM450
- WLL

Maximum Ratings

Parameter	Value
Storage temperature	-65°C~+125°C
Operating temperature	-55°C~+125°C
Power supply voltage (VCC)	+4V
Input power	+5dBm
Power supply current	850mA

Functional Block Diagram

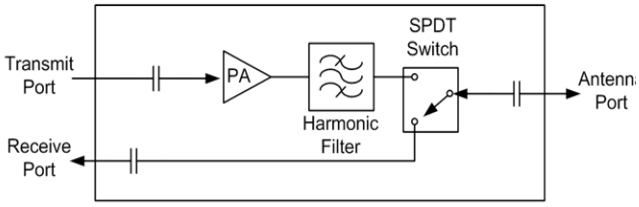

Switch control logic

State	V1 Signal (Pin 9)	V2 Signal (Pin 8)
TX	1	0
RX	0	1

Note: Logic level 0: 0 V to 0.5 V; Logic level 1: 2.0 V to VCC

Features

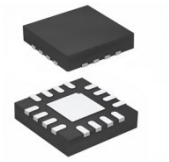

- 3V~4V single voltage supply, typical operating current 650mA @ 3.6V
- Transmit output power: 29dBm
- High transmission gain: 32dB
- High transmit/receive isolation: 30dB
- Internal RF matching and bias circuits
- Green lead-free 12-pin 8x8 package

This product complies with all relevant regulations and is Pb-free.

Pin Diagram (Top View)

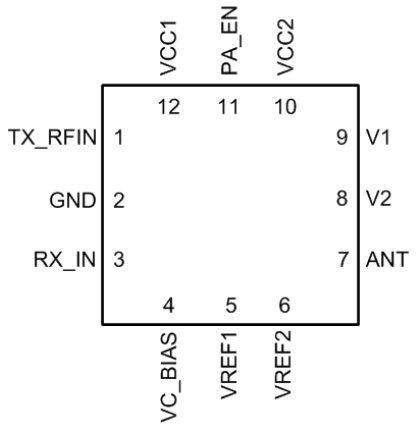

Pin	Name	Description
1	TX_RFIN	Transmit RF Input
2	GND	Ground
3	RX_IN	Receive RF Input
4	VC_BIAS	+3.6 V DC Power Supply
5	VREF1	+3.6 V DC Power Supply
6	VREF2	+3.6 V DC Power Supply
7	ANT	Antenna
8	V2	Switch Control
9	V1	Switch Control
10	VCC2	+3.6 V DC Power Supply
11	PA_EN	PA Enable (On = 2.5-3.6 V, Off = 0-0.2 V)
12	VCC1	+3.6 V DC Power Supply
17	EPAD	Bottom Ground

Recommended operating conditions

Parameter	Minimum	Typical	Maximum	Unit
Supply voltage (VCC1, VCC2, VREF1, VREF2, VC_BIAS)	3.0	3.6	4.0	V
Operating temperature	-40	-	+85	°C
Storage temperature	-55	-	+125	°C

Electrical parameters

Test conditions: VCC1 = VCC2 = VREF1 = VREF2 = VC-BIAS = 3.6V, Temp = +25°C, 460MHz Application Circuit

Parameter	Conditions	Minimum	Typical	Maximum	Unit
Operating frequency range	-	450	-	470	MHz
Transmit path small signal gain	CW, PIN = –30 dBm	30	34.6	-	dB
Transmit saturated output power	CW, PIN = 0 dBm	+28.5	+29.1	-	dBm
Transmit path noise figure	VCC=3.0V,Pout=30dBm	-	5.5	6.5	dB
Transmit path harmonics (2nd to 6th)	CW, PIN = 0 dBm	53	60	-	dBc
CW efficiency	CW, PIN = 0 dBm	31	34	-	%
Receive path insertion loss	-	-	0.6	1.0	dB
Transmit/receive path isolation	CW	27	33	-	dB
Input return loss	-	15	17	-	dB
Output return loss	-	10	15	-	dB
Quiescent current	No RF	-	85	110	mA
Operating current	POUT = +29 dBm	-	650	720	mA
Standby current	No RF input, module in standby mode	-	2	-	μA
Maximum VSWR for stable operation	CW	6:1	8:1	-	-

Typical application circuit

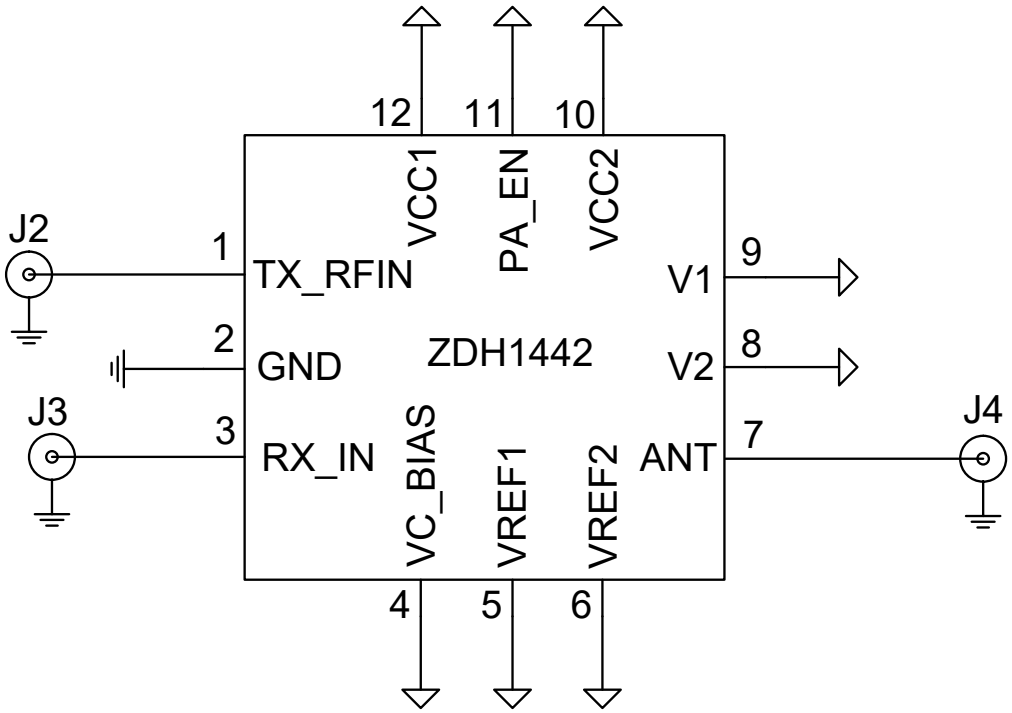

Packaging diagram

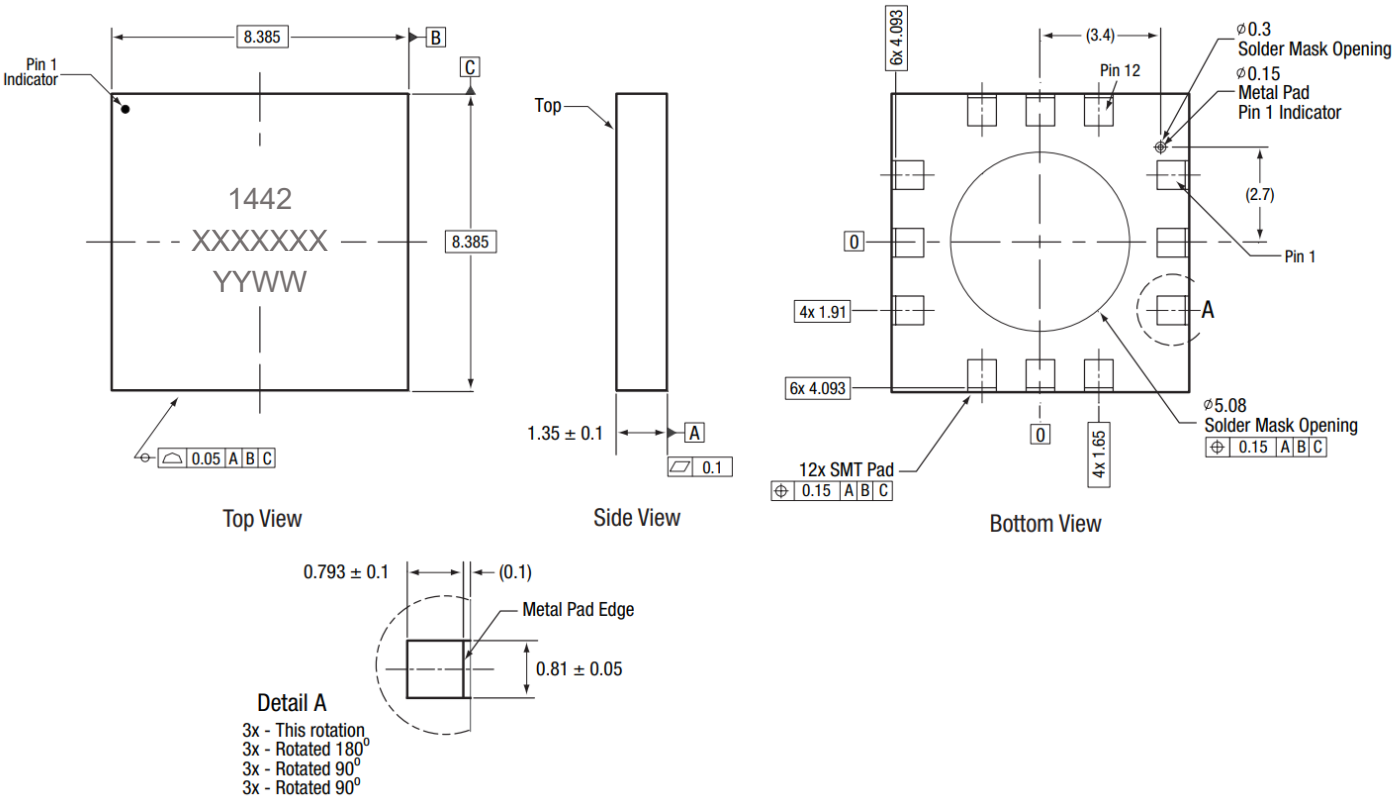

Ordering Information

Model	Marking	Package
ZD1442	1442	8x8-12pin