DATA SHEET

RFX1010: 700 / 800 / 900 MHz 0.5 Watt Broadband CMOS RFeIC

Applications

- North America 900 MHz ISM systems
- Eastern Europe 870 MHz SRD systems
- Smart grid/AMR/AMI
- Smart home appliances
- Remote sensor and control
- Other 700 / 800 / 900 MHz radios

Features

- 700 / 800 / 900 MHz single-chip, single-die RF front-end IC
- Separate TX and RX RF transceiver ports and single antenna port
- 700 / 800 / 900 MHz power amplifier with low-pass harmonic filters
- Low noise amplifier
- Transmit/receive switch circuitry
- High transmit signal linearity meeting standards for OQPSK modulation
- Low voltage (1.2V) CMOS control logic
- ESD protection circuitry on all pins DC grounded RF Ports
- Internal RF decoupling on all VDD bias pins
- Low noise figure for the receive channel
- High-power handling capability for received signals
- Very low DC power consumption
- Full on-chip matching and decoupling circuitry
- Minimal external components required
- 50 Ω input/output matching
- Market-proven low-cost CMOS technology
- Small QFN (16-lead,3.0 x 3.0 x 0.55 mm) package with exposed ground pad

Skyworks Green™ products are compliant with all applicable legislation and are halogen-free. For additional information, refer to *Skyworks Definition of Green™*, document number SQ04-0074.

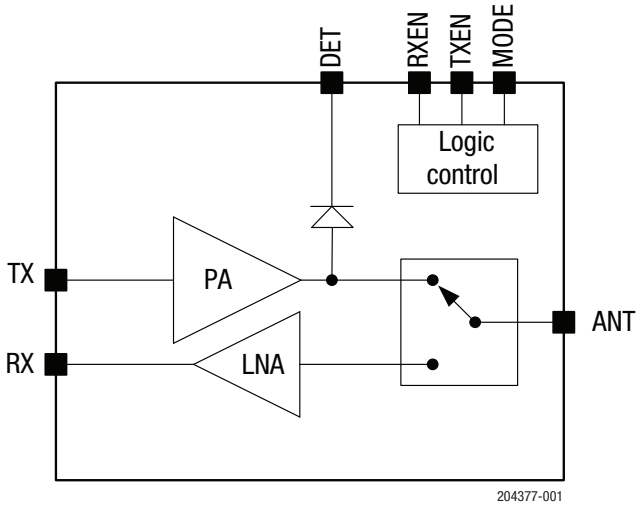

Figure 1. RFX1010 Block Diagram

Description

The RFX1010 is a broadband, fully integrated, single-chip, single-die RFeIC (RF front-end integrated circuit) that incorporates all the RF functionality needed for a TDD-mode RF front-end operated in the 700 / 800 / 900 MHz frequency bands.

The RFX1010 architecture integrates a linear PA, LNA, transmit and receive switching circuitry, associated matching networks, and harmonic filters all in a CMOS single-chip device. The RFX1010 requires minimal external components including the power supply bypass capacitors.

This RFeIC is designed for medium to high output power, and consumes low current in receive mode. The combination of superior output power, high sensitivity and efficiency, low noise, small form factor, and low cost makes the RFX1010 an ideal solution for multiple applications including IEEE 802.15.4, ZigBee®, AMR, smart home area network and other ISM applications in the sub-GHz bands from 780 to 960 MHz. It can also be used for IEEE 802.11p and 802.11ah.

A functional block diagram is shown in Figure 1. The pin configuration and package are shown in Figure 2. Signal pin assignments and functional pin descriptions are provided in Table 1.

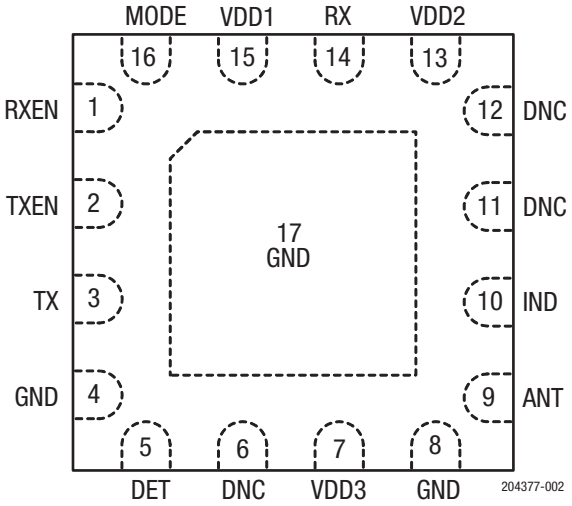

Figure 2. RFX1010 Pinout (Top View)

Table 1. RFX1010 Signal Descriptions

Pin	Name	Description	Pin	Name	Description
1	RXEN	CMOS input to enable receive mode	9	ANT	Common RF port connected to the antenna, DC shorted to ground
2	TXEN	CMOS input to enable transmit mode	10	IND	Port for connecting ANT matching inductor
3	TX	RF TX Signal from the transceiver to the PA: DC shorted to ground	11	DNC	Do not connect (must be left floating in the application circuit)
4	GND	Ground (must be connected to ground in the application circuit)	12	DNC	Do not connect (must be left floating in the application circuit)
5	DET	Analog voltage proportional to the PA power output	13	VDD2	Voltage supply connection for the LNA
6	DNC	Do not connect (must be left floating in the application circuit)	14	RX	RF RX signal from the LNA to the transceiver, DC shorted to ground
7	VDD3	Voltage supply connection for the power stage of PA	15	VDD1	Voltage supply connection for the driver stage of PA
8	GND	Ground (must be connected to ground in the application circuit)	16	MODE	CMOS input to control high gain/low gain for RX

Electrical and Mechanical Specifications

The absolute maximum ratings of the RFX1010 are provided in Table 2. The recommended operating conditions are specified in Table 3.

The DC electrical specifications are provided in Table 4. The TX/RX electrical specifications are provided in Table 5. Figure 3 provides a control signal diagram. The state of the RFX1010 is determined by the logic provided in Table 6.

Table 2. RFX1010 Absolute Maximum Ratings[1]

Parameter	Conditions	Minimum	Maximum	Units
DC VDD voltage supply	All VDD pins	0	4.2	V
DC control pin voltage		0	3.6	V
TX RF input power			+7	dBm
ANT RF input power	When RX is ON		+5	dBm
Junction temperature			+150	°C
Storage ambient temperature	No RF and DC voltages applied. Appropriate care required according to JEDEC Standards	–50	+150	°C

1 Exposure to maximum rating conditions for extended periods may reduce device reliability. There is no damage to device with only one parameter set at the limit and all other parameters set at or below their nominal value. Exceeding any of the limits listed here may result in permanent damage to the device. All maximum RF input power ratings assume 50 Ω terminal impedance.

***ESD HANDLING**: Although this device is designed to be as robust as possible, electrostatic discharge (ESD) can damage this device. This device must be protected at all times from ESD when handling or transporting. Static charges may easily produce potentials of several kilovolts on the human body or equipment, which can discharge without detection. Industry-standard ESD handling precautions should be used at all times.*

Table 3. RFX1010 Recommended Operating Conditions[1]

Parameter	Conditions	Minimum	Typical	Maximum	Units
DC VDD voltage supply[1]	All VDD pins	2.7	3.3	3.6	V
Control voltage high	RXEN, TXEN, and MODE pins	1.2		VDD	V
Control voltage low	RXEN, TXEN, and MODE pins			0.3	V
Ambient operating temperature	See note 2	-40		+125	ºC
θja	See note 2		38		ºC/W

1 For normal operation of the RFX1010, VDD must be continuously applied to all VDD supply pins.

2 For operation above +85 ºC, use the θja as guidance for system design to assure the junction temperature will not exceed the maximum of +150 ºC.

Table 4. RFX1010 DC Characteristics (VDD = 3.3 V; T = +25 °C)

Parameter	Conditions	Minimum	Typical	Maximum	Units
DC control pin current consumption	RXEN, TXEN, and MODE pins		0.1		µA
DC shutdown current			1		µA
Transmit-receive switching time				1	usec
Shutdown and ON state switching time				1	usec

Table 5. RFX1010 Electrical Characteristics (VDD = 3.3 V, T_A = +25°C, Unless Otherwise Specified)

Parameter	Test Condition	Min	Typical	Max	Units
Transmit Mode					
Operating frequency band[1]	All RF Pins Loaded by 50 Ω	780		960	MHz
Saturated output power	In band	+26	+27		dBm
Linear output power	For 3% EVM, 802.11ah, 4 MHz/64 QAM		+16		dBm
Large signal gain	P_{OUT} = +27 dBm		+28		dB
Large signal current	P_{OUT} = +27 dBm, burst, 10% duty cycle		350		mA
Quiescent current			40		mA
Second harmonic	P_{OUT} = +27 dBm		–32		dBc
Third harmonic	P_{OUT} = +27 dBm		–22		dBc
Input return loss (S11)			–10		dB
Input/output impedance single-ended			50		Ω
Power detector voltage	P_{OUT} = +5 to +27 dBm, 10 kΩ load	200		1800	mV
VSWR for stability	For all non-harmonic related spurs below -42 dBm/MHz, P_{IN} fixed for P_{OUT}=+27 dBm with 50 Ω load		6:1		
VSWR for ruggedness	No damage, P_{IN} <= +5 dBm		10:1		
Receive Mode					
Operating frequency band	All RF pins are loaded by 50 Ω	780		960	MHz
Gain	High-gain mode		14		dB
	Low-gain mode		12		
Noise figure	High-gain mode		3		dB
	Low-gain mode		3.5		
Input return loss (11)	At ANT pin		–10		dB
Output return loss (S22)	At RX pin		–10		dB
RF port impedance	At RX and ANT pins		50		Ω
DC current	P_{OUT} < –10 dBm, high-gain mode		16		mA
	P_{OUT} < –10 dBm, low-gain mode		10		mA
Input P_{1dB}	High-gain mode		–5		dBm
	Low-gain mode		–5		

[1] Matching component will vary for different frequency bands.

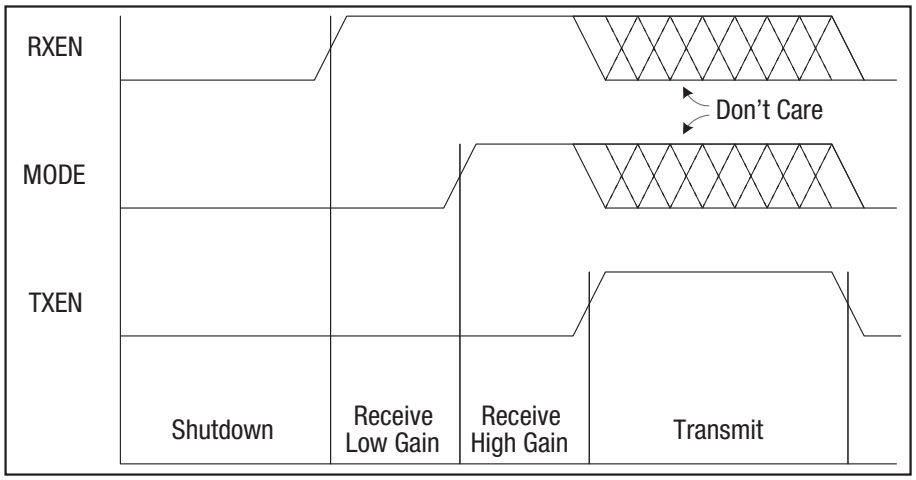

204377-003

Figure 3. RFX1010 Control Signal Diagram

Table 6. RFX1010 Control Logic[1]

Operating Conditions	TXON	RXON	MODE
Shutdown	0	0	X
RX active, low-gain mode	0	1	0
RX active, high-gain mode	0	1	1
TX active	1	X	X

1 "1" denotes high voltage state (> 1.2 V)
"0" denotes low voltage stage (< 0.3 V) at control pins
"X" denotes do not care: floating control pins not allowed

Evaluation Board Description

The RFX1010 Evaluation Board is used to test the performance of the RFX1010 device. An Evaluation Board schematic diagram for 915 MHz appliction is provided in Figure 4. An example of the Evaluation Board schematic with no filter is shown in Figure 5.

A photograph of the Evaluation Board assembly is provided in Figure 6.

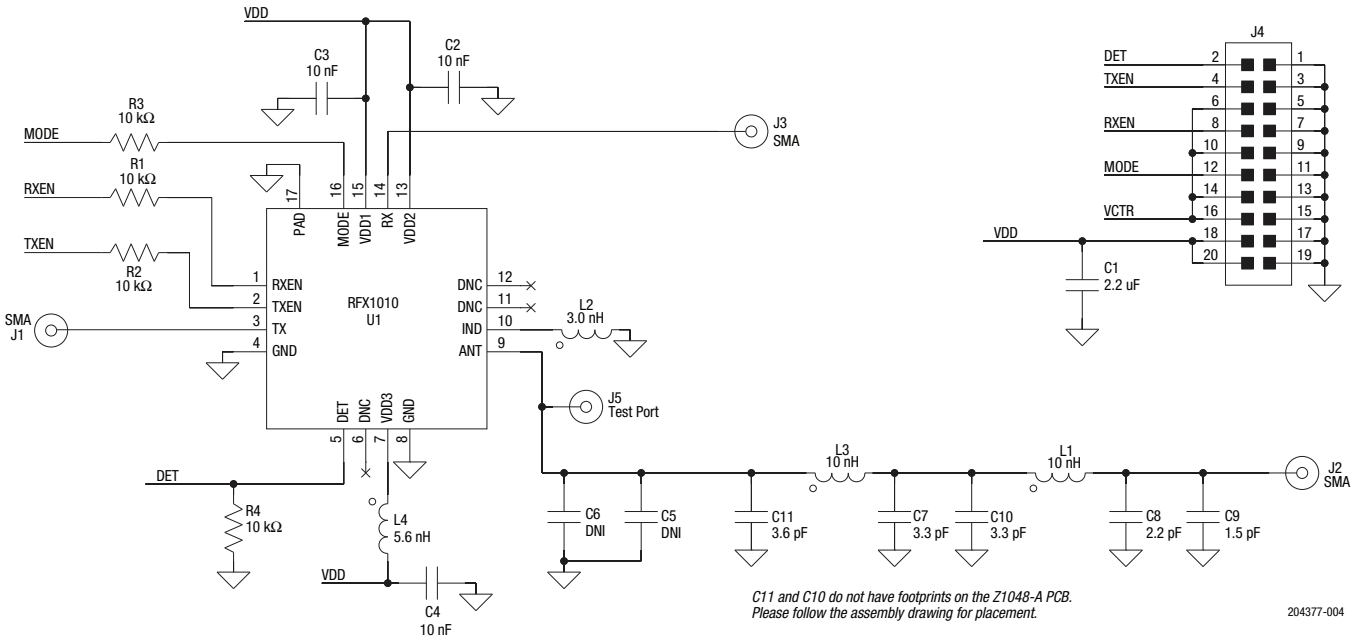

Figure 4. Evaluation Board Schematic for 915 MHz Application and FCC Conducted Harmonics Rejection Compliant

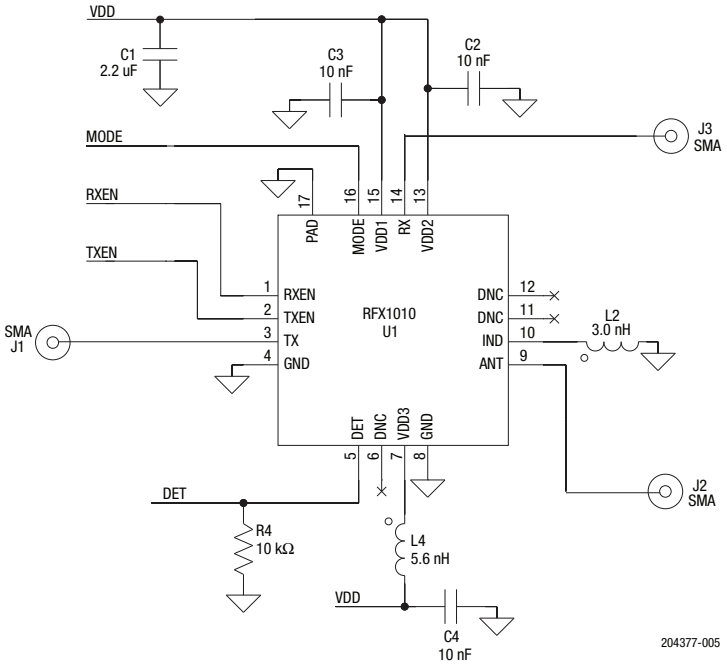

Note: For best harmonic rejection, please connect pin 8 to the center ground paddle in the PCB layout.

Figure 5. Example of the RFX1010 Evaluation Board Schematic with No Filter

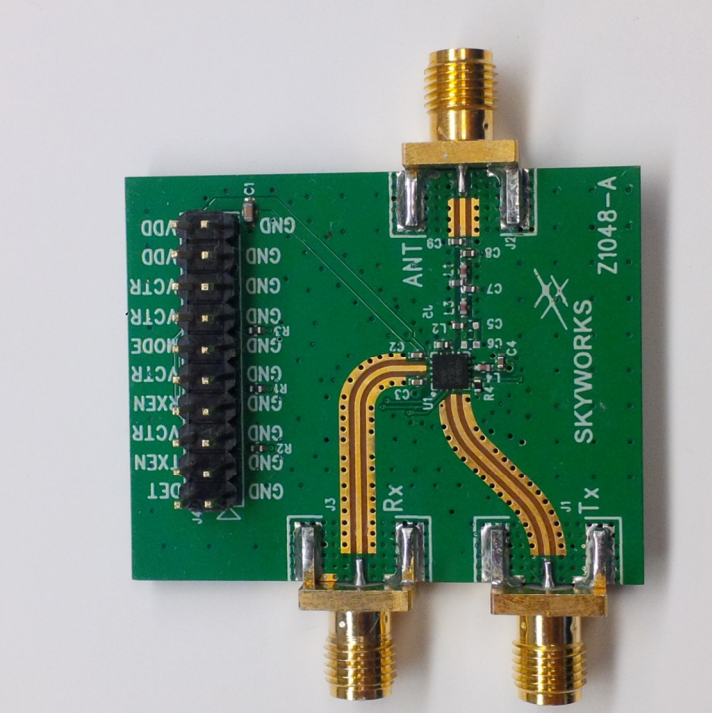

Figure 6. RFX1010 Evaluation Board

Package Dimensions

The typical part marking is shown in Figure 7. The suggested land pattern is shown in Figure 8. Package dimensions are shown in Figure 9. Tape and reel dimensions are provided in Figure 10.

Package and Handling Information

Instructions on the shipping container label regarding exposure to moisture after the container seal is broken must be followed. Otherwise, problems related to moisture absorption may occur when the part is subjected to high temperature during solder assembly.

The RFX1010 is rated to Moisture Sensitivity Level 1 (MSL1) at 260 °C. It can be used for lead or lead-free soldering. For additional information, refer to the Skyworks Application Note, *Solder Reflow Information*, document number 200164.

Care must be taken when attaching this product, whether it is done manually or in a production solder reflow environment. Production quantities of this product are shipped in a standard tape and reel format.

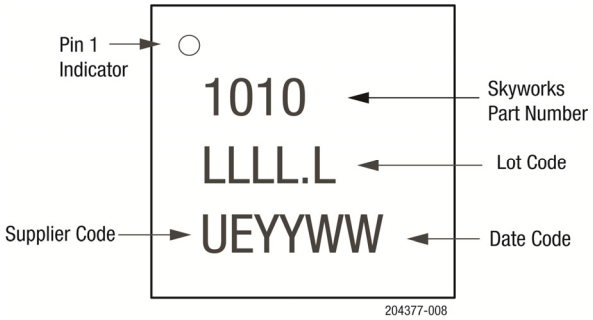

Figure 7. Typical Part Markings (Top View)

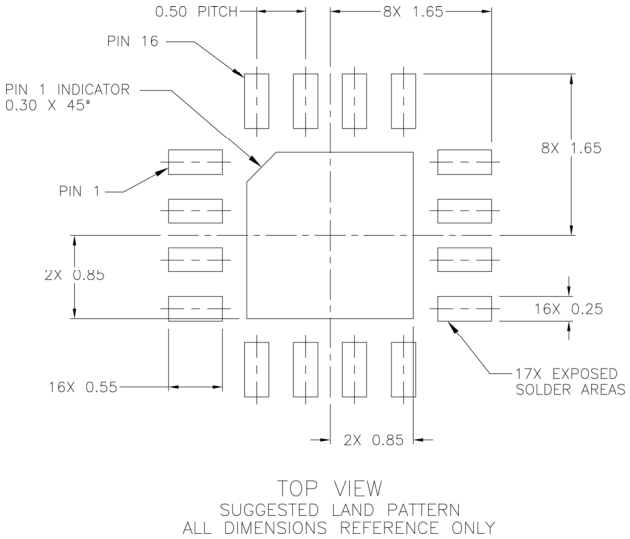

Figure 8. RFX1010 Suggested Land Pattern

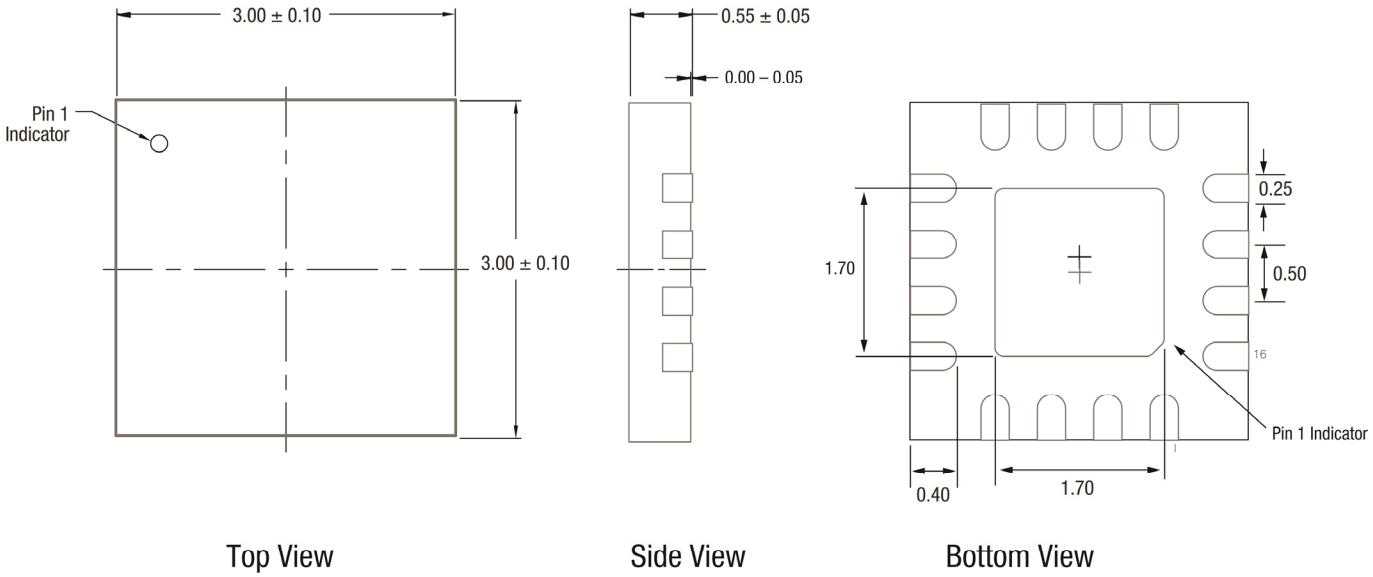

All dimensions are in millimeters.

Figure 9. RFX1010 Package Dimensions

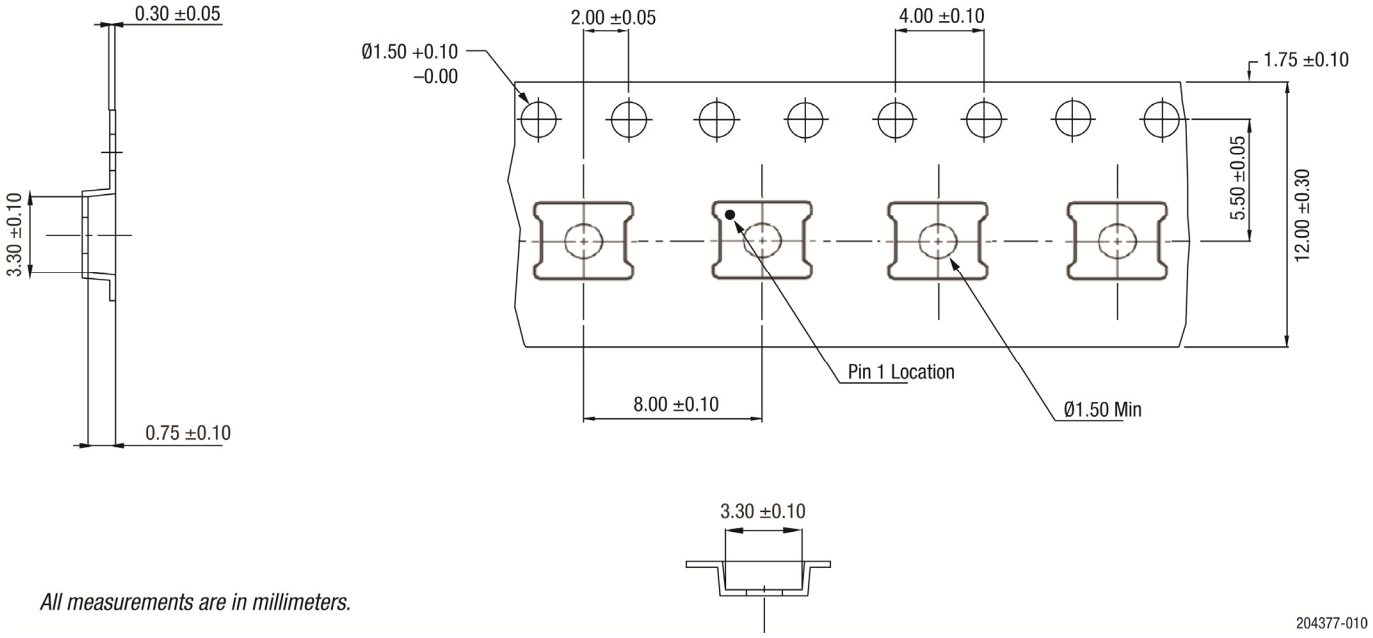

All measurements are in millimeters.

Figure 10. RFX1010 Tape and Reel Dimensions

Ordering Information

Part Number	Product Description	Evaluation Board Part Number
RFX1010	900 MHz CMOS RFeIC	RFX1010-EK1
RFX1010	800 MHz CMOS RFeIC	RFX1010-EK2

Copyright © 2016, 2020 Skyworks Solutions, Inc. All Rights Reserved.

Information in this document is provided in connection with Skyworks Solutions, Inc. (“Skyworks”) products or services. These materials, including the information contained herein, are provided by Skyworks as a service to its customers and may be used for informational purposes only by the customer. Skyworks assumes no responsibility for errors or omissions in these materials or the information contained herein. Skyworks may change its documentation, products, services, specifications or product descriptions at any time, without notice. Skyworks makes no commitment to update the materials or information and shall have no responsibility whatsoever for conflicts, incompatibilities, or other difficulties arising from any future changes.

No license, whether express, implied, by estoppel or otherwise, is granted to any intellectual property rights by this document. Skyworks assumes no liability for any materials, products or information provided hereunder, including the sale, distribution, reproduction or use of Skyworks products, information or materials, except as may be provided in Skyworks Terms and Conditions of Sale.

THE MATERIALS, PRODUCTS AND INFORMATION ARE PROVIDED “AS IS” WITHOUT WARRANTY OF ANY KIND, WHETHER EXPRESS, IMPLIED, STATUTORY, OR OTHERWISE, INCLUDING FITNESS FOR A PARTICULAR PURPOSE OR USE, MERCHANTABILITY, PERFORMANCE, QUALITY OR NON-INFRINGEMENT OF ANY INTELLECTUAL PROPERTY RIGHT; ALL SUCH WARRANTIES ARE HEREBY EXPRESSLY DISCLAIMED. SKYWORKS DOES NOT WARRANT THE ACCURACY OR COMPLETENESS OF THE INFORMATION, TEXT, GRAPHICS OR OTHER ITEMS CONTAINED WITHIN THESE MATERIALS. SKYWORKS SHALL NOT BE LIABLE FOR ANY DAMAGES, INCLUDING BUT NOT LIMITED TO ANY SPECIAL, INDIRECT, INCIDENTAL, STATUTORY, OR CONSEQUENTIAL DAMAGES, INCLUDING WITHOUT LIMITATION, LOST REVENUES OR LOST PROFITS THAT MAY RESULT FROM THE USE OF THE MATERIALS OR INFORMATION, WHETHER OR NOT THE RECIPIENT OF MATERIALS HAS BEEN ADVISED OF THE POSSIBILITY OF SUCH DAMAGE.

Skyworks products are not intended for use in medical, lifesaving or life-sustaining applications, or other equipment in which the failure of the Skyworks products could lead to personal injury, death, physical or environmental damage. Skyworks customers using or selling Skyworks products for use in such applications do so at their own risk and agree to fully indemnify Skyworks for any damages resulting from such improper use or sale.

Customers are responsible for their products and applications using Skyworks products, which may deviate from published specifications as a result of design defects, errors, or operation of products outside of published parameters or design specifications. Customers should include design and operating safeguards to minimize these and other risks. Skyworks assumes no liability for applications assistance, customer product design, or damage to any equipment resulting from the use of Skyworks products outside of stated published specifications or parameters.

Skyworks and the Skyworks symbol are trademarks or registered trademarks of Skyworks Solutions, Inc. or its subsidiaries in the United States and other countries. Third-party brands and names are for identification purposes only, and are the property of their respective owners. Additional information, including relevant terms and conditions, posted at www.skyworksinc.com, are incorporated by reference.