DATA SHEET

SE2435L: 860 to 930 MHz High-Power RF Front-End Module

Applications

- Internet of Things
- Smart meters
- In-home appliances
- Smart thermostats
- Industrial applications

Features

- Integrated PA with +30 dBm output power
- Integrated LNA with programmable bypass
- Integrated antenna switching with transmit/receive diversity function
- Low FEM noise figure of 2 dB, typical
- Single-ended 50 Ω transmit/receive RF interface
- Fast turn-on/turn-off time: < 1 µsec
- Supply voltage: 2.0 to 4.8 V
- Sleep mode current: < 1 µA
- QFN (24-pin, 4 x 4 x 0.9 mm) NiPdAu plated package (MSL1, 260 °C per JEDEC J-STD-020)

Skyworks Green™ products are compliant with all applicable legislation and are halogen-free. For additional information, refer to *Skyworks Definition of Green™*, document number SQ04-0074.

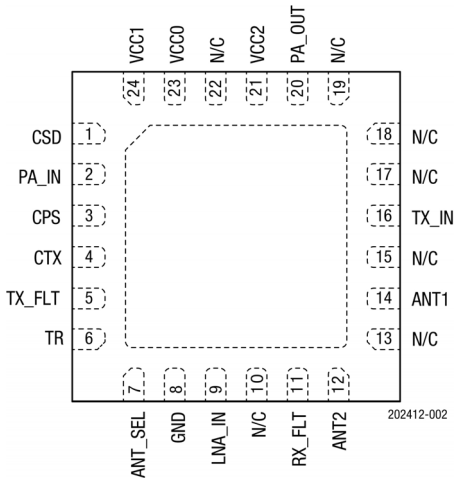

Figure 2. SE2435L Pinout (Top View)

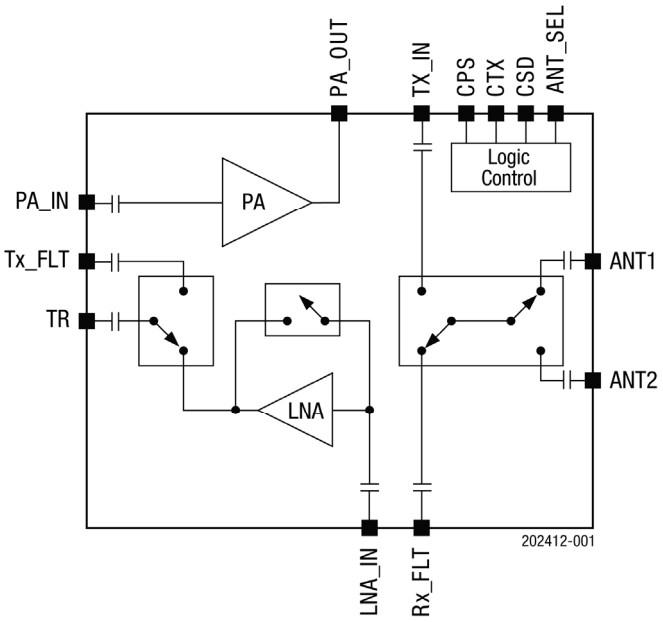

Figure 1. SE2435L Block Diagram

Description

The SE2435L is a high-performance, highly integrated RF front-end module designed for high-power Industrial, Scientific, Medical (ISM) band applications operating in the 860 to 930 MHz frequency range.

The SE2435L is designed for ease of use and maximum flexibility with fully matched 50 Ω TX and RX inputs and antenna outputs, and digital controls compatible with 1.6 to 3.6 V CMOS levels.

The RF blocks operate over a wide supply voltage range from 2.0 to 4.8 V allowing the SE2435L to be used in battery powered applications over a wide spectrum of the battery discharge curve.

The SE2435L is packaged in a 24-pin, 4 x 4 mm Quad Flat No-Lead (QFN) package.

A functional block diagram of the SE2435L is provided in Figure 1. Figure 2 shows the pinout for the SE2435L. Table 1 lists the pin assignments and signal descriptions.

Table 1. SE2435L Signal Descriptions

Pin	Name	Description	Pin	Name	Description
1	CSD	Shutdown control input	14	ANT1	Antenna port 1
2	PA_IN	PA input (from Tx filter)	15	N/C	Not connected internally to the device
3	CPS	Rx path select control input	16	TX_IN	Tx signal to antennas (from OMN)
4	CTX	Transmit enable control input	17	N/C	Not connected internally to the device
5	TX_FLT	Transmit signal (to Tx filter)	18	N/C	Not connected internally to the device
6	TR	Bi-directional RF signal to/from transceiver	19	N/C	Not connected internally to the device
7	ANT_SEL	Antenna select control input	20	PA_OUT	PA output (to Z optimum)[1]
8	GND	Ground	21	VCC2	Positive power supply
9	LNA_IN	LNA input (from Rx filter)	22	N/C	Not connected internally to the device
10	N/C	Not connected internally to the device	23	VCC0	Positive power supply
11	RX_FLT	Rx signal from antennas (to Rx filter)	24	VCC1	Positive power supply
12	ANT2	Antenna port 2	Paddle	GND	Exposed die paddle; electrical and thermal ground. Connect to PCB ground
13	N/C	Not connected internally to the device			

[1] Z optimum = 5 Ω for +30 dBm or 8 Ω for +27 dBm P_{OUT}.

Electrical and Mechanical Specifications

Table 2 provides the absolute maximum ratings, and Table 3 shows the recommended operating conditions.

Electrical specifications are provided in Tables 4 through 9. Typical performance characteristics are shown in Figures 3 through 8.

Table 2. SE2435L Absolute Maximum Ratings[1]

Parameter	Symbol	Minimum	Maximum	Units
Supply voltage (no RF)	V_{CC}	-0.3	5.5	V
Operating temperature	T_A	-40	85	°C
Storage temperature	T_{STG}	-40	125	°C
Tx input power at TR port	$P_{IN_TX_MAX}$		+10	dBm
Rx input power at ANT1 or ANT2 ports	$P_{IN_RX_MAX}$		+10	dBm
Electrostatic discharge:	ESD			
Human Body Model (HBM), Class 1C			1000	V

[1] Exposure to maximum rating conditions for extended periods may reduce device reliability. There is no damage to device with only one parameter set at the limit and all other parameters set at or below their nominal value. Exceeding any of the limits listed here may result in permanent damage to the device.

***ESD HANDLING**: Although this device is designed to be as robust as possible, electrostatic discharge (ESD) can damage this device. This device must be protected at all times from ESD when handling or transporting. Static charges may easily produce potentials of several kilovolts on the human body or equipment, which can discharge without detection. Industry-standard ESD handling precautions should be used at all times.*

Table 3. SE2435L Recommended Operating Conditions

Parameter	Symbol	Min	Typ	Max	Units
Supply voltage on VCC	V_{CC}	2.0	4.0	4.8	V
Ambient temperature	T_A	-40	+25	+85	°C

Table 4. SE2435L DC Electrical Specifications[1]
(V_{CC} = 4.0 V, f = 915 MHz, T_A = +25 °C, Unless Otherwise Noted)

Parameter	Symbol	Test Condition	Min	Typ	Max	Units
Total supply current, transmit mode	$I_{CC_TX}30$ $I_{CC_TX}27$ $I_{CC_TX}24$	P_{OUT} = +30 dBm P_{OUT} = +27 dBm P_{OUT} = +24 dBm		550 380 275		mA mA mA
Total supply current, receive mode	I_{CC_RX}			6		mA
Total supply current, receive bypass mode	I_{CC_RXB}				280	µA
Quiescent current	I_{CQ_TX}	No RF		50		mA
Sleep supply current	I_{CC_OFF}	No RF		0.05	1.00	µA

1 Performance is guaranteed only under the conditions listed in this table.

Table 5. SE2435L Electrical Specifications: Control Logic Characteristics[1]
(T_A = +25 °C, Unless Otherwise Noted)

Parameter	Symbol	Test Condition	Min	Typ	Max	Units
Control voltage:						
High	V_{IH}		1.6		Vcc[2]	V
Low	V_{IL}		0		0.3	V
Input current:						
High	I_{IH}				1	µA
Low	I_{IL}				1	µA

1 Performance is guaranteed only under the conditions listed in this table.

2 For Pin 7, ANT_SEL, the maximum is 3.6 V.

Table 6. SE2435L Electrical Specifications: Mode Control Logic (T_A = +25) [1]

Mode	CPS	CSD	CTX	ANT_SEL
Sleep (all off)	0	0	0	X
Receive or transmit bypass	0	1	0	X
Receive LNA mode	1	1	0	X
Transmit	X	1	1	X
ANT1 port enabled	X	X	X	0
ANT2 port enabled	X	X	X	1

1 "1" = 1.6 to Vcc, "0" = 0 to 0.3 V, "X" = don't care.

Table 7. SE2435L Electrical Specifications: AC Transmit Mode
(V_{CC} = 4 V, T_A = +25 °C, All Unused Ports Terminated at 50 Ω, Unless Otherwise Noted. Input Port TR, Output Ports ANT1 and ANT2 Lumped Elements Filter Connected between the TX_FLT and PA_IN Pins)

Parameter	Symbol	Test Condition	Min	Typ	Max	Units
Frequency range	f		860		930	MHz
Output power at ANT1 or ANT2 ports in the 900 to 930 MHz frequency range[1]	P_{OUT}_915	V_{CC} = 4.8 V V_{CC} = 4.0 V V_{CC} = 3.6 V V_{CC} = 3.0 V		+31.5 +30.5 +29.5 +28.0		dBm dBm dBm dBm
Output power at ANT1 or ANT2 ports in the 860 to 870 MHz frequency range[2]	P_{OUT}_860	V_{CC} = 4.0 V V_{CC} = 3.6 V V_{CC} = 3.0 V V_{CC} = 2.0 V		+27 +24 +21 +18		dBm dBm dBm dBm
PA power added efficiency	PAE_PA	P_{OUT} = +28 dBm at PA_OUT port, 915 MHz		64		%
Small signal gain[1]	S_{21_915}	900 to 930 MHz	26			dB
Small signal gain[2]	S_{21_860}	860 to 870 MHz	26			dB
Small signal gain variation[1, 2]	ΔS_{21}	Gain variation across frequency range			2	dBp-p
Output return loss[1, 2]	$S22_{ANT1,2}$	Into 50 Ω, ANT1 and ANT2 ports		-10	-6	dB
2nd harmonic[1, 3]	2fo	P_{OUT} = +30 dBm			-22	dBc
3rd to 10th harmonic[1, 3]	3fo to 10fo	P_{OUT} = +30 dBm			-72	dBc
Turn-on time[4]	t_{ON}				1	µs
Turn-off time	t_{OFF}				1	µs
Stability	STAB	CW, P_{IN} = 0 dBm 0.1 GHz to 20 GHz load VSWR = 6:1	All non-harmonically related outputs less than -43 dBm			
Ruggedness	RU	CW, P_{OUT} = +30 dBm into 50 Ω, load VSWR = 10:1	No permanent damage			

1 900 to 930 MHz with specified matching network on the Evaluation Board.
2 860 to 870 MHz with specified matching network on the Evaluation Board.
3 Measured with continuous wave signal.
4 From 50% of CTX edge to 90% of final RF output power.

Table 8. SE2435L Electrical Specifications: AC Receive Mode
(V_{CC} = 4 V, T_A = +25 °C, f = 900 to 930 MHz and 860 to 870 MHz, All Unused Ports Terminated at 50 Ω, Unless Otherwise Noted. Input Port ANT1 or ANT2, Output Port TR. 0 Ω Connected between the RX_FLT and LNA_IN Pins in lieu of External Filters)

Parameter	Symbol	Test Condition	Min	Typ	Max	Units
Frequency range	f_{IN}		860		930	MHz
Receive gain	R_{X_GAIN}		14	16	18	dB
Receive noise figure	NF			2	2.5	dB
Input third order intercept	IIP3		-5	-2		dBm
Input 1-dB compression point	IP1dB		-15	-12		dBm
Antenna port return loss	$S11_{ANT1,2}$	Into 50 Ω, ANT1 and ANT2 ports		-12	-8	dB
Turn-on time[1]	t_{ON}				1	µs
Turn-off time[2]	t_{OFF}				1	µs
Gain in bypass mode	G_bp		-3	-2		dB
Input 1-dB compression point in bypass mode	IP1dB		+10			dBm

1 From 50% of CTX edge to 90% of final RF output power.

2 From 50% of CTX edge to 10% of final RF output power.

Table 9. SE2435L DC Electrical Specifications: Diversity Antenna Function
(V_{CC} = 4 V, T_A = +25 °C, f = 900 to 930 MHz and 860 to 870 MHz, All Unused Ports Terminated at 50 Ω, Unless Otherwise Noted)

Parameter	Symbol	Min	Typ	Max	Units
Isolation between ANT1 and ANT2 ports	$ISOL_{ANTSW}$		-20		dB
Insertion loss from TX_IN to ANT1	T_{X_ANT1}		0.8		dB
Insertion loss from TX_IN to ANT2	T_{X_ANT2}		0.8		dB
Insertion loss from ANT1 to RX_FLT	R_{X_ANT1}		0.6		dB
Insertion loss from ANT2 to RX_FLT	R_{X_ANT2}		0.6		dB
Insertion loss from TR to TX_FLT	TxRx_Tx		0.5		dB
ANT1 to ANT2 switching time transmit mode	$T_{ANT1-ANT1_TX}$		800		ns
ANT1 to ANT2 switching time receive mode	$T_{ANT1-ANT2_RX}$		400		ns

Typical Performance Characteristics[1]

(V_{CC} = 4 V, T_A = +25 °C, f = 900 to 930 MHz, All Unused Ports Terminated at 50 Ω, Unless Otherwise Noted)

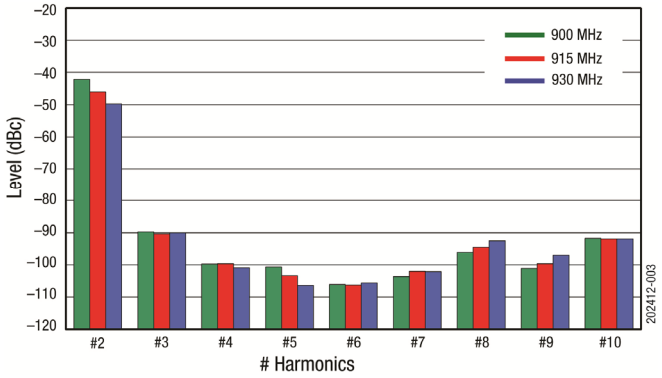

Figure 3. Typical Harmonics Level at +30 dBm P_{OUT} (including Antenna Filter)

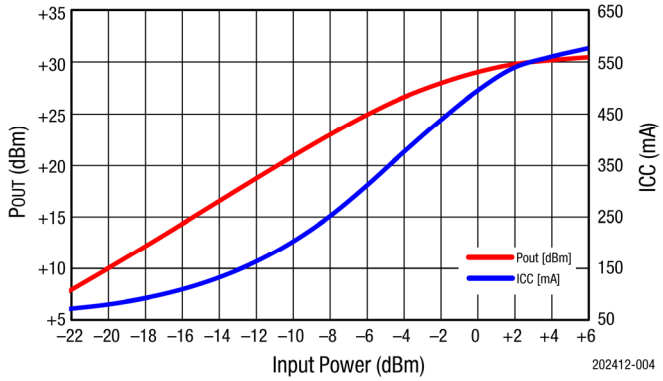

Figure 4. Typical P_{OUT} and I_{CC} Transfer Characteristics

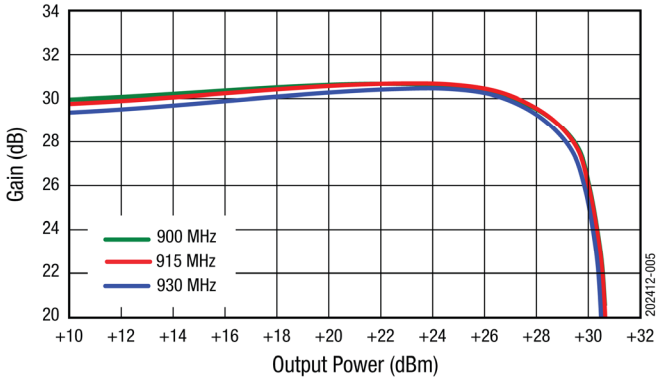

Figure 5. Typical Gain vs P_{OUT} (V_{CC} = 4 V)

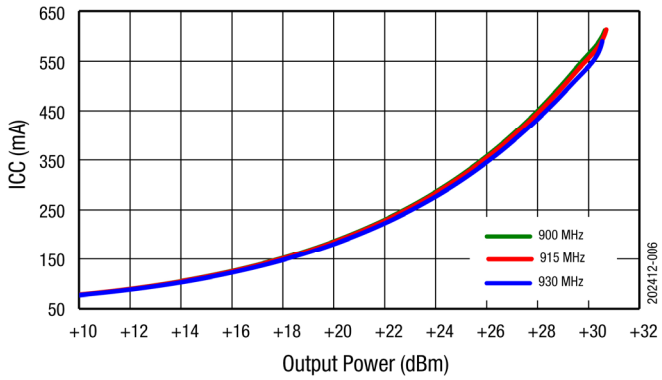

Figure 6. Typical I_{CC} vs P_{OUT} (V_{CC} = 4 V)

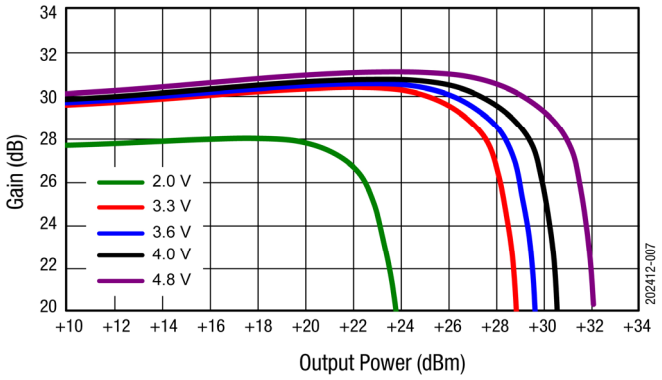

Figure 7. Typical Gain vs P_{OUT} (V_{CC} = 2.0 to 4.8 V)

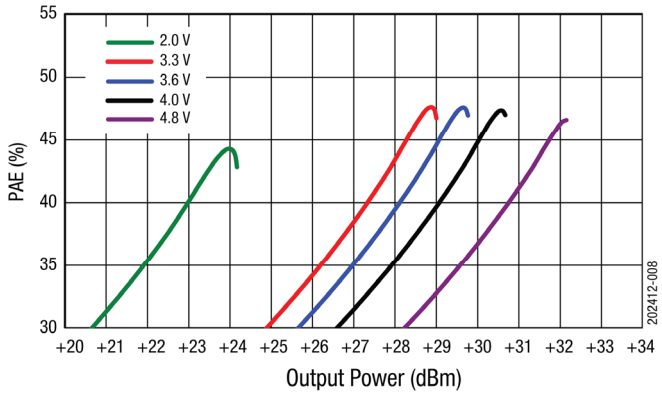

Figure 8. Typical PAE vs P_{OUT} & V_{CC}, CW (V_{CC} = 2.0 to 4.8 V) (including OMN and Antenna Filter Losses)

Note 1: Typical performance graphs at 868 MHz are available upon request (+24, +27, and +30 dBm P_{OUT}).

Evaluation Board Description

The SE2435L-EK1 Evaluation is to demonstrate the performance of the SE2435L Front-End Module. It is optimized for evaluation, experimentation and investigation, using CW (continuous wave) signals.

Figure 9 shows the Evaluation Board. The Evaluation Board schematic diagram is provided in Figure 10. The Bill of Materials (BOM) for the SE2435L Evaluation Board is listed in Table 10.

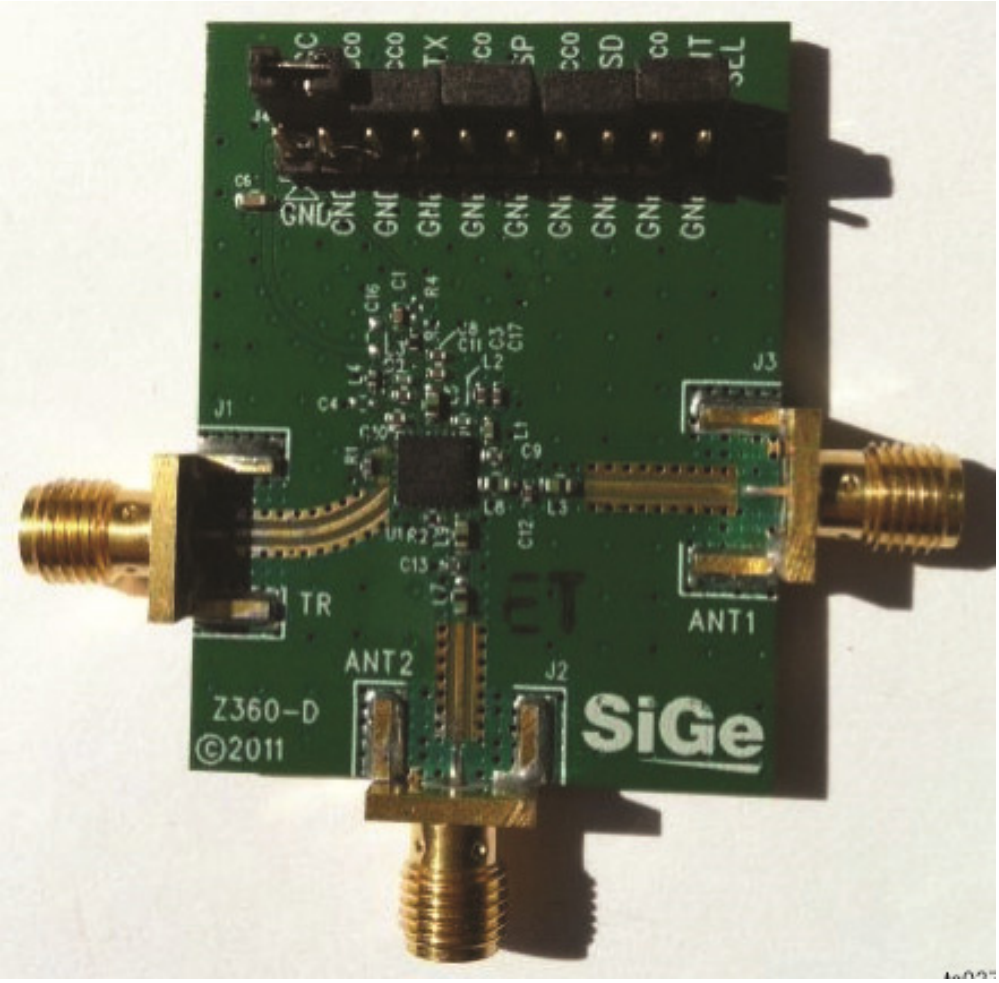

Figure 9. SE2435L Evaluation Board

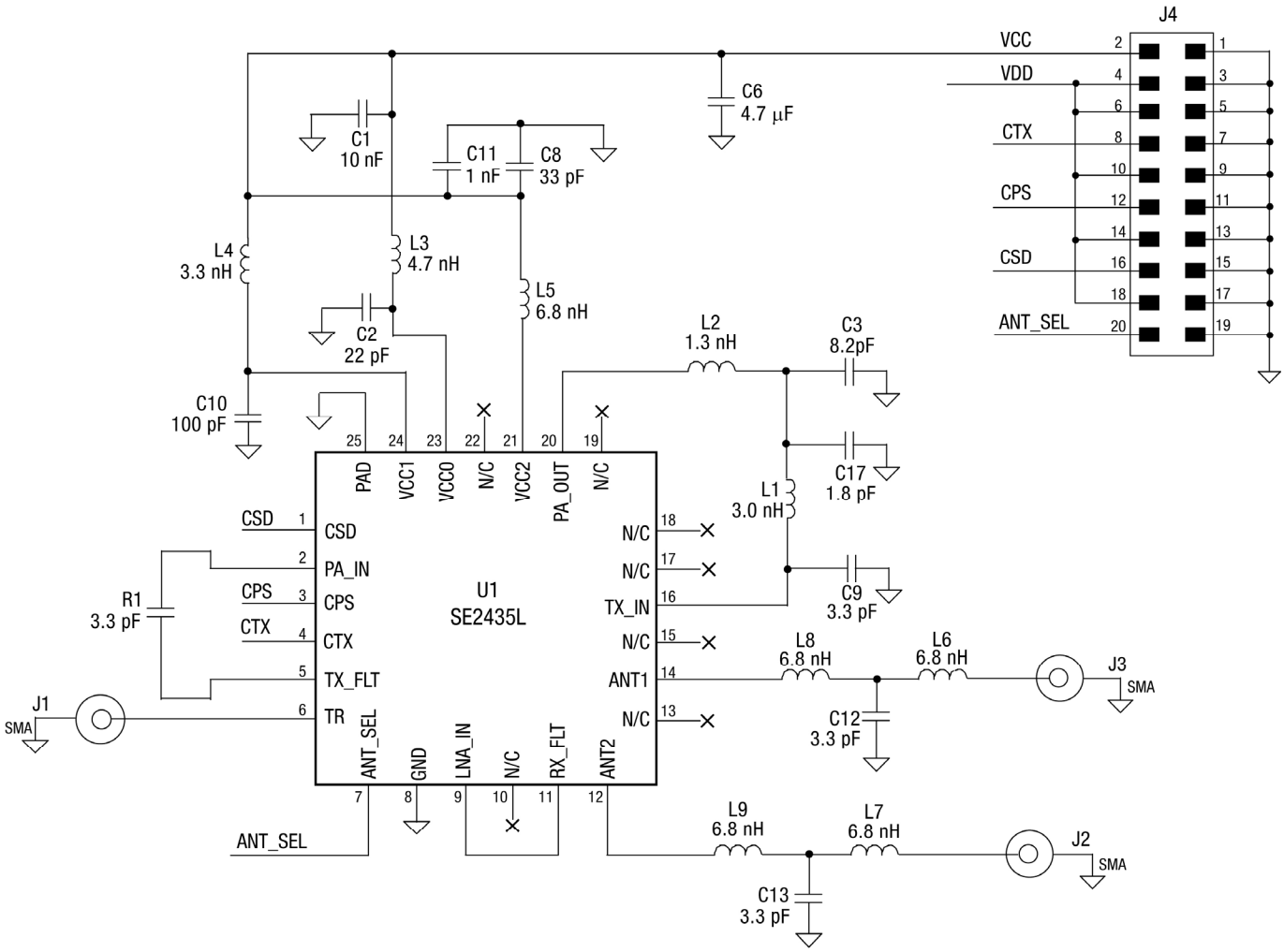

Note: Discard N/C pins that are connected to ground on the Evaluation Board.

202412-010

Figure 10. Evaluation Board Schematic for 915 MHz Application and FCC Conducted Harmonics Rejection Compliant

Table 10. SE2435L Evaluation Board Bill of Materials[1]

Component	Part Number	Description	Value	Package	Manufacturer
L2	LQG15HN1N3S02D	High frequency multilayer	1.3 nH	0402	muRata
C17	GRM1555C1H1R8CZ01	Multilayer ceramic	1.8 pF	0402	muRata
C11	GRM155R71H102KA01	Multilayer ceramic	1 nF	0402	muRata
L1	LQG15HN3N0S02D	High frequency multilayer	3.0 nH	0402	muRata
L4	LQG15HN3N3S02D	High frequency multilayer	3.3 nH	0402	muRata
L3	LQG15HN4N7S02D	High frequency multilayer	4.7 µF	0402	muRata
C6	GRM188R60J475KE19	Multilayer ceramic	4.7 µF	0603	muRata
C3	GRM1555C1H8R2DZ01	Multilayer ceramic	8.2 pF	0402	muRata
C1	GRM155R71E103KA01	Multilayer ceramic	10 nF	0402	muRata
J4	TSW-110-07-G-D	100 mil Header	10X2	100 mil	Samtec
C2	GRM1555C1H220JZ01	Multilayer ceramic	22 pF	0402	muRata
C8	GRM1555C1H330JZ01	Multilayer ceramic	33 pF	0402	muRata
C10	GRM1555C1H101JZ01	Multilayer ceramic	100 pF	0402	muRata
U1	SE2435L	860 to 930 MHz high power RF FEM	SE2435L	QFN400x400	Skyworks
J1, J2, J3	142-0701-851	SMA end launch straight jack receptacle - tab contact	SMA	End launch	Johnson Components
C9, C12, C13, R1	GRM1555C1H3R3CZ01	Multilayer ceramic	3.3 pF	0402	muRata
L5, L6 ,L7, L8, L9	LQG18HN6N8S00D	High frequency multilayer	6.8 nH	0603	muRata

[1] Schematic and BOM has been designed to optimize performance with CW signals, 100% duty cycle.

Evaluation Board Setup Procedure

This section provides the details required to setup the evaluation board and the test equipment for the SE2435L. Table 11 describes the pins on the Power and Control I/O Header J4. Note that it is recommended to use proper engineering connection practices by making RF and digital connections prior to turning on the power supply.

Connect Supply

1. Connect (J1, J2, and J3) to 50 Ω instruments. Terminate all unused ports (if applicable) with 50 Ω.
2. Connect the supply ground to Pin 1 of J4.
3. Connect 3.6 V or 4.0 V to Pin 2 of J4:
   The required RF path/antenna can be selected using the information in Table 6.

Measure Performance

- TX: The 860 to 930 MHz (depending on the region) amplifier performance can be monitored by applying an RF signal to connector J1 (TR), and monitoring the output power on connector J2 (ANT2) or J3 (ANT1).
- RX: The 860 to 930 MHz LNA performance can be monitored by applying an RF signal to connector J2 (ANT2) or J3 (ANT1), and monitoring the output signal on connector J1 (TR).

CAUTION *Be careful not to overdrive the amplifier by applying too much RF on the input to the device. A starting input power of -20 dBm is suitable.*

Table 11. Power and Control I/O Header (J4)

Evaluation Board Label	Pin Number	Description	Recommended setting
GND	1,3,5,7,9,11,13,15,17,19	Ground	General purpose grounds
VCC	2,4,6,10,14,18	Supply voltage	General purpose VCC provided as the main power supply.
CTX	8	Control	See Table 6.
CPS	12	Control	
CSD	16	Control	
ANTSEL	20	Control	

Package Dimensions

The layout footprint for the SE2435L is provided in Figure 11. Typical part markings are shown in Figure 12. Package dimensions for the SE2435L are shown in Figure 13, and tape and reel dimensions are provided in Figure 14.

Package and Handling Information

Instructions on the shipping container label regarding exposure to moisture after the container seal is broken must be followed. Otherwise, problems related to moisture absorption may occur when the part is subjected to high temperature during solder assembly.

The SE2435L is rated to Moisture Sensitivity Level 1 (MSL1) at 260 °C. It can be used for lead or lead-free soldering. For additional information, refer to the Skyworks Application Note, *Solder Reflow Information*, document number 200164.

Care must be taken when attaching this product, whether it is done manually or in a production solder reflow environment. Production quantities of this product are shipped in a standard tape and reel format.

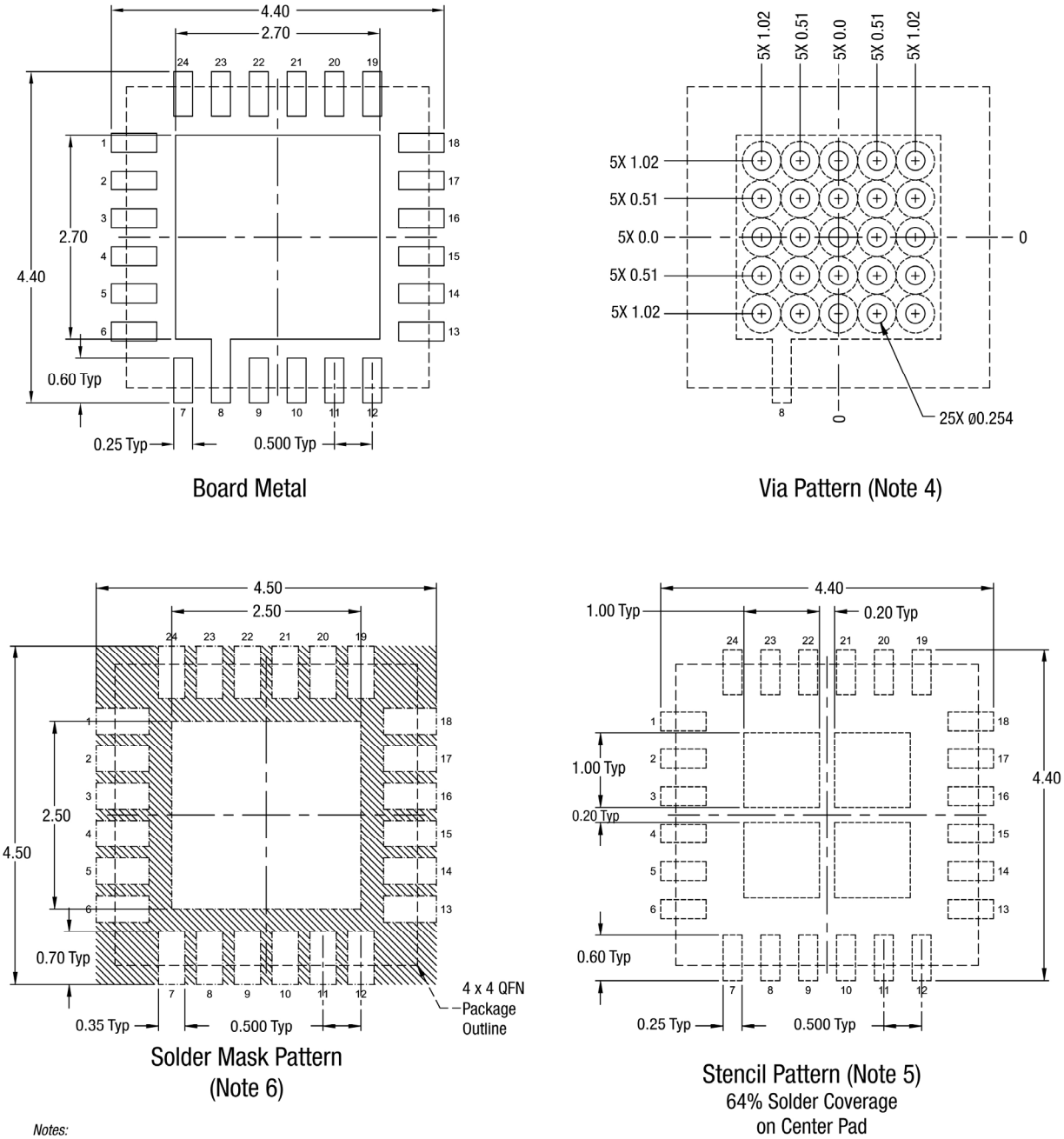

Notes:

1. *All dimensions are in millimeters.*
2. *Interpret dimensions and tolerances per ASME Y14.5M-1994.*
3. *Unless specified, dimensions are symmetrical about center lines.*
4. *Via hole recommendations:*
   0.025 mm Cu via wall plating (minimum), solder mask on the far side should tent or plug via holes.
5. *Stencil recommendations: 0.125 mm stencil thickness, laser cut apertures, trapezoidal walls and rounded corners offer the best paste release.*
6. *Solder mask recommendations: Contact board fabricator for recommended solder mask offset and tolerance.*

202412-011

Figure 11. SE2435L Recommended Footprint (Top View)

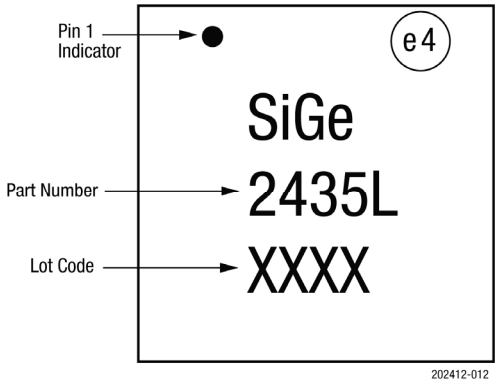

Figure 12. Typical Part Markings (Top View)

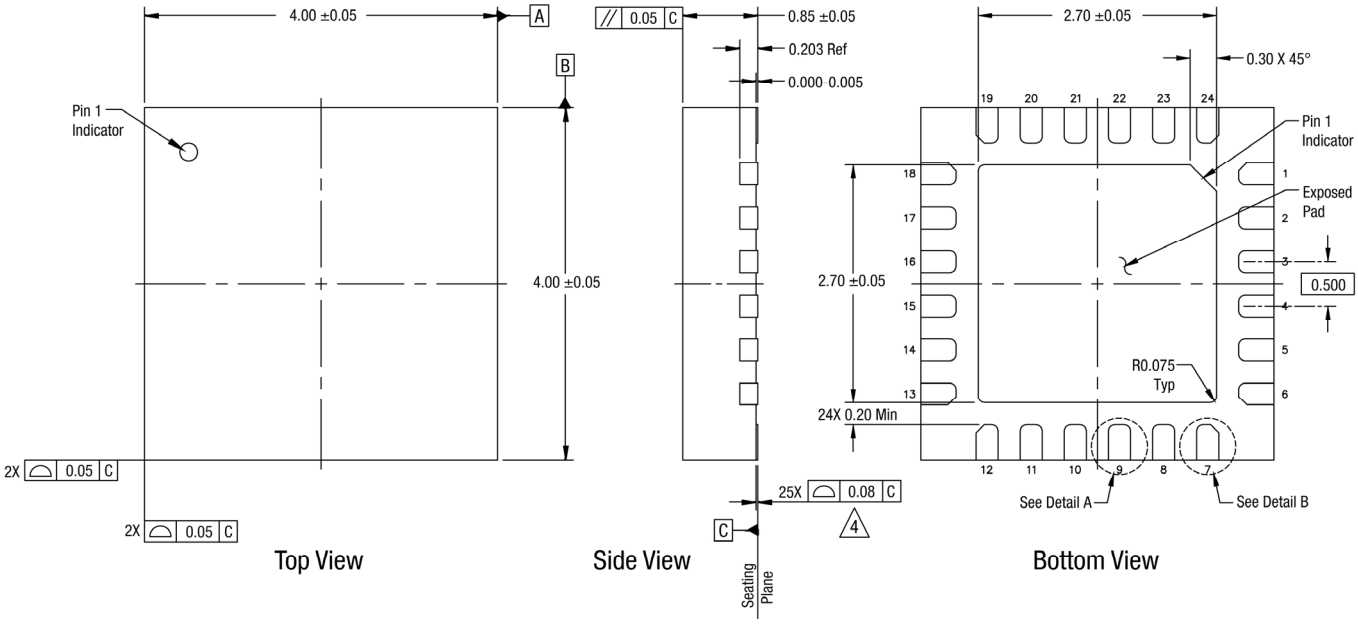

NOTES:

1. *All measurements are in millimeters, unless otherwise specified.*
2. *Dimensions and tolerances according to ASME Y14.5M-2009.*
3. *Unless otherwise specified the following values apply:*

Decimal Tolerance:	*Angular Tolerance:*
X.X (1 place) ± 0.1 mm	*±0.5°*
X.XX (2 places) ± 0.05 mm	
X.XXX (3 places) ± 0.025 mm	

4. *Coplanarity applies to the exposed center ground pad as well as the terminals.*
5. *Dimension applies to the metallized terminal. If the terminal has a radius, the dimension should not be measured in that radius area.*
6. *Plating requirements per source control drawing (SCD) 2504.*
7. *Unless specified, dimensions are symmetrical about center lines.*

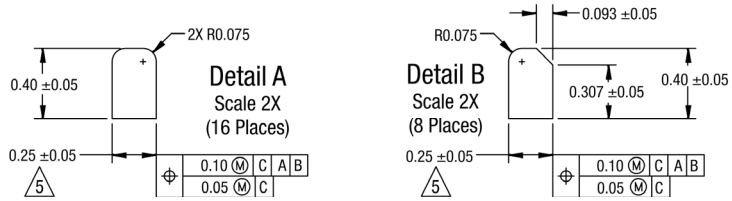

202412-013

Figure 13. SE2435L Package Dimensions

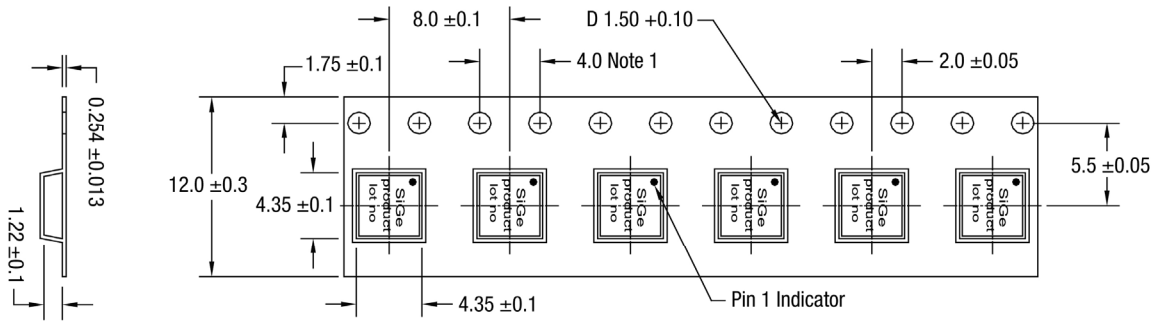

Notes:

1. *All dimensions are in millimeters.*
2. *Ten-sprocket hole pitch cumulative tolerance ±0.2 mm.*
3. *Camber in compliance with EIA-481.*

202412-014

Figure 14. SE2435L Tape and Reel Dimensions

Ordering Information

Model Name	Manufacturing Part Number	Evaluation Board Part Number
SE2435L: FCC +30 dBm 900 to 930 MHz Front-End Module	SE2435L	SE2435L-EK1
SE2435L: ETSI +27 dBm 868 to 880 MHz Front-End Module	SE2435L	SE2435L-EK2
SE2435L: ETSI + FCC +30 dBm 868 to 930 MHz Front-End Module	SE2435L	SE2435L-EK5
SE2435L: FCC +25 dBm 915 MHz Front-End Module	SE2435L	SE2435L-EK7

Copyright © 2013-2016, 2019 Skyworks Solutions, Inc. All Rights Reserved.

Information in this document is provided in connection with Skyworks Solutions, Inc. (“Skyworks”) products or services. These materials, including the information contained herein, are provided by Skyworks as a service to its customers and may be used for informational purposes only by the customer. Skyworks assumes no responsibility for errors or omissions in these materials or the information contained herein. Skyworks may change its documentation, products, services, specifications or product descriptions at any time, without notice. Skyworks makes no commitment to update the materials or information and shall have no responsibility whatsoever for conflicts, incompatibilities, or other difficulties arising from any future changes.

No license, whether express, implied, by estoppel or otherwise, is granted to any intellectual property rights by this document. Skyworks assumes no liability for any materials, products or information provided hereunder, including the sale, distribution, reproduction or use of Skyworks products, information or materials, except as may be provided in Skyworks Terms and Conditions of Sale.

THE MATERIALS, PRODUCTS AND INFORMATION ARE PROVIDED “AS IS” WITHOUT WARRANTY OF ANY KIND, WHETHER EXPRESS, IMPLIED, STATUTORY, OR OTHERWISE, INCLUDING FITNESS FOR A PARTICULAR PURPOSE OR USE, MERCHANTABILITY, PERFORMANCE, QUALITY OR NON-INFRINGEMENT OF ANY INTELLECTUAL PROPERTY RIGHT; ALL SUCH WARRANTIES ARE HEREBY EXPRESSLY DISCLAIMED. SKYWORKS DOES NOT WARRANT THE ACCURACY OR COMPLETENESS OF THE INFORMATION, TEXT, GRAPHICS OR OTHER ITEMS CONTAINED WITHIN THESE MATERIALS. SKYWORKS SHALL NOT BE LIABLE FOR ANY DAMAGES, INCLUDING BUT NOT LIMITED TO ANY SPECIAL, INDIRECT, INCIDENTAL, STATUTORY, OR CONSEQUENTIAL DAMAGES, INCLUDING WITHOUT LIMITATION, LOST REVENUES OR LOST PROFITS THAT MAY RESULT FROM THE USE OF THE MATERIALS OR INFORMATION, WHETHER OR NOT THE RECIPIENT OF MATERIALS HAS BEEN ADVISED OF THE POSSIBILITY OF SUCH DAMAGE.

Skyworks products are not intended for use in medical, lifesaving or life-sustaining applications, or other equipment in which the failure of the Skyworks products could lead to personal injury, death, physical or environmental damage. Skyworks customers using or selling Skyworks products for use in such applications do so at their own risk and agree to fully indemnify Skyworks for any damages resulting from such improper use or sale.

Customers are responsible for their products and applications using Skyworks products, which may deviate from published specifications as a result of design defects, errors, or operation of products outside of published parameters or design specifications. Customers should include design and operating safeguards to minimize these and other risks. Skyworks assumes no liability for applications assistance, customer product design, or damage to any equipment resulting from the use of Skyworks products outside of stated published specifications or parameters.

Skyworks and the Skyworks symbol are trademarks or registered trademarks of Skyworks Solutions, Inc. or its subsidiaries in the United States and other countries. Third-party brands and names are for identification purposes only, and are the property of their respective owners. Additional information, including relevant terms and conditions, posted at www.skyworksinc.com, are incorporated by reference.