DATA SHEET

SKY66121-11: 169 to 170 MHz Transmit / Receive Front-End Module

Applications

- Automated meter reading
- Advanced metering infrastructure
- ISM systems

Features

- Transmit output power: >+30 dBm
- High efficiency PA
- Receive loss with filter: 0.9 dB
- Sleep mode current: < 1 µA
- Integrated control logic
- Small footprint MCM (16-pin, 4 x 4 mm) package (MSL3, 260 °C per JEDEC J-STD-020)

Skyworks Green™ products are compliant with all applicable legislation and are halogen-free. For additional information, refer to *Skyworks Definition of Green™*, document number SQ04–0074.

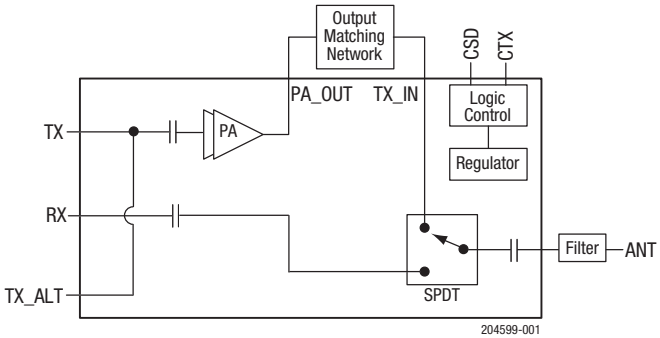

Figure 1. SKY66121-11 FEM Block Diagram

Description

The SKY66121-11 is a high-performance, transmit / receive (Tx / Rx) front-end module (FEM). The device includes a power amplifier (PA) capable of more than +30 dBm of transmit output power (V_{CC} = 3.6 V).

All functionality can be controlled by a two-wire interface. The FEM can be placed in a deep "sleep" mode, drawing less than 1 µA of current.

The receive chain consists of a low-loss single-pole, double-throw (SPDT) switch. Three separate V_{CC} pins enable maximum RF isolation.

The SKY66121-11 is packaged in a 16-pin, 4 x 4 mm Multi-Chip Module (MCM), which allows for a highly manufacturable low-cost solution.

A functional block diagram of the SKY66121-11 is shown in Figure 1. The 16-pin MCM package and pinout are shown in Figure 2. Signal pin assignments and functional pin descriptions are provided in Table 1.

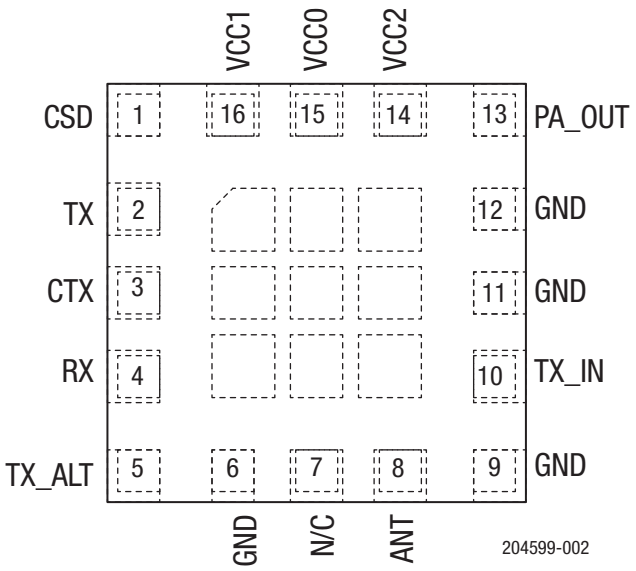

Figure 2. SKY66121-11 Pinout (Top View)

Table 1. SKY66121-11 Signal Descriptions

Pin	Name	Description	Pin	Name	Description
1	CSD	Control, shutdown/sleep, active low	9	GND	Ground
2	TX	Transmit RF input	10	TX_IN	Transmit input. Externally filtered signal
3	CTX	Control, transmit modes	11	GND	Ground
4	RX	Receive RF output	12	GND	Ground
5	TX_ALT	Alternative transmit RF input	13	PA_OUT	PA output
6	GND	Ground	14	VCC2	Supply for second stage of PA
7	N/C	No connection	15	VCC0	Supply for logic, regulator, bias
8	ANT	Antenna I/O	16	VCC1	Supply for first stage of PA

Technical Description

The SKY66121-11 consists of a complete Tx/Rx chain with Tx/Rx switches contained in the module. An SPDT switch selects between receive and transmit paths. The module has a shutdown mode to minimize power consumption.

Two digital input control pins (CSD and CTX) are used to select between shutdown or Tx/Rx, respectively.

The transmit path contains a PA optimized for saturated performance. The PA can be passed through an external impedance matching network and harmonic filter before being fed through the SPDT switch. External inductors for each of the two PA stages provide maximum application flexibility.

Electrical and Mechanical Specifications

The absolute maximum ratings of the SKY66121-11 are provided in Table 2. The recommended operating conditions are specified in Table 3 and electrical specifications are provided in Tables 4 through 7.

The state of the SKY66121-11 is determined by the logic provided in Table 8. Typical performance characteristics are shown in Figures 3 through 10.

Table 2. SKY66121-11 Absolute Maximum Ratings[1]

Parameter	Symbol	Minimum	Maximum	Units
Supply voltage (Pins: VCC0, VCC1, VCC2)	V_{CC}	-0.3	+4.4	V
Digital input voltage (Pins: CSD and CTX)	V_{CTL}	-0.5	V_{CC}	V
Receive RF input power, receive mode (Pin: ANT)	P_{IN_ANT}		+15	dBm
Transmit RF input power, transmit mode (Pin: TX)	P_{IN_TX}		-2	dBm
Output power	P_{OUT}		+31	dBm
Voltage standing wave ratio	VSWR		10:1	
Operating temperature	T_C	-40	+85	°C
Storage temperature	T_{STG}	-55	+150	°C

1 Exposure to maximum rating conditions for extended periods may reduce device reliability. There is no damage to device with only one parameter set at the limit and all other parameters set at or below their nominal value. Exceeding any of the limits listed here may result in permanent damage to the device.

***ESD HANDLING**: Although this device is designed to be as robust as possible, electrostatic discharge (ESD) can damage this device. This device must be protected at all times from ESD when handling or transporting. Static charges may easily produce potentials of several kilovolts on the human body or equipment, which can discharge without detection. Industry-standard ESD handling precautions should be used at all times.*

Table 3. SKY66121-11 Recommended Operating Conditions

Parameter	Symbol	Min	Typ	Max	Units
Operating frequency range	f	169		170	MHz
Supply voltage (Pins: VCC0, VCC1, VCC2)	V_{CC}	2.0	3.6	4.0	V
Receive RF input power, receive mode (Pin: RX)	P_{IN_RX}			+15	dBm
Transmit RF input power, transmit mode (Pin: TX)	P_{IN_TX}		-6		dBm

Table 4. SKY66121-11 DC Electrical Specifications[1]
(V_{CC} = +3.6 V, T_C = +25 °C, Unless Otherwise Noted)

Parameter	Symbol	Test Condition	Min	Typ	Max	Units
Receive current (Pins: VCC0, VCC1, VCC2)	I_{Q_RX}	Rx mode, P_{IN} = -20 dBm[2]		680		µA
Transmit quiescent current (Pins: VCC0, VCC1, VCC2)	I_{Q_TX}	Tx mode		65		mA
Transmit operating current (Pins: VCC0, VCC1, VCC2)	I_{OP_TX}	Tx mode: V_{CC} = 3.6 V, P_{OUT} = +30.0 dBm V_{CC} = 3.0 V, P_{OUT} = +28.0 dBm[3]		 600 470		 mA mA
Shutdown current (Pins: VCC0, VCC1, VCC2)[4]	I_{SD}	In sleep mode (see Table 8)		0.02	1.0	µA

1 Performance is guaranteed only under the conditions listed in this table.
2 Does not include control pin currents. See Table 7 for more information.
3 Not production tested.
4 All controls must be <0.1 V to achieve the specified sleep current.

Table 5. SKY66121-11 Receive Mode Electrical Specifications[1]
(V_{CC} = +3.6 V, T_C = +25 °C, f = 169 to 170 MHz, Characteristic Source and Load Impedance = 50 Ω, CW Input, Unless Otherwise Noted)

Parameter	Symbol	Test Condition	Min	Typ	Max	Units
Receive Mode: ANT to RX Output Path[2]						
Insertion loss[3]	IL			0.9		dB
1 dB input compression point[4]	IP1dB		+15			dBm
Third order input intercept point[4]	IIP3		+29			dBm
Input return loss[4]	|S11|		10	17		dB
Transition time[4,5]	T_{ON_RX}	Final mode is RX (see Table 8)		1		µs

1 Performance is guaranteed only under the conditions listed in this table.
2 Mode configured according to logic shown in Table 8.
3 Insertion loss includes the filter loss at the antenna port. See Figure 3.
4 Not production tested.
5 Elapsed time is from sleep mode to the final mode indicated in Table 8. A final mode is considered achieved when its corresponding P_{OUT} is at least 90% of its final value.

Table 6. SKY66121-11 Transmit Mode Electrical Specifications[1,2]
(V_{CC} = +3.6 V, P_{IN} = -6 dBm, T_C = +25 °C, f = 169 to 170 MHz, Characteristic Source and Load Impedance = 50 Ω, CW Input, Unless Otherwise Noted)

Parameter	Symbol	Test Condition	Min	Typ	Max	Units
Transmit Mode: TX to PA_OUT → TX_IN to ANT Path[3]						
Transmit output power	P_{OUT}	V_{CC} = 3.6 V V_{CC} = 3.0 V[4]	+29.0 +27.0	+30.0 +28.0		dBm dBm
2nd harmonic[4,5]	2fo				-36	dBm
3rd to 10th harmonics[4,5]	3fo 4fo 5fo 6fo 7fo 8fo 9fo 10fo				-54 -54 -54 -54 -54 -54 -54 -54	dBm dBm dBm dBm dBm dBm dBm dBm
Input return loss[4]	|S11|	P_{IN} = -30 dBm	10	14		dB
Output return loss[3,4]	|S22|	P_{IN} = -30 dBm	8	15		dB
Non-harmonic spurious power[4,5,6]	P_{SPUR}	VSWR = 6:1, all phases			-40	dBm
Power-on time[4,7]	T_{ON_TX}	Final mode = transmit (see Table 8)		1.2		µs
Receive isolation[8]	$\|S_{RXTX}\|$			10		dB

1 Performance is guaranteed only under the conditions listed in this table.
2 Mode configured according to logic shown in Table 8.
3 External output matching network and filter located between PA_OUT and TX_IN (pins 13 and 10, respectively).
4 Not production tested.
5 Final performance dependent on external filter. The 2nd to 10th harmonics are fully characterized but are not production tested.
6 Measurement performed with spectrum analyzer (RBW = 100 kHz for frequencies < 1 GHz and RBW = 1 MHz for frequencies between 1 GHz and 10 GHz.
7 Elapsed time is from sleep mode to the final mode indicated in Table 8. A final mode is considered achieved when its corresponding P_{OUT} is at least 90% of its final value.
8 TX-RX isolation includes the gain on the PA.

Table 7. SKY66121-11 Electrical Specifications: Control Logic Characteristics[1]
(T_C = +25 °C, Unless Otherwise Noted)

Parameter	Symbol	Test Condition	Min	Typ	Max	Units
Control voltage: [2]						
High	V_{IH}		1.6	V_{CC}	V_{CC}	V
Low	V_{IL}		0	0	0.7	V
Input current: [3]						
High:	I_{IH}					
CSD				36		µA
CTX				72		µA
Low:	I_{IL}					
CSD				0		µA
CTX				0		µA

1 Performance is guaranteed only under the conditions listed in this table. Control logic input signals are CSD and CTX.

2 Not production tested.

3 The CSD and CTX control pins have 100 kΩ and 50 kΩ pull-down resistors, respectively.

.

Table 8. SKY66121-11 Mode Control Logic[1]

Mode	RF Signal Path (Pin → Pin)	CSD (Pin 1)	CTX (Pin 3)
Sleep	(Note 2)	0	X
Receive	ANT → RX	1	0
Transmit	TX → PA_OUT and TX_IN → ANT	1	1

1 "1" = 1.6 to Vcc, "0" = 0 to 0.7 V, "X" = don't care.

2 All I/O are disconnected from internal components.

Typical Performance Characteristics
(VCC = 3.6 V, f = 169 MHz Signal, Unless Otherwise Noted)

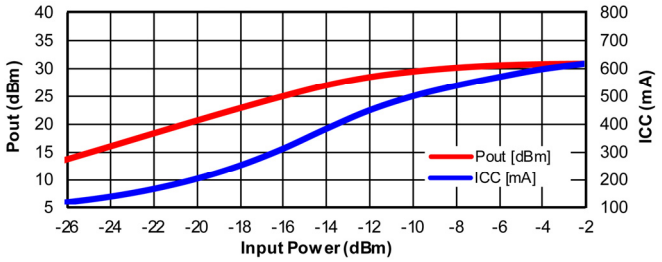

Figure 3. POUT and ICC vs PIN, CW

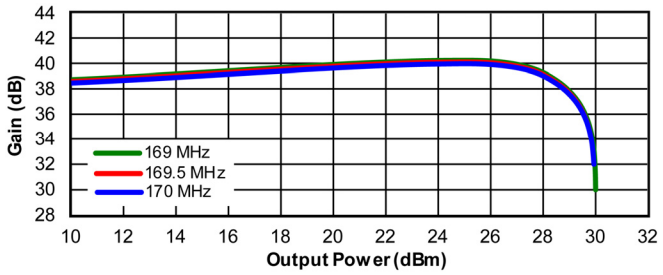

Figure 4. Gain vs POUT, CW

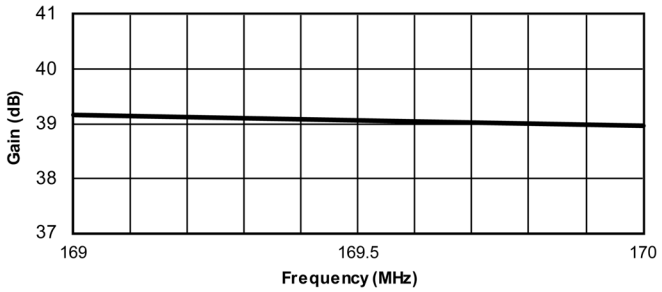

Figure 5. Small Signal Gain vs Frequency, CW

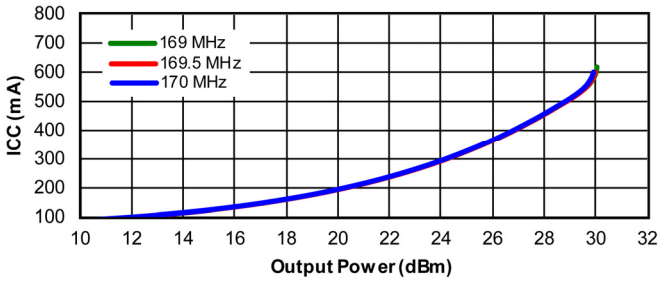

Figure 6. ICC vs POUT, CW

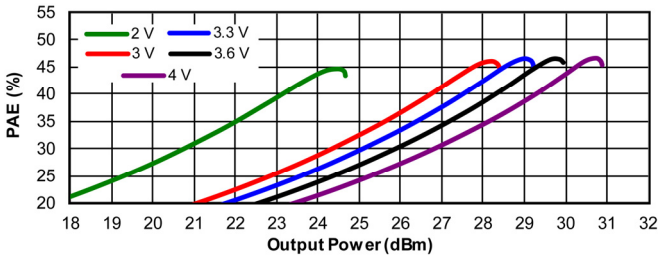

Figure 7. PAE vs POUT and VCC, CW

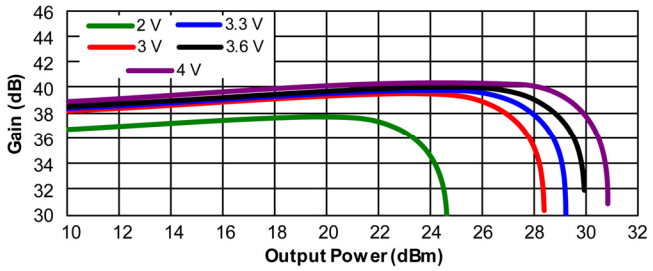

Figure 8. Gain vs POUT and VCC, CW

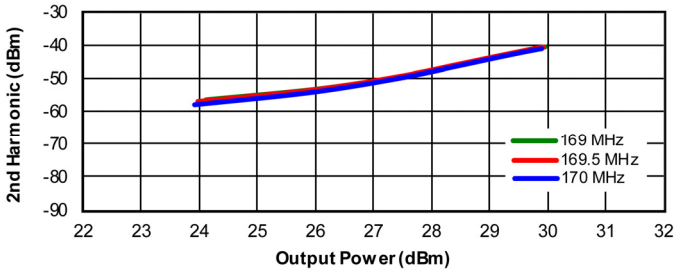

Figure 9. Second Harmonic vs POUT, CW

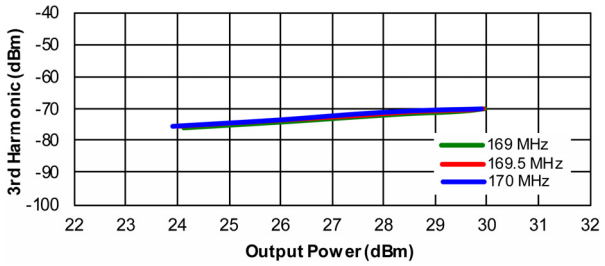

Figure 10. Third Harmonic vs POUT, CW

Evaluation Board Description

The SKY66121-11 Evaluation Board is used to test the performance of the SKY66121-11 FEM.

An Evaluation Board schematic diagram is provided in Figure 11. A photograph of the Evaluation Board is shown in Figure 12.

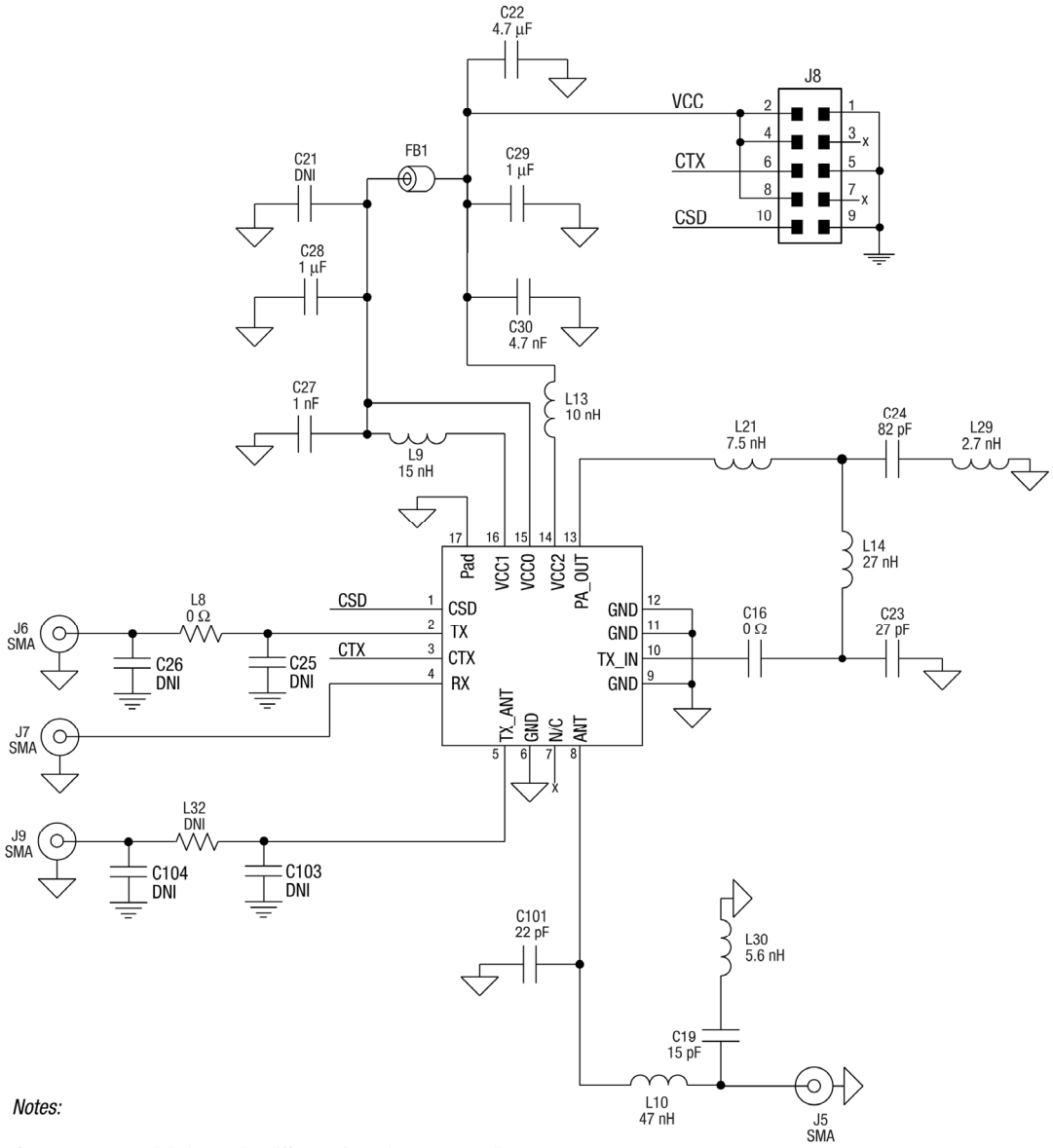

Notes:

Some component labels may be different from the corresponding component symbol shown here.
Component values, however, are accurate as of the date of this data sheet.

Figure 11. SKY66121-11 Evaluation Board Schematic

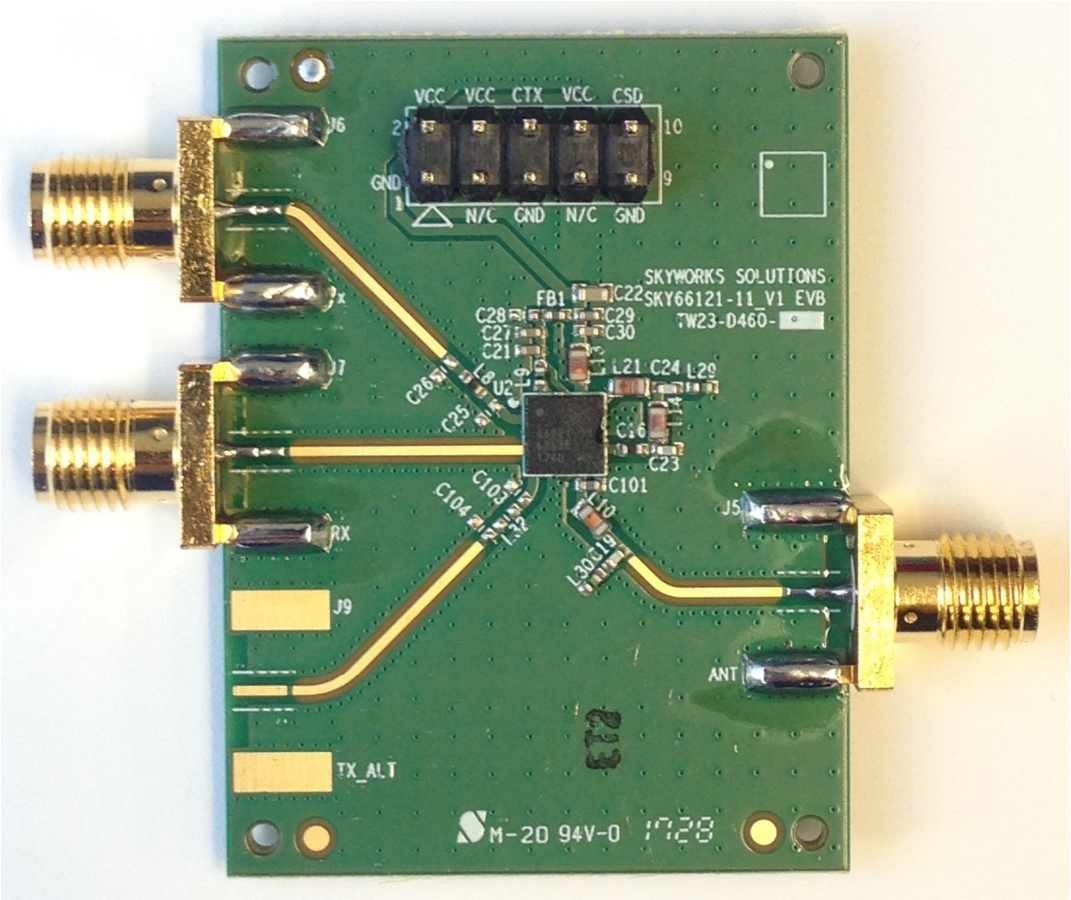

Figure 12. SKY66121-11 Evaluation Board

Package Dimensions

The typical part marking for the SKY66121-11 is shown in Figure 13. The PCB layout footprint for the SKY66121-11 is provided in Figure 14. Figure 15 shows the package dimensions, and Figure 16 provides the tape and reel dimensions.

Package and Handling Information

Since the device package is sensitive to moisture absorption, it is baked and vacuum packed before shipping. Instructions on the shipping container label regarding exposure to moisture after the container seal is broken must be followed. Otherwise, problems related to moisture absorption may occur when the part is subjected to high temperature during solder assembly.

The SKY66121-11 is rated to Moisture Sensitivity Level 3 (MSL3) at 260 °C. It can be used for lead or lead-free soldering. For additional information, refer to the Skyworks Application Note, *PCB Design and SMT Assembly/Rework Guidelines for MCM-L Packages*, document number 101752.

Care must be taken when attaching this product, whether it is done manually or in a production solder reflow environment. Production quantities of this product are shipped in a standard tape and reel format. The reel quantity is 3 Ku.

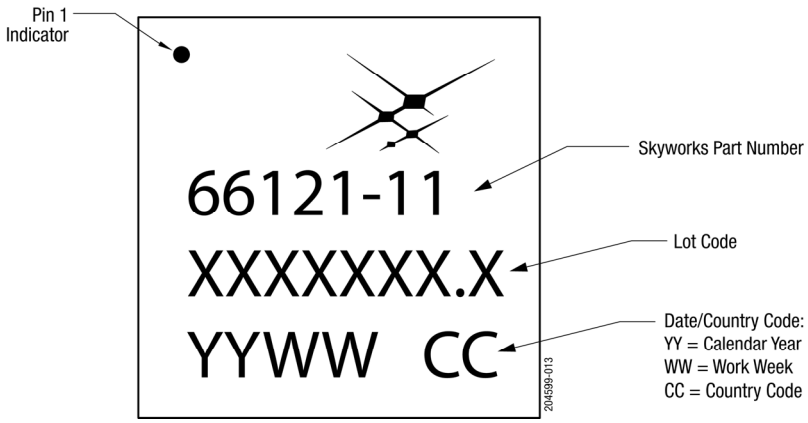

Figure 13. Typical Part Marking

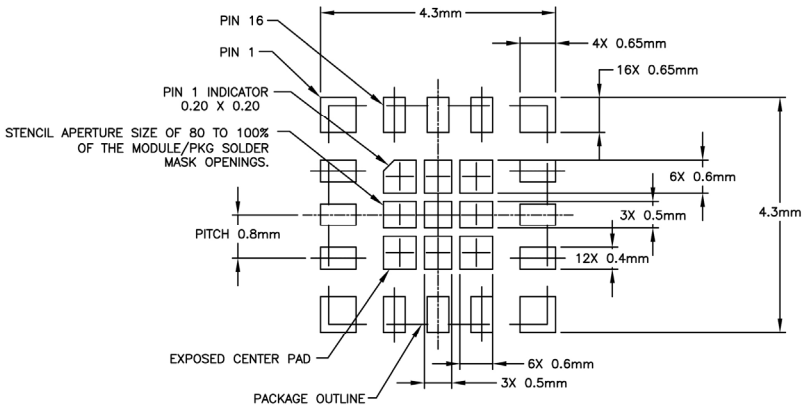

STENCIL APERTURE
Top View

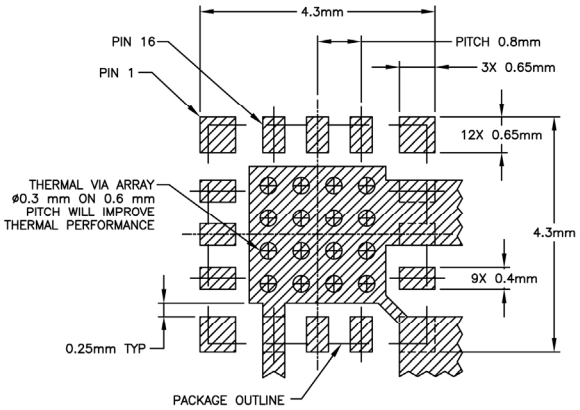

METALLIZATION
Top View

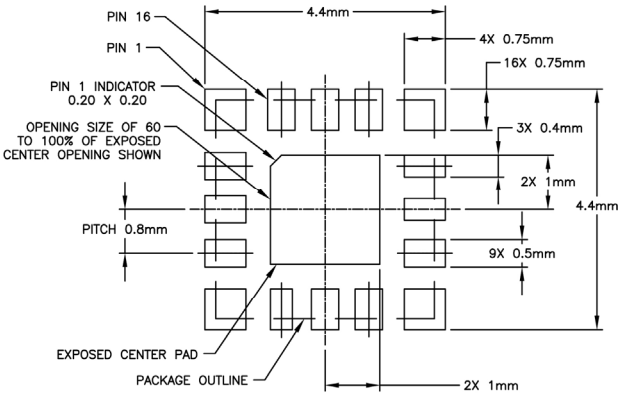

SOLDER MASK OPENING
Top View

NOTE: THERMAL VIAS SHOULD BE RESIN FILLED AND CAPPED IN ACCORDANCE WITH IPC–4761 TYPE VII VIAS. 30–35UM Cu THICKNESS IS RECOMMENDED.

204599-014

Figure 14. PCB Layout Footprint for the SKY66121-11

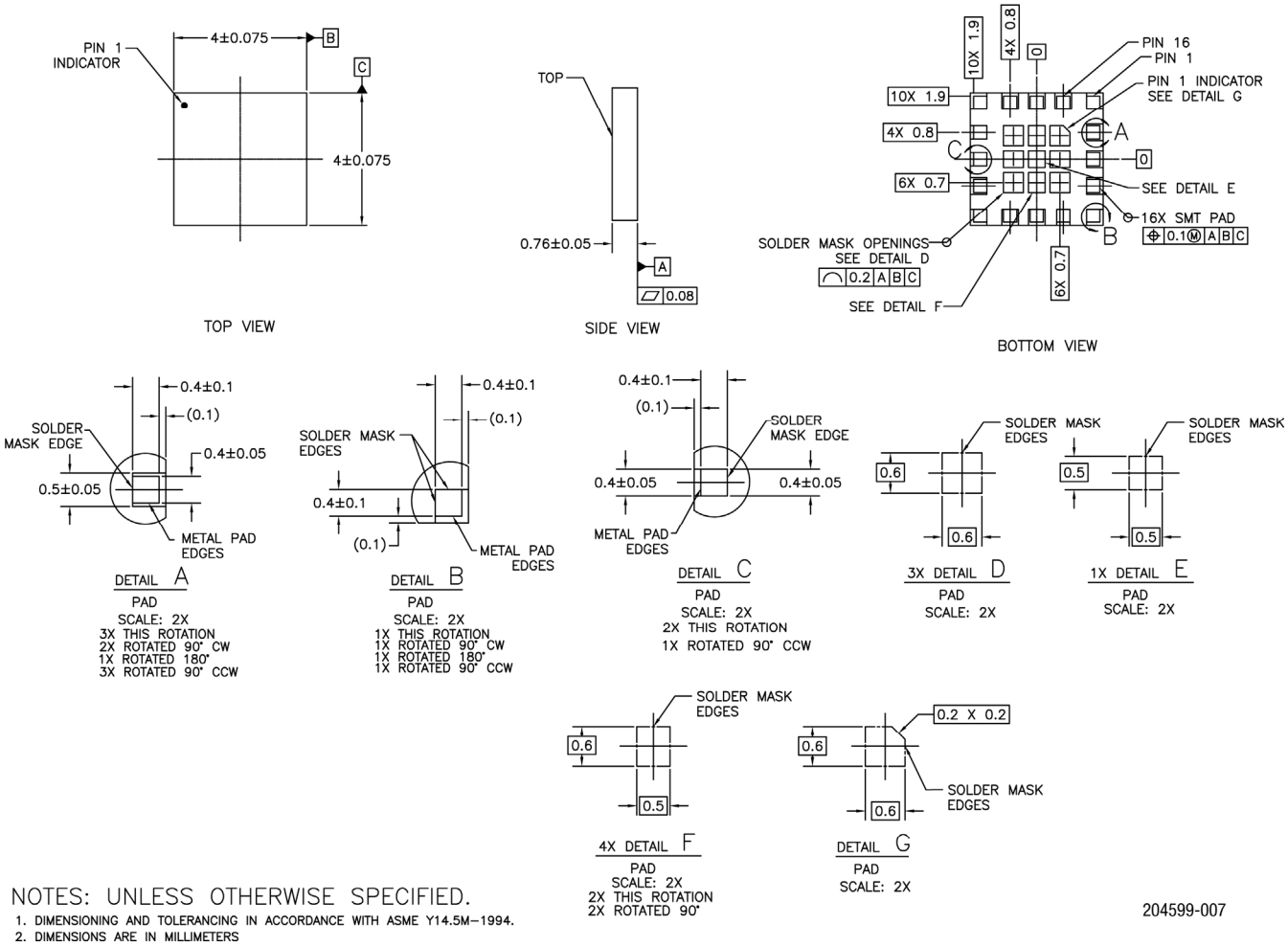

Figure 15. SKY66121-11 Package Dimensions

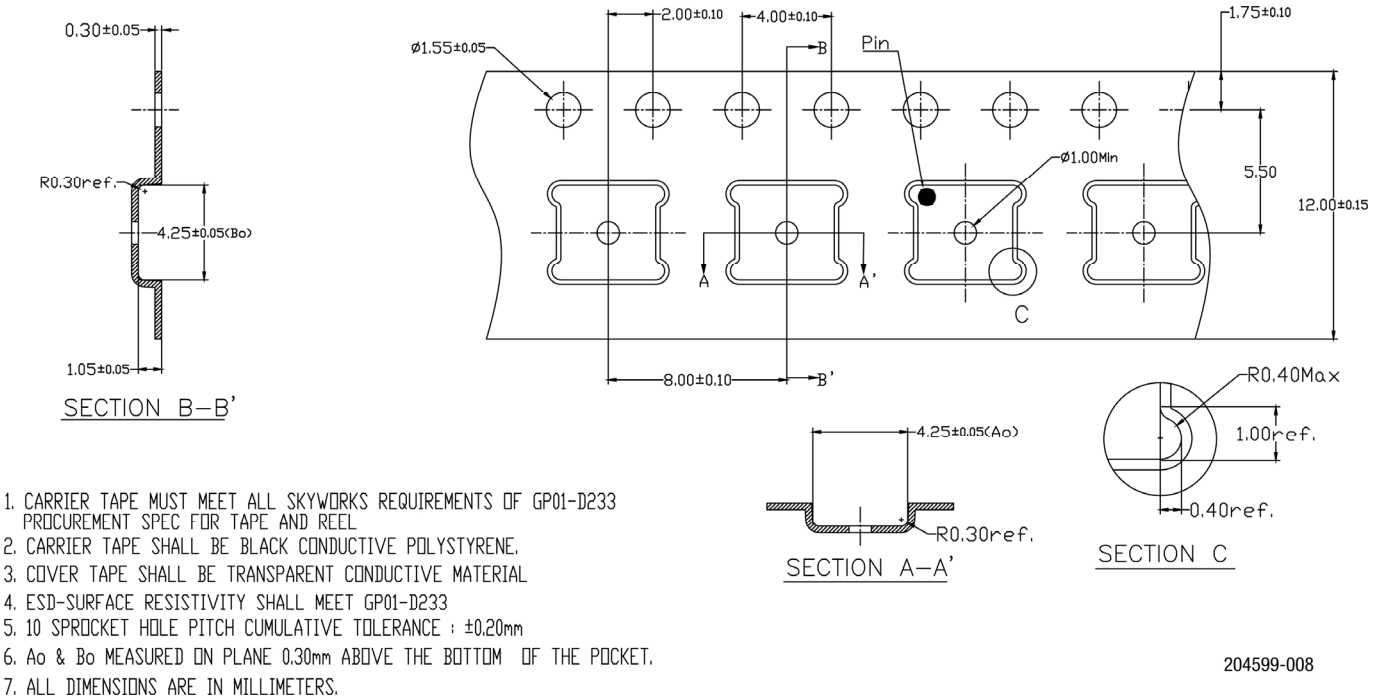

1. CARRIER TAPE MUST MEET ALL SKYWORKS REQUIREMENTS OF GP01-D233 PROCUREMENT SPEC FOR TAPE AND REEL
2. CARRIER TAPE SHALL BE BLACK CONDUCTIVE POLYSTYRENE.
3. COVER TAPE SHALL BE TRANSPARENT CONDUCTIVE MATERIAL
4. ESD-SURFACE RESISTIVITY SHALL MEET GP01-D233
5. 10 SPROCKET HOLE PITCH CUMULATIVE TOLERANCE : ±0.20mm
6. Ao & Bo MEASURED ON PLANE 0.30mm ABOVE THE BOTTOM OF THE POCKET.
7. ALL DIMENSIONS ARE IN MILLIMETERS.

Figure 16. SKY66121-11 Tape and Reel Dimensions

Ordering Information

Part Number	Product Description	Evaluation Board Part Number
SKY66121-11	Transmit / Receive Front-End Module	SKY66121-11EK1

Copyright © 2017-2019 Skyworks Solutions, Inc. All Rights Reserved.

Information in this document is provided in connection with Skyworks Solutions, Inc. (“Skyworks”) products or services. These materials, including the information contained herein, are provided by Skyworks as a service to its customers and may be used for informational purposes only by the customer. Skyworks assumes no responsibility for errors or omissions in these materials or the information contained herein. Skyworks may change its documentation, products, services, specifications or product descriptions at any time, without notice. Skyworks makes no commitment to update the materials or information and shall have no responsibility whatsoever for conflicts, incompatibilities, or other difficulties arising from any future changes.

No license, whether express, implied, by estoppel or otherwise, is granted to any intellectual property rights by this document. Skyworks assumes no liability for any materials, products or information provided hereunder, including the sale, distribution, reproduction or use of Skyworks products, information or materials, except as may be provided in Skyworks Terms and Conditions of Sale.

THE MATERIALS, PRODUCTS AND INFORMATION ARE PROVIDED “AS IS” WITHOUT WARRANTY OF ANY KIND, WHETHER EXPRESS, IMPLIED, STATUTORY, OR OTHERWISE, INCLUDING FITNESS FOR A PARTICULAR PURPOSE OR USE, MERCHANTABILITY, PERFORMANCE, QUALITY OR NON-INFRINGEMENT OF ANY INTELLECTUAL PROPERTY RIGHT; ALL SUCH WARRANTIES ARE HEREBY EXPRESSLY DISCLAIMED. SKYWORKS DOES NOT WARRANT THE ACCURACY OR COMPLETENESS OF THE INFORMATION, TEXT, GRAPHICS OR OTHER ITEMS CONTAINED WITHIN THESE MATERIALS. SKYWORKS SHALL NOT BE LIABLE FOR ANY DAMAGES, INCLUDING BUT NOT LIMITED TO ANY SPECIAL, INDIRECT, INCIDENTAL, STATUTORY, OR CONSEQUENTIAL DAMAGES, INCLUDING WITHOUT LIMITATION, LOST REVENUES OR LOST PROFITS THAT MAY RESULT FROM THE USE OF THE MATERIALS OR INFORMATION, WHETHER OR NOT THE RECIPIENT OF MATERIALS HAS BEEN ADVISED OF THE POSSIBILITY OF SUCH DAMAGE.

Skyworks products are not intended for use in medical, lifesaving or life-sustaining applications, or other equipment in which the failure of the Skyworks products could lead to personal injury, death, physical or environmental damage. Skyworks customers using or selling Skyworks products for use in such applications do so at their own risk and agree to fully indemnify Skyworks for any damages resulting from such improper use or sale.

Customers are responsible for their products and applications using Skyworks products, which may deviate from published specifications as a result of design defects, errors, or operation of products outside of published parameters or design specifications. Customers should include design and operating safeguards to minimize these and other risks. Skyworks assumes no liability for applications assistance, customer product design, or damage to any equipment resulting from the use of Skyworks products outside of stated published specifications or parameters.

Skyworks and the Skyworks symbol are trademarks or registered trademarks of Skyworks Solutions, Inc. or its subsidiaries in the United States and other countries. Third-party brands and names are for identification purposes only, and are the property of their respective owners. Additional information, including relevant terms and conditions, posted at www.skyworksinc.com, are incorporated by reference.