Product Overview

ZDH1421 is a high-performance transmit/receive (TX/RX) front-end module that integrates a power amplifier (PA) and a low-loss single-pole double-throw (SPDT) switch. All functions are controllable via a single two-wire interface. The module can operate in deep sleep mode with a current draw of less than 1μA. Three independent VCC pins provide maximum RF isolation.

ZDH1421 is packed in a green, lead-free standard 4x4-16 package, offering excellent reliability, cost-effectiveness, and a high performance-to-price ratio.

Typical Application Scenarios

- Automated meter reading
- Advanced metering infrastructure
- ISM systems

Absolute Maximum Ratings

Parameter	Values
Storage temperature	-55°C~+150°C
Operating temperature	-55°C~+125°C
Supply voltage (VCC)	+4.5V
Digital input voltage (V_{CSD}/V_{CTX})	+4.5V
TX RF input power	-2dBm
ANT input power	+15dBm

Operating Status Control Logic Table

State	Signal path	CSD	CTX
Sleep	All disconnected	0	X
Receive	ANT→RX	1	0
Transmit	TX→PA_OUT and TX_IN → ANT	1	1

"1": High level 1.6V~VCC

"0": Low level 0V~0.7V

"X": Don't care

Product Features

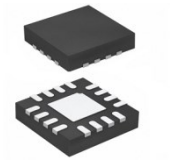

- 2V~4V single voltage supply, typical operating current 864mA @ 3.6V
- Typical TX output power: 30dBm @ 3.6V
- Typical RX IP1dB: 30dBm
- Typical RX insertion loss: 0.5dB
- Input/output 50Ω impedance matching
- Green lead-free 16-pin 4x4 package

  This product complies with all relevant regulations and is halogen-free.

Pin Diagram (Top View)

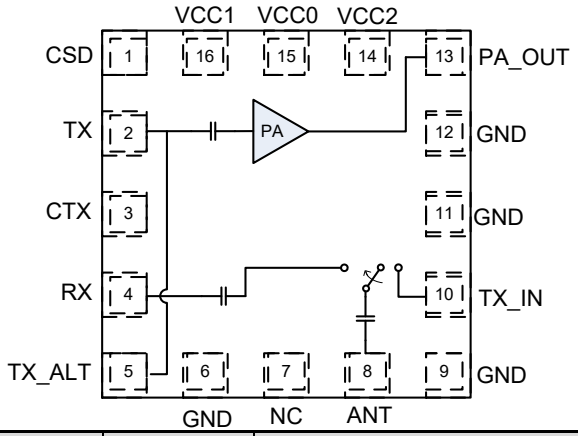

Pin	Name	Description
1	CSD	Shutdown/Sleep Control
2	TX	RF Signal Input
3	CTX	Select Transmit Mode
4	RX	RF Signal Output
5	TX_ALT	RF Signal Input (Spare Pin)
6,9,11,12	GND	Ground
7	NC	Empty, Floating, or Ground
8	ANT	Antenna Input/Output
10	TX_IN	Antenna Input Signal
13	PA_OUT	PA Output
14	VCC2	PA Second Stage Supply Voltage
15	VCC0	Logic/Regulator/Bias Voltage
16	VCC1	PA First Stage Supply Voltage
17	EPAD	Bottom grounding

Recommended Operating Conditions

Parameter	Minimum	Typical	Maximum	Unit
Operating Frequency (f)	169	-	170	MHz
Supply Voltage (VCC0, VCC1, VCC2)	2.0	3.6	4.0	V
RX Input Power	-	-	+15	dBm
TX Input Power	-10	-6	-	dBm

DC Electrical Parameters

Parameter	Condition	Minimum	Typical	Maximum	Unit
Icq_TX	-	-	180	-	mA
Icq_RX	PIN=-20dBm	-	490	-	uA
IOP_TX	VCC=3.6V,Pout=32dBm	-	846	-	mA
	VCC=3.0V,Pout=30dBm	-	695	-	mA
Icc_OFF	No RF,sleep mode	-	0.02	(Note)	uA

Note: When all control pins are "0", the maximum shutdown current is 1uA; when CTX is "1", the maximum shutdown current is 80uA.

TX Electrical Parameters

Test conditions: VCC = +3.6V, Temp = +25°C, PIN = -10dBm, 169MHz~170MHz application circuit, 50Ω test system.

Parameter	Minimum	Typical	Maximum	Unit	Condition
Output Power (Pout)	29	30	32	dBm	VCC=3.6V
	27	28	30	dBm	VCC=3.0V
Harmonics	-	-44	-36	dBm	2nd harmonic
	-	-63	-54	dBm	3rd harmonic
	-	-73	-54	dBm	4th harmonic
	-	-100	-54	dBm	5th harmonic
	-	-	-54	dBm	6th harmonic
	-	-	-54	dBm	7th harmonic
	-	-	-54	dBm	8th harmonic
	-	-	-54	dBm	9th harmonic
	-	-	-54	dBm	10th harmonic
Input return loss (S_{11})	-	-15	-10	dB	PIN = -30 dBm
Output return loss (S_{22})	-	-14	-8	dB	PIN = -30 dBm
Isolation (S_{RXTX})	-	-48	-	dB	-
Non-harmonic spurious power	-	-	-40	dBm	VSWR = 6:1, all phases
Turn-on time	-	1.2		us	Final mode = transmit

RX Electrical Parameters

Test conditions: VCC = +3.6V, Temp = +25°C, 169MHz~170MHz application circuit, 50Ω test system.

Parameter	Minimum	Typical	Maximum	Unit	Condition
Insertion Loss	-	-0.5	-	dB	-
Input Return Loss	-	-15	-10	dB	RX port
IP1dB	30	-	-	dBm	-
IIP3	35	-	-	dBm	
Turn-on time	-	-	1	us	Final mode is RX

Control Logic Parameters

Parameter	Minimum	Typical	Maximum	Unit
Control Voltage:				
High (VIH)	1.6	-	VCC	V
Low (VIL)	0	-	0.7	V
Control Current:				
High (IIH)				
CSD	-	24	-	uA
CTX	-	80	-	uA
Low (IIL)				
CSD	-	0	-	uA
CTX	-	0	-	uA

Note: The CSD and CTX control pins have 100kΩ and 50kΩ pull-down resistors respectively.

Typical application circuit

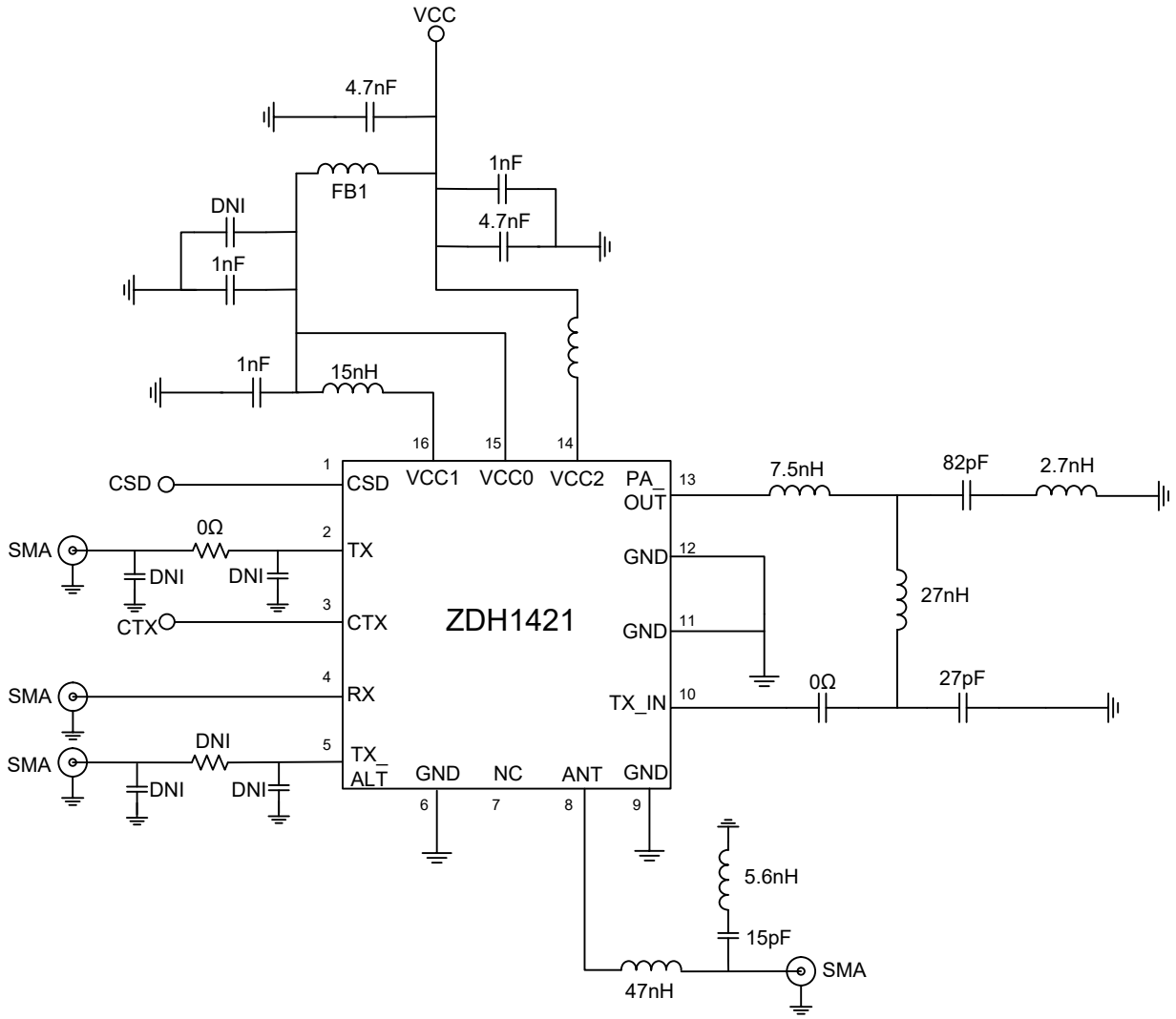

Package diagram

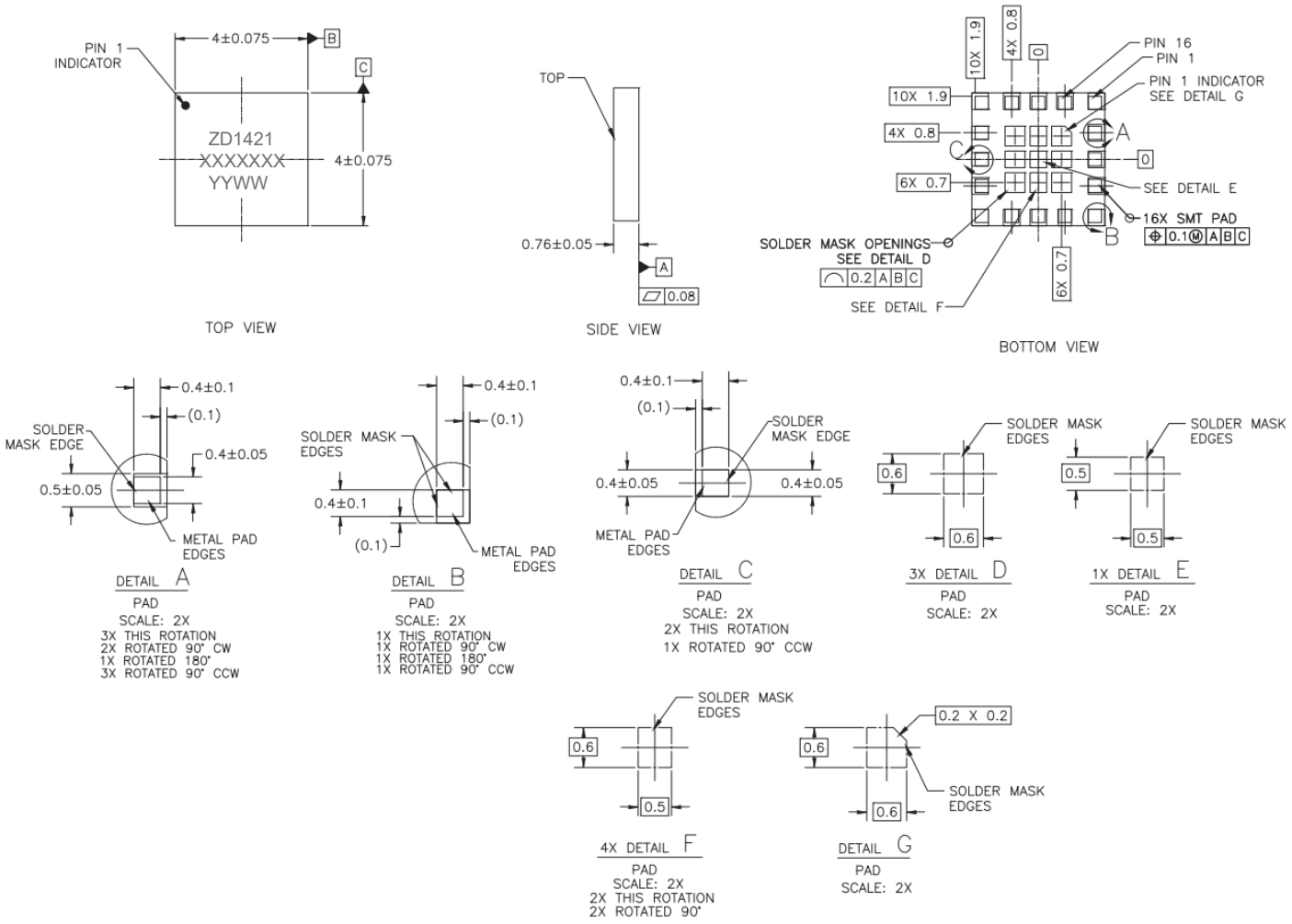

Ordering Information

Part NO.	Marking	Package
ZDH1421	ZD1421	4x4-16pin