Product Introduction

The ZDH1466 is a high-performance transmit/receive (T/R) range extender that provides a complete T/R chain with a T/R switch, and also features a power-off mode, PA bypass mode, and LNA bypass mode to minimize power consumption.

The ZDH1466 is packed in a green, lead-free standard LGA6x6-28 package, offering excellent reliability, economy, and a high cost-performance ratio, enabling a highly manufacturable, low-cost solution.

Typical Application Scenarios

- Automatic Meter Reading
- High-Metering Infrastructure
- ISM System
- Range Extender

Functional Block Diagram

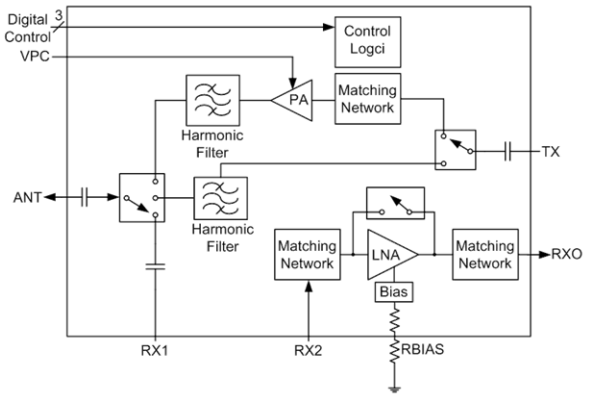

Features

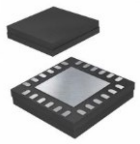

- 3V~4V single voltage supply
- Typical operating current 12mA
- Transmit power: 30.2dBm
- Receive path NF < 2.2 dB
- LNA low current mode with external resistor
- Internal RF matching and biasing circuitry
- Green lead-free 28-pin LGA6x6 package

This product complies with all applicable regulations and is Pb-free and halogen-free.

Absolute Maximum Ratings

Parameter	Value
LNA Power Supply Voltage	-0.3~+5V
LNA Power Supply Current	20mA
PA Power Supply Voltage	-0.3~+6V
Digital Power Supply Voltage	-0.3~+5.5V
Digital Control Voltage (TR, EN, BYP)	-0.5V~ +V_{DD1}+0.3V
Transmit power control voltage	-0.3~+5V
Receive RF input power (RX2)	+5dBm
Receive RF input power (ANT)	+33dBm
Transmit RF input power	+15dBm
Transmit RF input power, bypass mode	+20dBm
Operating temperature	-55°C~+125°C
Storage temperature	-40°C~+150°C
T/R port load VSWR in transmit mode	10:1

Pin diagram (Top View)

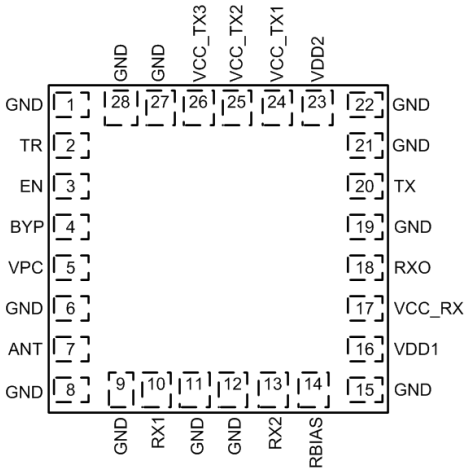

Pin	Name	Description	Pin	Name	Description
1,6,8,9,11,12,15,19,21,22,27,28	GND	Ground	16	VDD1	3.3V Power Supply
2	TR	Digital Control Input: Transmit/Receive	17	VCC_RX	3.3V Power Supply
3	EN	Digital Control Input: Power Off	18	RXO	Receive Output
4	BYP	Digital Control Input: Receive Bypass	20	TX	TX Transmit Path Input Port, internally matched to 50 Ω
5	VPC	Transmit Power Adjustment	23	VDD2	3.9V Power Supply
7	ANT	Common antenna switch port, internally matched to 50 Ω	24	VCC_TX1	3.9V Power Supply
10	RX1	The receiving antenna switch port, internally matched to 50 Ω	25	VCC_TX2	3.9V Power Supply
13	RX2	Low-noise amplifier and bypass switch output port, internally matched to 50 Ω	26	VCC_TX3	3.9V Power Supply
14	RBIAS	Low noise amplifier bias setting resistor	29	EPAD	Bottom ground

Recommended operating conditions

Parameter	Minimum value	Typical value	Maximum value	Unit
Transmit frequency range	400	-	500	MHz
Receive frequency range	400	-	500	MHz
LNA power supply voltage	3.00	3.30	3.45	V
Digital power supply voltage (VDD1, VDD2)	3.00（VDD1） 3.70（VDD2）	VCC_RX （VDD1） VCC_TX1/2/3（VDD2）	3.45（VDD1） 4.00（VDD2）	V
PA Power Supply Voltage (VCC_TX1/2/3)	3.70	3.90	4.00	V
Digital Input Voltage, Logic 0 (TR, EN, BYP)	0	-	0.7	V
Digital Input Voltage, Logic 1 (TR, EN, BYP)	1.6	-	VDD1	V
Transmit Output Power Control Voltage	0	2.25	2.50	V
Receive RF Input Power (RX2)	-	-	-15	dBm
Transmit RF Input Power (TX)	-	+10	+13	dBm
Transmit Duty Cycle	-	-	50	%

Operating status control logic table

State	Control level			Internal state				
	TR（Pin2）	EN（Pin 3）	BYP（Pin4）	PA	LNA	LNA Bypass Switch	T/R Switch	PA Bypass Switch
Transmit	1	1	0	ON	OFF	Open	PA	PA
Transmit bypass	1	1	1	OFF	OFF	Open	PA bypass	PA bypass
Receive	0	1	0	OFF	ON	Open	RX1	Open
Receive bypass	0	1	1	OFF	OFF	Through	RX1	Open
Shutdown	X	0	X	OFF	OFF	Open	Open	Open

“X”: Don’t care; In the high-level state, the input current of TR, EN and BYP is 33 μA.

DC electrical parameters

Test conditions: VCC_RX = VDD1 = 3.3 V, VCC_TX1/2/3 = VDD2 = 3.9 V, TC = 25°C, RBIAS = 0Ω, VPC = 2.25 V, no RF input power.

Parameter	Condition	Minimum	Typical	Maximum	Unit
I_{Q_RX}	-	-	12	20	mA
I_{Q_BYP}	-	-	50	76	μA
I_{Q_VDD1}	VPC = 2.25V	-	22	25	mA
I_{Q_TX}	TC = 25°C，VCC_TX1/2/3 = 3.9V,VPC = 2.25V	-	26	-	mA
I_{OP_TX}	P_{IN} = +10 dBm, VPC =2.25V, f = 418 MHz, VCC_TX1/2/3 = 3.9V	-	780	880	mA
I_{DD1}	-	-	25	-	μA
I_{Q_TXB}	-	-	0.5	-	μA
$I_{Q_SD_RX}$	-	-	0.025	-	μA
$I_{Q_SD_TX}$	-	-	0.3	-	μA
I_H	-	-	33	-	μA
I_L	-	-	0	-	μA

RX Electrical Parameters

Test Conditions: VCC_RX = VDD1 = 3.3 V, VCC_TX1/2/3 = VDD2 = 3.9 V, TC = 25 °C, f = 412 to 424 MHz, 50 Ω source and load impedance, CW input, RBIAS = 0 Ω.

Parameter	Minimum	Typical	Maximum	Unit	Condition
Receiver Mode: RX2 to Receiver Output Path					
Small Signal Gain	19	21	-	dB	-
Noise Figure	-	1.8	2.1	dB	TC = 25°C，VCC_RX = 3.3V
NF_{TEMP}	-	±0.3	-	dB	-
IP1dB	-19	-17	-	dBm	1 dB Gain Compression
IIP3	-11	-8.5	-	dBm	P_{IN} = -30 dBm/tone, 200 kHz Spacing
Input Return Loss (S11)	-	12	-	dB	-
Output Return Loss (S22)	-	10	-	dB	-
Reverse Isolation (S12)	-	27	-	dB	-
Non-Harmonic Spurious Signals (PSPUR)	-	-	-50	dBm	VSWR 10:1, all phases, unused ports open
Switching Time	-	0.5	-	μs	-
Receiver Bypass Mode: RX2 to Receiver Output Path					
Insertion Loss	-	2	3	dB	-
IP1dB	12	14	-	dBm	1 dB gain compression
IIP3	+28	+34	-	dBm	P_{IN} = 0 dBm/tone, 200 kHz spacing
Input return loss (S11)	10	16	-	dB	-
Output return loss (S22)	10	28	-	dB	-
Switching Time	-	0.5	-	μs	-

Parameter	Minimum	Typical	Maximum	Unit	Condition
Receive and Receive Bypass Modes: ANT to RX1 Path					
Insertion Loss	-	0.4	0.9	dB	-
$IP1dB_{ANT}$	+24	-	-	dBm	1 dB Gain Compression
$IIP3_{ANT}$	-	+35	-	dBm	P_{IN} = 0 dBm/tone, 200 kHz Spacing
Input Return Loss (S11)	10	18	-	dB	-
Output Return Loss (S22)	10	20	-	dB	-
Switching Time	-	0.5	-	μs	-

TX Electrical Parameters

Test Conditions: VCC_RX = VDD1 = 3.3 V, VCC_TX1/2/3 = VDD2 = 3.9 V, PIN = +10 dBm, TC = 25°C, f = 412 to 424 MHz, VPC = 2.25 V, 50Ω source and load impedance, CW input.

Parameter	Minimum	Typical	Maximum	Unit	Condition
TX to ANT path					
Output Power (P_{out})	+29.5	+30.2	-	dBm	TC = + 25°C VCC_TX1/2/3 = 3.9 V
	+29.2	-	+32	dBm	TC = - 30 to +60°C VCC_TX1/2/3 = 3.7 to 4 V
Output Power Control (PCTL)	40	62	-	dB	VPC = 0 V to 2.25 V
Power Added Efficiency (PAE)	-	35	-	%	-
Harmonics (2nd to 10th)	-	-70	-50	dBc	No external filter
	-	-86	-78	dBc	With external filter
Input return loss (S11)	10	16	-	dB	-
Output return loss (S22)	-	13	-	dB	-
Non-harmonic spurious emissions (P_{SPUR})	-	-	-50	dBm	-
Power on-time	-	1.0	-	μs	-
TX to ANT path, transmission bypass mode					
Insertion loss	-	2.0	2.5	dB	-
IP1dB	+24	-	-	dBm	-
IIP3	-	+38	-	dBm	P_{IN} = 0 dBm
Second harmonic (2fo)	-	-80	-40	dBc	P_{IN} = +12dBm
Third harmonic (3fo)	-	-80	-40	dBc	P_{IN} = +12dBm
Transmission bypass path suppression	22	27	-	dB	R_{2F0} @2f0
	30	49	-	dB	R_{3F0} @3f0
Input return loss (S11)	10	24	-	dB	-
Output return loss (S22)	10	24	-	dB	-
Switching time	-	0.5	-	μs	-
ANT to RX1 path					
Isolation (S21)	-	33	-	dB	-
ANT to RX1 path, transmission bypass mode					
Isolation (S21)	18	33	-	dB	-

Typical application circuit

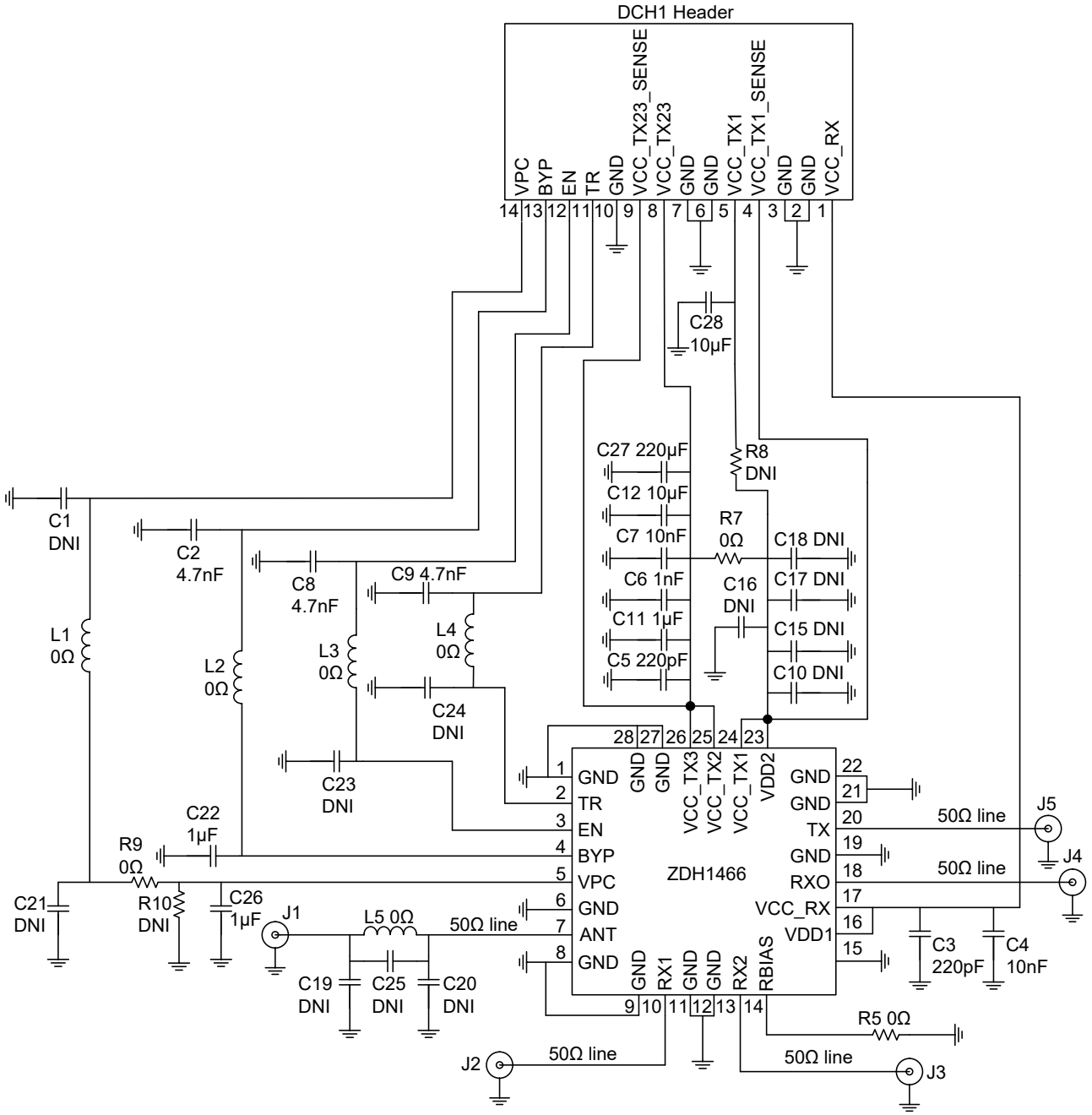

Package diagram

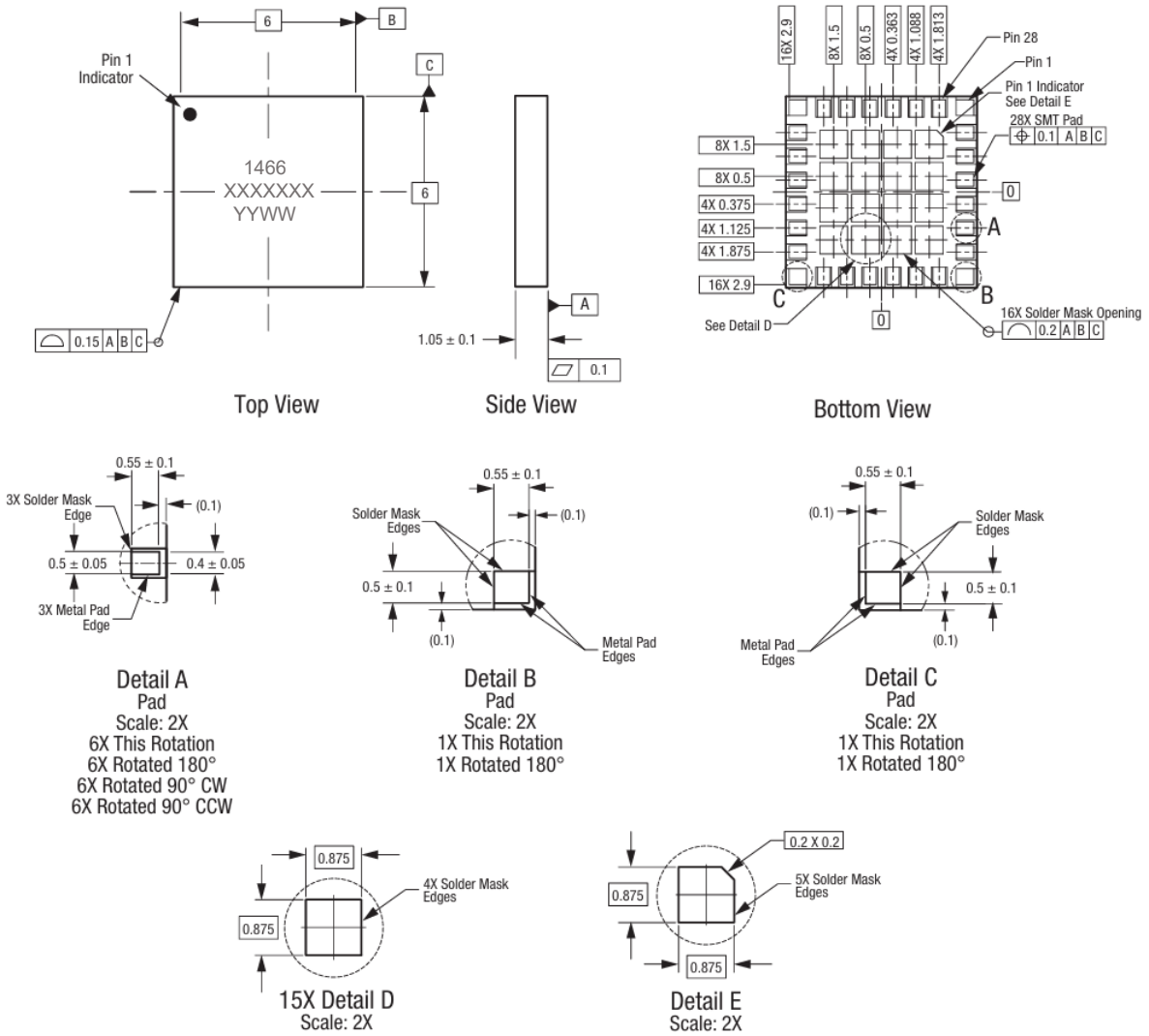

Ordering Information

Model	Marking	Packaging
ZDH1466	1466	LGA6x6-28