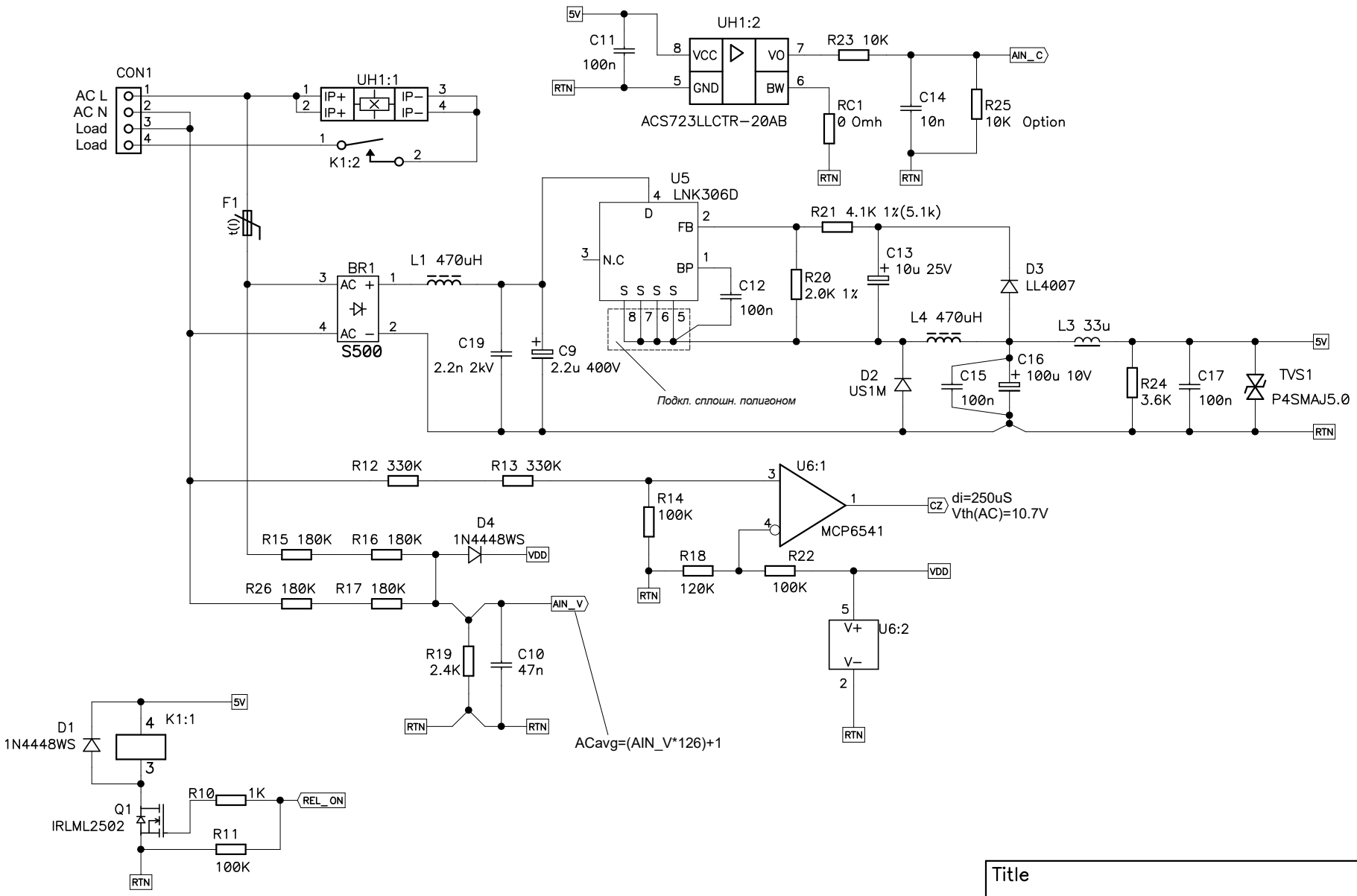

Title		
Size A4	Number	Rev
Designed		Date
Filename Switch_1911.sch		Sheet 2 of 3